PROVIDE SUB-HEADQUARTERS BUILDING

DOT REGION 8, DUTCHESS COUNTY
205 LIME KILN ROAD
EAST FISHKILL, NEW YORK

PROJECT NOS. 45552-C,H,P & E

BID DOCUMENTS - 10/17/2019

PROJECT LOCATION

N

KEY PLAN

NEW YORK STATE OF OPPORTUNITY. | Department of Transportation

NEW YORK STATE OF OPPORTUNITY. | Office of General Services

DESIGN & CONSTRUCTION

3/17/2020 4:57:56 PM
C:\Users\Shackett\Documents\Revit Local Files\2018 DOT Sub Headquarter Bldg_shackett.rvt
36x24 PLOT SHEET

DRAWING LIST

GENERAL (ALL CONTRACTS)

G-001	COVER SHEET
G-002	NOTES, SYMBOLS & ABBREVIATIONS
G-003	CODE COMPLIANCE AND LIFE SAFETY PLANS
G-004	CODE COMPLIANCE AND LIFE SAFETY

CONSTRUCTION CONTRACT

CG-100	CIVIL NOTES AND BASELINE TIES AND BENCHMARKS
C-001	EXISTING CONDITIONS
C-002	EXISTING CONDITIONS
D-100	REMOVAL PLANS
D-101	REMOVAL PLANS
C-100	SITE LAYOUT/ SITE PLANS/ UTILITY PLANS
C-101	SITE LAYOUT/ SITE PLANS/ UTILITY PLANS
C-102	GRADING/ EROSION AND SEDIMENT CONTROL PLANS
C-103	GRADING/ EROSION AND SEDIMENT CONTROL PLANS
C-300	ROAD PROFILE/ UTILITY PROFILES
C-301	OIL/WATER SEPARATOR AND SEPTIC SYSTEM PROFILES
C-302	POTABLE WATER TANK AND FIRE SUPPRESSION TANK CROSS SECTIONS
C-303	UTILITY PROFILES
C-500	SITE DETAILS
C-501	STORMWATER AND SANITARY DETAILS
C-502	STORMWATER MANAGEMENT DETAILS
C-503	EROSION AND SEDIMENT CONTROL/ DRAINAGE DETAILS
C-504	FENCE DETAILS
C-505	WATER TANK DETAILS
C-506	BIORETENTION AREA 1 SECTION DETAILS
C-507	SANITARY DETAILS
C-508	ABSORPTION FIELD DETAILS
C-509	WATER DETAILS
C-510	DIESEL FUEL TANK PLAN AND SECTION
S-001	DESIGN DATA AND GENERAL NOTES
S-002	NOTES
S-101	FOUNDATION PLAN
S-102	FLOOR AND ROOF FRAMING PLAN
S-103	ROOF FRAMING PLAN
S-104	PUMPHOUSE PLANS AND DETAILS
S-301	FOUNDATION SECTIONS AND DETAILS
S-302	FOUNDATION SECTIONS AND DETAILS
S-303	SECTIONS
S-401	SECTIONS
A-001	PARTITION TYPES AND ROOM FINISH SCHEDULE
A-101	FIRST FLOOR PLAN
A-102	FIRST FLOOR REFLECTED CEILING PLAN
A-103	ROOF PLAN
A-104	PUMP HOUSE PLAN, SECTIONS AND DETAILS
A-201	EXTERIOR ELEVATIONS
A-202	EXTERIOR ELEVATIONS
A-300	BUILDING SECTIONS
A-310	WALL SECTIONS
A-401	ENLARGED OFFICE PLAN AND REFLECTED CEILING PLAN
A-402	ENLARGED TOILET ROOMS PLAN
A-403	INTERIOR ELEVATIONS AND DETAILS
A-410	MEZZANINE PLAN AND DETAILS
A-500	DETAILS
A-501	CANOPY DETAILS
A-600	DOOR SCHEDULES AND DETAILS
A-601	WINDOW DETAILS

HVAC CONTRACT

M-001	SYMBOLS, NOTES, & ABBREVIATIONS
M-101	VENTILATION PLAN
M-102	PIPING PLAN
M-103	RADIANT FLOOR PLAN
M-104	DETAIL PLANS
M-201	MECHANICAL DETAILS
M-202	MECHANICAL DETAILS
M-203	MECHANICAL DETAILS
M-204	MECHANICAL DETAILS
M-301	SCHEDULES

PLUMBING CONTRACT

P-001	SYMBOLS, NOTES, & ABBREVIATIONS
P-101	SANITARY WASTE & VENT PLAN
P-102	DOMESTIC WATER PLAN
P-103	COMPRESSED AIR & GAS PLAN
P-104	PLUMBING ENLARGED PLANS
P-105	MEZZANINE PLAN AND DETAILS
P-106	PUMP HOUSE POTABLE WATER PIPING AND DETAILS
FP-001	FIRE PROTECTION SYMBOLS, NOTES, & ABBREVIATIONS
FP-101	FIRE PROTECTION PLAN
FP-102	FIRE PROTECTION OFFICE PLAN
FP-103	FIRE PROTECTION DETAILS

ELECTRICAL CONTRACT

E-001	SYMBOLS, NOTES, AND ABBREVIATIONS
E-100	SITE PLAN
E-101	LIGHTING PLAN
E-102	POWER AND SYSTEMS PLAN
E-103	ELECTRICAL MEZZANINE PLAN
E-104	ELECTRICAL ENLARGED PLANS
E-105	ELECTRICAL PUMP HOUSE PLANS
E-201	EQUIPMENT SCHEDULES
E-202	LUMINAIRE & CONTROL SCHEDULE
E-203	PANEL SCHEDULES
E-301	ONE LINE DIAGRAM
E-401	ELECTRICAL DETAILS
E-402	ELECTRICAL DETAILS
E-403	ELECTRICAL DETAILS
E-404	ELECTRICAL DETAILS
E-405	ELECTRICAL DETAILS
E-406	ELECTRICAL CODE COMPLIANCE

REGISTERED ARCHITECT
DAVID L. WELLS
037599
STATE OF NEW YORK
03/20/2020

TO THE BEST OF MY KNOWLEDGE, BELIEF & PROFESSIONAL JUDGEMENT THESE PLANS AND SPECIFICATIONS ARE IN COMPLIANCE WITH THE BUILDING, PLUMBING, MECHANICAL, FIRE AND ENERGY CONSERVATION CONSTRUCTION CODE OF NEW YORK STATE.

DRAWING NUMBER:
G-001

ARCHITECTURAL ABBREVIATIONS

A

ABV:	ABOVE
ACC:	ACCESS
ACOUST:	ACOUSTICAL
ACP:	ACOUSTICAL CEILING PANEL
ACT:	ACOUSTIC CEILING TILE
ACR:	ACRYLIC
ACST:	ACOUSTIC
ACT:	ACOUSTICAL TILE
ADH:	ADHESIVE
ADJ:	ADJUST, ADJUSTABLE, ADJACENT
AFF:	ABOVE FINISHED FLOOR
AGGR:	AGGREGATE
ALT:	ALTERNATE
ALUM:	ALUMINUM
ANOD:	ANODIZED
APPROX:	APPROXIMATE
AU:	ALIPHATIC URETHANE MARINE

B

BF:	BOARD FOOT
BIT:	BITUMINOUS
BLDG:	BUILDING
BLKG:	BLOCKING
BOT:	BOTTOM
BPL:	BEARING PLATE
BRG:	BEARING
BRZ:	BRONZE
BS:	BOTH SIDES
BTU:	BRITISH THERMAL UNIT
BUR:	BUILT-UP ROOF

C

C:	CONSTRUCTION CONTRACT
CC	CONSTRUCTION CONTRACTOR
C/C:	CENTER TO CENTER
CAB:	CABINET
CPT:	CARPET
CAV:	CAVITY
CCW:	COUNTER CLOCKWISE
CCTV:	CLOSED CIRCUIT TV
CEM:	CEMENT
CER:	CERAMIC
CF:	CUBIC FEET
CFMF:	COLD FORM METAL FRAMING
CHAM:	CHAMFER
CJ:	CONTROL JOINT
CK:	CAULKING
CL:	CENTERLINE
CLG:	CEILING
CLKG:	CAULKING
CLR:	CLEAR
CLR OPG:	CLEAR OPENING
CMT:	CERAMIC MOSAIC TILE
CMU:	CONCRETE MASONRY UNIT
COL.:	COLUMN
CONC:	CONCRETE
CONSTR:	CONSTRUCTION
CONT:	CONTINUOUS
CONTR:	CONTRACTOR
COORD:	COORDINATE
COP:	COPPER
CPR:	COPPER
CPT:	CARPET
CT:	CERAMIC TILE
CW:	CLOCKWISE

D

DBL:	DOUBLE
DEG:	DEGREE
DEMO:	DEMOLITION
DF:	DRINKING FOUNTAIN
DIAG:	DIAGONAL
DIA:	DIAMETER
DIAM:	DIAMETER
DIFF:	DIFFUSER
DN:	DOWN
DR:	DOOR
DS:	DOWNSPOUT
DWG:	DRAWING
DWGS:	DRAWINGS
DWR:	DRAWER

E

E:	ELECTRICAL
EA:	EACH
EB:	EXPANSION BOLT
EE:	EACH END
EF:	EACH FACE
EIFS:	EXTERIOR INSULATION AND FINISH SYSTEM
EJ:	EXPANSION JOINT
EL:	ELEVATION, ELEVATOR
ELEC:	ELECTRICAL
ELEV:	ELEVATOR, ELEVATION
ENCL:	ENCLOSURE
EPDM:	ETHYLENE PROPYLENE DIENE MONOMER
EQ:	EQUAL
EQUIP:	EQUIPMENT
ETR:	EXISTING TO REMAIN
EW:	EACH WAY
EXG:	EXISTING
EXH:	EXHAUST
EXIST:	EXISTING
EXP:	EXPOSED

F

FAC:	FACTORY
FB:	FACE BRICK
FD:	FLOOR DRAIN
FDC:	FIRE DEPARTMENT CONNECTION
FDN:	FOUNDATION
FDTN:	FOUNDATION
FE:	FIRE EXTINGUISHER
FEC:	FIRE EXTINGUISHER CABINET
FF:	FINISHED FLOOR
FFE:	FINISHED FLOOR ELEVATION
FF&E:	FIXTURES, FURNISHINGS & EQUIPMENT
FFL:	FINISHED FLOOR LINE
FGL:	FIBERGLASS
FHC:	FIRE HOSE CABINET
FIN:	FINISH, FINISHED
FIXT:	FIXTURE
FL:	FLOOR
FLR:	FLOOR
FO:	FINISHED OPENING
FOF:	FACE OF FINISH
FOS:	FACE OF STUDS
FP:	FIREPROOF
FRP:	FIBERGLASS REINFORCED PLASTIC PANELS
FRT:	FIRE RETARDANT
FT:	FOOT, FEET,
FTG:	FOOTING, FITTING
FURN:	FURNISH, FURNITURE
FURR:	FURRING

G

GA:	GAUGE, GAGE
GALV:	GALVANIZED
GL:	GLASS
GL BLK:	GLASS BLOCK
GRND:	GROUND
GRTG:	GRATING
GVL:	GRAVEL
GYP:	GYPSUM
GYP BD:	GYPSUM BOARD
GWB:	GYPSUM WALL BOARD

H

H:	HVAC (HEATING, VENTILATION & AIR CONDITIONING) CONTRACT
HBGC:	HIGH BUILD GLAZE COATING
HDCP:	HANDICAPPED (BETTER CALLED "ACCESSIBLE")
HDW:	HARDWARE
HDWD:	HARDWOOD
HGT.	HEIGHT
HM:	HOLLOW METAL
HORIZ:	HORIZONTAL
HR:	HOUR
HT:	HEIGHT
HWD:	HARDWOOD

I

ID:	INSIDE DIAMETER
IE:	IN EXAMPLE
IEAS:	INTEGRAL EMERY AGGREGATE SURFACE
IN:	INCH
INCL:	INCLUDE
INFO:	INFORMATION
INSTL:	INSTALL
INSUL:	INSULATION
INT:	INTERIOR
INTERM:	INTERMEDIATE

J

JAN:	JANITOR
JC:	JANITOR'S CLOSET
JT:	JOINT

L

LAB:	LABORATORY, LABOR
LAV:	LAVATORY
LB:	POUND (WEIGHT)
LBL:	LABEL
LINO:	LINOLEUM
LNTL:	LINTEL

M

MAINT:	MAINTENANCE
MAN:	MANUAL
MAR:	MARBLE
MARB:	MARBLE
MAS:	MASONRY
MAT:	MATERIAL
MATL:	MATERIAL
MAX:	MAXIMUM
MECH:	MECHANICAL
MEMB:	MEMBRANE
MFD:	MANUFACTURED
MFG:	MANUFACTURER, MANUFACTURING
MFR:	MANUFACTURE, MANUFACTURER
MI:	MALLEABLE IRON, MILES
MIKE:	MICROPHONE
MIN:	MINIMUM
MIR:	MIRROR
MISC:	MISCELLANEOUS
MK:	MARK
ML&P:	METAL LATH & PLASTER
MLD:	MOLDING
MLDG:	MOLDING
MM:	MILLIMETER
MMB:	MEMBRANE
MO:	MASONRY OPENING
MOD:	MODULE
MONO:	MONOLITHIC
MOV:	MOVABLE
MP:	METAL ACOUSTICAL PANEL
MPS:	MEDIUM PRESSURE STEAM
MR:	MOP RECEPTOR
MRD:	METAL ROOF DECK
MT:	MOUNT, MOUNTED
MTD:	MOUNTED
MTL:	MATERIAL, METAL
MTR:	MOTOR
MUL:	MULLION
MULL:	MULLION
MV:	MERCURY VAPOR
MWP:	MAXIMUM WORKING PRESSURE
MWK:	MILLWORK

N

N:	NORTH, NITROGEN
NAP:	NAPKIN
NAT:	NATURAL
NC:	NORMALLY CLOSED, NOISE CRITERIA
NEC:	NATIONAL ELECTRICAL CODE
NEUT:	NEUTRAL
NFWH:	NON-FREEZE WALL HYDRANT
NI:	NICKEL
NIC:	NOT IN CONTRACT
NMT:	NON-METALLIC
NO:	NUMBER, NORMALLY OPEN
NOM:	NOMINAL
NR:	NOISE REDUCTION
NRC:	NOISE REDUCTION COEFFICIENT
NTS:	NOT TO SCALE

O

OB:	OBSCURE
OBS:	OBSCURE
OC:	ON CENTER
OCC:	OCCUPANCY
OD:	OUTSIDE DIAMETER
OF:	OUTSIDE FACE
OFF:	OFFICE
OH:	OVERHEAD
OHD:	OVERHEAD DOOR
OPNG:	OPENING
OPP:	OPPOSITE
OPP H:	OPPOSITE HAND

P

P:	PLUMBING CONTRACT
P. LAM:	PLASTIC LAMINATE
PAR:	PARALLEL
PBD:	PARTICLE BOARD
PERIM:	PERIMETER
PERP:	PERPENDICULAR
PF:	FACTORY PRE-FINISH
PL:	PLATE
PLBG:	PLUMBING
PLF:	PER LINEAR FOOT
PLYWD:	PLYWOOD
PLUMB:	PLUMBING
PR:	PAIR
PREFAB:	PREFABRICATED
PRES:	PRESSURE
PRESS:	PRESSURE
PRMLD:	PREMOLDED
PRTN:	PARTITION
PSF:	POUNDS PER SQUARE FOOT
PSI:	POUNDS PER SQUARE INCH
PNT:	PAINT
PT:	PRESSURE TREATED
PTD:	PAINTED, PAPER TOWEL DISPENSER
PTD/R:	COMBINATION PAPER TOWEL DISPENSER/RECEPTACLE
PTN:	PARTITION

Q

QUAL:	QUALITY
QT:	QUARRY TILE, QUART
QTY:	QUANTITY

R

RB:	RUBBER BASE
RCP:	REFLECTED CEILING PLAN
RD:	ROOF DRAIN, ROUND, RECEPTACLE DISTRIBUTION PANEL
REBAR:	REINFORCING BAR
REF:	REFER, REFERENCE, REFRIGERATOR
REFL:	REFLECTED,
REFR:	REFRIGERATE, REFRIGERATOR
REINF:	REINFORCEMENT, OR REINFORCE
REQ:	REQUIRED
RESIL:	RESILIENT
RF:	ROOF
RGH:	ROUGH
RGH OPNG:	ROUGH OPENING
RO:	ROUGH OPENING
RT:	RUBBER TILE

S

SALV:	SALVAGE
SCHED:	SCHEDULE
SECT:	SECTION
SF:	SQUARE FOOT
SFS:	SEAMLESS FLOOR SYSTEM
SHR:	SHOWER
SHT:	SHEET
SIM:	SIMILAR
SPEC:	SPECIFICATION, SPECIFICATIONS
SPECS:	SPECIFICATIONS
SQ:	SQUARE
SS:	STAINLESS STEEL
STC:	SOUND TRANSMISSION CLASS
STD:	STANDARD
STL:	STEEL
STOR:	STORAGE
STRT:	STRAIGHT
STRUC:	STRUCTURAL
STRUCT:	STRUCTURAL
SUR:	SURFACE
SUSP:	SUSPENDED, SUSPEND

T

T&B:	TOP AND BOTTOM
T&G:	TONGUE & GROOVE
TB:	TOWEL BAR
TD:	TRENCH DRAIN
TERR:	TERRAZZO
THK:	THICK, THICKNESS
THRU:	THROUGH
TLT:	TOILET
TOG:	TOP OF GRADE
TPD:	TOILET PAPER DISPENSER
TPH:	TOILET PAPER HOLDER
TPTN:	TOILET PARTITION
TYP:	TYPICAL
TZ:	TERRAZZO

U

UNFIN:	UNFINISHED
UNO:	UNLESS NOTED OTHERWISE
UON:	UNLESS OTHERWISE NOTED
UP:	UNPAINTED
UR:	URINAL

V

VAT:	VINYL ASBESTOS TILE
VBC:	VINYL BASE (COVED)
VCT:	VINYL COMPOSITION TILE
VERT:	VERTICAL
VEST:	VESTIBULE
VIF:	VERIFY IN THE FIELD
VT:	VINYL TILE
VTR:	VENT THROUGH ROOF
VWC:	VINYL WALL COVERING

W

W/:	WITH
W/O:	WITHOUT
WAINS:	WAINSCOT
WC:	WATER CLOSET
WD:	WOOD
WH:	WATER HEATER

MATERIAL SYMBOLS

CONCRETE MASONRY UNITS (CMU)	WOOD (FINISHED)	RIGID INSULATION
CONCRETE	WOOD (ROUGH)	BATT. OR LOOSE INSULATION
BRICK	WOOD (BLOCKING)	EARTH
CEMENT, SAND, GROUT, PLASTER, OR GYPSUM WALL BOARD	PARTICLE BOARD	CARPET
STEEL	PLYWOOD	STONE, GRAVEL, OR POROUS FILL

ARCHITECTURAL DRAWINGS SYMBOLS

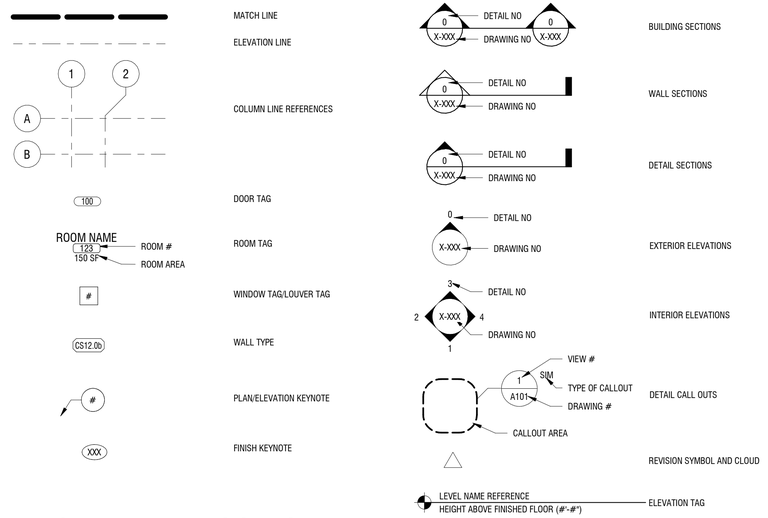

TYPICAL PLAN DIMENSIONING

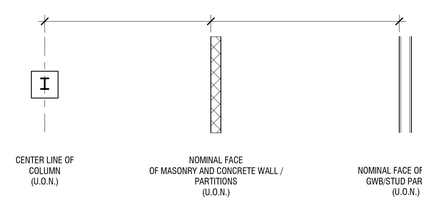

LINE TYPES

- VISIBLE ITEMS
- CENTER LINE OR COLUMN GRID
- HIDDEN OR NOT IN CONTRACT
- BREAK LINE
- OVERHEAD

WALL/ PARTITION DESIGNATIONS

- BRICK FACE
- C.M.U. WALL / PARTITION - REFER TO PARTITION TYPES
- METAL STUD PARTITION - REFER TO PARTITION TYPES

GENERAL CONSTRUCTION NOTES:

1. PROVIDE FOR ALL MATERIALS, CONSTRUCTION METHODS AND CRAFTSMANSHIP.
2. VERIFY ALL CONDITIONS, REQUIREMENTS, NOTES, CODES AND DIMENSIONS PRIOR TO THE START OF CONSTRUCTION AND NOTIFY THE DIRECTOR'S REPRESENTATIVE IF CONDITIONS VARY FROM THOSE SHOWN ON THE DOCUMENTS.
3. PROVIDE ADEQUATE SUPPORT OF FOUNDATION WALLS, LOAD BEARING WALLS AND PARTITIONS DURING CONSTRUCTION.
4. WORK SHALL BE THOROUGHLY COORDINATED WITH TRADES. DETERMINE THE EXACT ROUTE AND LOCATION OF UTILITIES, MATERIALS AND EQUIPMENT BEFORE FABRICATION AND INSTALLATION.
5. PROVIDE ALL BLOCKING, FURRING AND SHIMMING FOR INSTALLATION AND COMPLETION OF WORK.
6. ALL WORK SHALL BE PLUMB, LEVEL AND SQUARE.
7. VERIFY ALL DIMENSIONS BEFORE ORDERING MATERIAL OR DOING WORK. NO EXTRA COMPENSATION OR CHARGES WILL BE ACCEPTED DUE TO DIFFERENCES BETWEEN THE ACTUAL MEASUREMENTS AND MEASUREMENTS INDICATED ON THE DRAWINGS.
8. PROVIDE SEALANT AT ALL JOINTS BETWEEN DIFFERENT MATERIALS. ALL SEALANTS TO BE TYPE 1B UNLESS OTHERWISE NOTED.

GENERAL ARCHITECTURAL NOTES

1. DIMENSIONS NOTED AS "CLEAR" ARE TO FINISHED SURFACE AND ARE CRITICAL FOR ACCESSIBILITY REQUIREMENTS OR BUILT-IN FURNISHINGS.
2. FIELD VERIFY FINISHED DIMENSIONS AND CLEARANCES IN SPACES INDICATED TO RECEIVE BUILT-IN FURNISHINGS OR CASEWORK PRIOR TO FABRICATION.
3. ALL VERTICAL CONCRETE SURFACES WHICH WILL BE EXPOSED TO VIEW UPON COMPLETION OF WORK SHALL RECEIVE A SMOOTH RUBBED FINISH.
4. SEALANT SHALL BE PROVIDED AT THE INTERIOR AND EXTERIOR PERIMETER OF ALL WINDOWS, DOOR FRAMES, LOUVERS OR OTHER ITEMS INSERTED IN AN EXTERIOR WALL.
5. WOOD USED FOR BLOCKING OR OTHER PURPOSES ON OR ABOVE THE ROOF DECK, WITHIN 2'-0" OF GRADE AND IN OTHER LOCATIONS OUTSIDE THE BUILDING ENVELOPE WHERE EXPOSED TO THE WEATHER SHALL BE PRESSURE TREATED LUMBER OR PLYWOOD. SEPARATE ALL P.T. LUMBER OR PLYWOOD FROM ALL METALS WITH A SLIP-SHEET.
6. INSTALL ALL WORK AS INDICATED AND VERIFY EXACT LOCATION AND ELEVATIONS ON THE JOB.
7. DO NOT SCALE DRAWINGS. REFER TO DIMENSIONS AND SPECIFIED MATERIALS. CONTACT THE DIRECTOR'S REPRESENTATIVE IF ADDITIONAL DIMENSIONS ARE REQUIRED.

CONSTRUCTION SAFEGUARDS NOTES

A. SCOPE. THE SAFETY OF THE CONSTRUCTION AREA AND ADJACENT PUBLIC AND PRIVATE PROPERTIES SAFETY SHALL BE PROTECTED DURING CONSTRUCTION AND REMOVALS AS FOLLOWS, IN ACCORDANCE WITH THE 2015 INTERNATIONAL EXISTING BUILDING CODE (IEBC) CHAPTER 15, 2015 INTERNATIONAL BUILDING CODE (IBC) CHAPTER 33, AND THE 2015 INTERNATIONAL FIRE CODE (IFC) CHAPTER 33, AS AMENDED BY NYS FIRE PROTECTION AND UNIFORM CODE (UNIFORM CODE). COMPLIANCE WITH NFPA 241 IS REQUIRED FOR ITEMS NOT SPECIFICALLY ADDRESSED. THIS SPECIFICATION PROSCRIBES MINIMUM SAFEGUARDS FOR CONSTRUCTION TO PROVIDE REASONABLE SAFETY TO LIFE AND PROPERTY FROM FIRE DURING SUCH OPERATIONS.

B. CONSTRUCTION INCLUDES ANY CONSTRUCTION, REMOVALS, REMODELING, ALTERATIONS, REPAIRS OR ADDITIONS TO ANY BUILDING OR STRUCTURE.

C. MAINTENANCE OF SAFE CONDITIONS, REQUIRED SAFETY ELEMENTS SUCH AS EXITS, EXISTING STRUCTURAL MEMBERS, FIRE PROTECTION DEVICES AND SANITARY SAFEGUARDS SHALL BE MAINTAINED AT ALL TIMES, EXCEPT WHERE THE BUILDING IS NOT OCCUPIED OR WHERE SUCH REQUIRED ELEMENTS ARE BEING ALTERED OR REPAIRED AND ADEQUATE SUBSTITUTE PROVISIONS ARE MADE.

D. FIRE SAFETY DURING CONSTRUCTION AND REMOVALS. FIRE SAFETY SHALL COMPLY WITH THE APPLICABLE REQUIREMENTS OF THE UNIFORM CODE, INCLUDING IEBC IFC CHAPTER 33.
   1. FIRE EXTINGUISHERS. PROVIDE PORTABLE FIRE EXTINGUISHERS FOR PROTECTION DURING CONSTRUCTION AND DEMOLITION AT EACH STAIRWAY ON EACH FLOOR LEVELS WHERE COMBUSTIBLE MATERIALS HAVE ACCUMULATED AND IN EVERY STORAGE AND CONSTRUCTION SHED. EXTINGUISHER SHALL COMPLY WITH IFC SECTION 906, SIZED FOR ORDINARY HAZARD UNLESS GREATER HAZARD IS SPECIFIED. ADDITIONAL PORTABLE FIRE EXTINGUISHER SHALL BE PROVIDED WHERE SPECIAL HAZARD EXISTS, SUCH AS THE STORAGE AND USE OF FLAMMABLE AND COMBUSTIBLE LIQUIDS.
   2. WATER SUPPLY FOR FIRE PROTECTION. AN APPROVED WATER SUPPLY FOR FIRE PROTECTION, EITHER TEMPORARY OR PERMANENT, SHALL BE AVAILABLE WHEN COMBUSTION MATERIAL IS ON THE SITE.
   3. FIRE WATCH. WHERE SPECIFIED HEREIN, QUALIFIED PERSONNEL ACTING AS ON-SITE FIRE WATCH SHALL HAVE AN APPROVED MEANS TO NOTIFY THE FIRE DEPARTMENT, AND THEIR SOLE DUTY SHALL BE TO PERFORM CONSTANT PATROLS AND WATCH FOR THE OCCURRENCE OF FIRE.
   4. ANY BURNING, CUTTING, OR WELDING SHALL REQUIRE PERMIT AND APPROVAL.
   5. TEMPORARY ELECTRICAL INSTALLATIONS SHALL COMPLY WITH NFPA 70.

E. MATERIAL HANDLING. EQUIPMENT AND MATERIALS SHALL BE STORED AND PLACED, AND WASTE SHALL BE REMOVED, SO AS NOT TO ENDANGER THE PERSONS OR PROPERTY OR TO IMPEDE A MEANS OF EGRESS. PLACE MATERIALS AND WASTE SO AS NOT TO OBSTRUCT ACCESS TO FIRE HYDRANTS, STANDPIPES, FIRE EXTINGUISHERS, FIRE OR POLICE ALARM BOXES, CATCH BASINS, MANHOLES, RELEVANT UTILITY STRUCTURES, TRAFFIC OR OBSERVATION OF TRAFFIC SIGNALS. COMBUSTIBLE DEBRIS SHALL NOT BE ACCUMULATED ON SITE, AND SHALL BE REMOVED AT THE END OF EACH WORK SHIFT. RUBBISH CONTAINERS WITH A CAPACITY EXCEEDING 5.33 CUBIC FEET (40 GALLONS OR 0.15 CUBIC METERS) SHALL HAVE TIGHT-FITTINGS OR SELF CLOSING LIDS, AND SHALL BE CONSTRUCTED OF NONCOMBUSTIBLE MATERIAL THAT MEETS IFC SECTION 3304.2.3 (2). MATERIALS SUSCEPTIBLE TO SPONTANEOUS IGNITION SHALL BE STORED IN A LISTED DISPOSAL CONTAINER.

TO THE BEST OF MY KNOWLEDGE, BELIEF, AND PROFESSIONAL JUDGEMENT, THESE PLANS AND SPECIFICATIONS ARE IN COMPLIANCE WITH THE 2016 ENERGY CODE AND THE 2016 SUPPLEMENT TO THE NEW YORK STATE ENERGY CONSERVATION CONSTRUCTION CODE.

NEW YORK STATE OF OPPORTUNITY. Office of General Services

DESIGN & CONSTRUCTION

CONSULTANT:

LaBella Powered by partnership.

WARNING:

THE ALTERATION OF THIS MATERIAL IN ANY WAY, UNLESS DONE UNDER THE DIRECTION OF A COMPARABLE PROFESSIONAL, I.E. ARCHITECT FOR AN ARCHITECT, ENGINEER FOR AN ENGINEER OR LANDSCAPE ARCHITECT FOR A LANDSCAPE ARCHITECT, IS A VIOLATION OF THE NEW YORK STATE EDUCATION LAW AND/OR REGULATIONS AND IS A CLASS 'A' MISDEMEANOR.

REGISTERED ARCHITECT DAVID L. WELLS 037599 STATE OF NEW YORK

CONTRACT: ALL

TITLE: PROVIDE SUB-HEADQUARTERS BUILDING

LOCATION: DOT REGION 8, DUTCHESS COUNTY 205 LIME KILN RD. EAST FISHKILL, NEW YORK

CLIENT: NEW YORK STATE DEPARTMENT OF TRANSPORTATION

MARK	DATE	DESCRIPTION
	10/17/2019	BID DOCUMENTS

PROJECT NUMBER:	45552-C,H,P & E
DESIGNED BY:	LAB
DRAWN BY:	WM
FIELD CHECK:	
APPROVED:	

SHEET TITLE: NOTES, SYMBOLS & ABBREVIATIONS

DRAWING NUMBER: G-002

2/28/2020 2:20:35 PM
C:\Users\Shackett\Documents\Revit Local Files\2018 DOT Sub Headquarter Bldg_shackett.rvt
36x24 PLOT SHEET

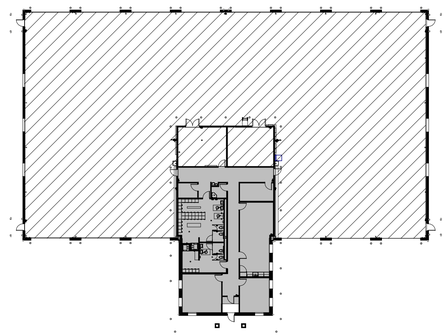

3 G-003 FIRST FLOOR BUILDING AREA PLAN
SCALE: 1/32" = 1'-0"

BUILDING AREA LEGEND

- BUSINESS (B) 2,710 SF
- LOW HAZARD STORAGE (S-2) 16,652 SF

LIFE SAFETY LEGEND

- EXIT
- EXC: # / EXL: # — EXIT CAPACITY - CAPACITY OF DOOR OR OTHER EGRESS COMPONENT; EXIT LOAD - NUMBER OF OCCUPANTS UTILIZING EGRESS COMPONENT
- ACCESSIBLE
- FIRE EXTINGUISHER (75' MAX. TRAVEL DISTANCE)
- TRUSS IDENTIFICATION SIGNAGE REFER TO DRAWING G-004
- ## OCC — OCCUPANT LOAD

EXIT TRAVEL DISTANCE
- MOST REMOTE POINT
- LOGICAL TRAVEL PATH
- EATD = 123'
- LENGTH OF EXIT TRAVEL DISTANCE (IN FEET)

COMMON PATH OF TRAVEL
- MOST REMOTE POINT
- LOGICAL TRAVEL PATH
- CPOT = 12'
- POINT WHERE (2) PATHS OF EGRESS TRAVEL BECOME AVAILABLE
- LENGTH OF COMMON PATH OF TRAVEL (IN FEET)
- 0'-0" — DEAD END CORRIDOR DISTANCE (50'-0" MAX.)

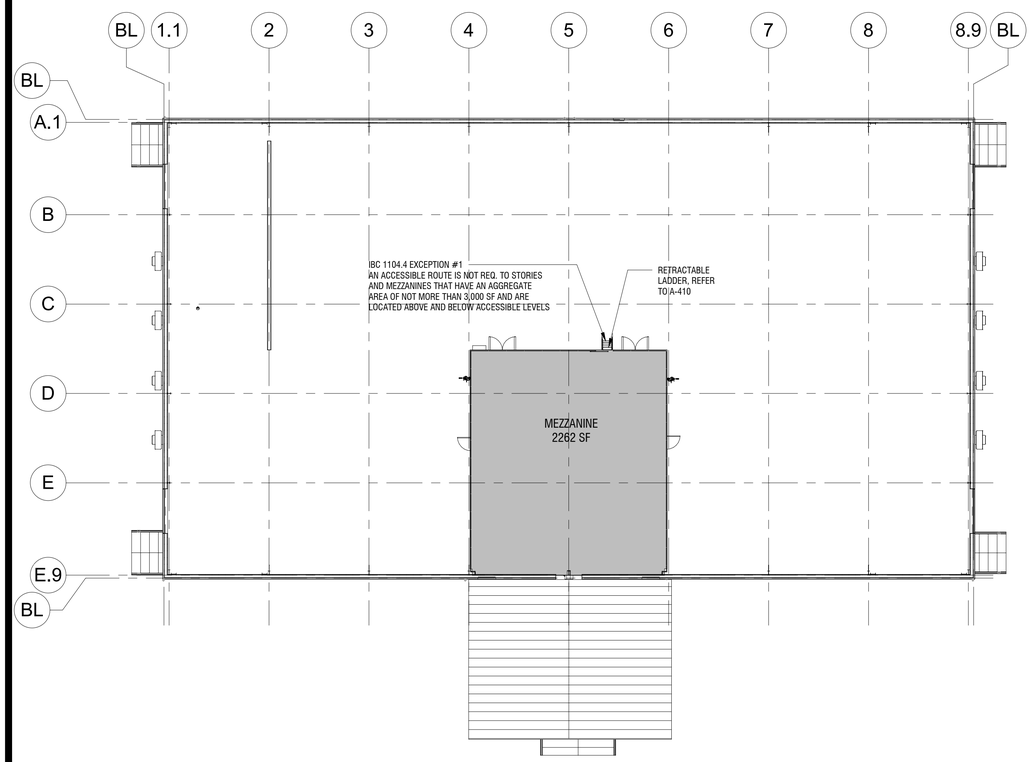

2 G-003 MEZZANINE LIFE SAFETY PLAN
SCALE: 1/16" = 1'-0"

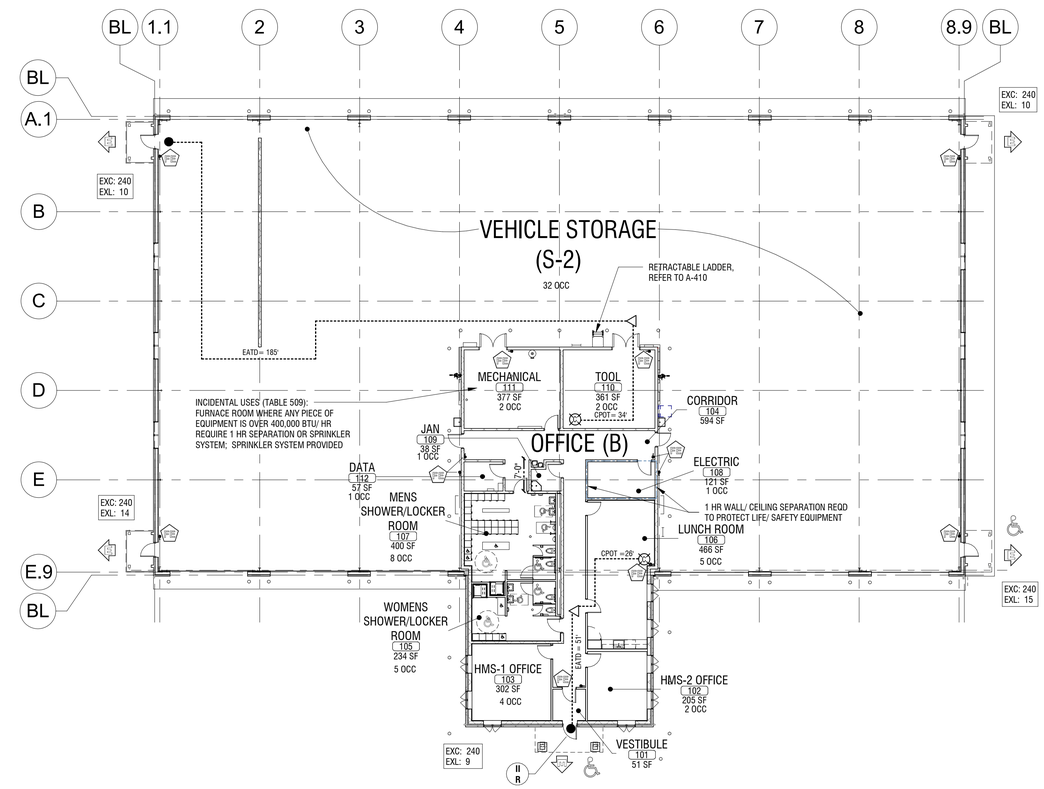

1 G-003 FIRST FLOOR FIRE & LIFE SAFETY PLAN
SCALE: 1/16" = 1'-0"

NEW YORK STATE OF OPPORTUNITY. Office of General Services
DESIGN & CONSTRUCTION

CONSULTANT:
LaBella Powered by partnership.

WARNING:
THE ALTERATION OF THIS MATERIAL IN ANY WAY, UNLESS DONE UNDER THE DIRECTION OF A COMPARABLE PROFESSIONAL, I.E. ARCHITECT FOR AN ARCHITECT, ENGINEER FOR AN ENGINEER OR LANDSCAPE ARCHITECT FOR A LANDSCAPE ARCHITECT, IS A VIOLATION OF THE NEW YORK STATE EDUCATION LAW AND/OR REGULATIONS AND IS A CLASS 'A' MISDEMEANOR.

REGISTERED ARCHITECT DAVID L. WELLS 037599 STATE OF NEW YORK

CONTRACT: ALL

TITLE: PROVIDE SUB-HEADQUARTERS BUILDING

LOCATION: DOT REGION 8, DUTCHESS COUNTY
205 LIME KILN RD.
EAST FISHKILL, NEW YORK

CLIENT: NEW YORK STATE DEPARTMENT OF TRANSPORTATION

MARK	DATE	DESCRIPTION
	10/17/2019	BID DOCUMENTS

PROJECT NUMBER:	45552-**C,H,P & E**
DESIGNED BY:	DMD
DRAWN BY:	DMD
FIELD CHECK:	
APPROVED:	

SHEET TITLE: CODE COMPLIANCE AND LIFE SAFETY PLANS

DRAWING NUMBER: **G-003**

2/28/2020 2:20:43 PM
C:\Users\SHackett\Documents\Revit Local Files\2018 DOT Sub Headquarter Bldg_shackett.rvt
36x24 PLOT SHEET

APPLICABLE CODES

BUILDING CODE	INTERNATIONAL BUILDING CODE 2015 (IBC) - UNIFORM CODE SUPPLEMENTS 2017
STRUCTURAL	ACI 318-14 BUILDING CODE REQUIREMENTS FOR STRUCTURAL CONCRETE ACI 530-13 BUILDING CODE REQUIREMENTS FOR MASONRY STRUCTURES ASCE 7-10 MINIMUM DESIGN LOADS FOR BUILDINGS AND OTHER STRUCTURES AISC 360-10 SPECIFICATION FOR STRUCTURAL STEEL BUILDINGS
ACCESSIBILITY	ICC/ANSI A117.1-09 ACCESSIBLE AND USABLE BUILDINGS AND FACILITIES INTERNATIONAL BUILDING CODE 2015 (IBC) - UNIFORM CODE SUPPLEMENTS 2017
ENERGY CONSERVATION	INTERNATIONAL ENERGY CONSERVATION CODE 2015- NYS UNIFORM CODE SUPPLEMENT 2016
FIRE:	INTERNATIONAL FIRE CODE 2015 (IBC) - NYS UNIFORM CODE SUPPLEMENT 2017
MECHANICAL:	INTERNATIONAL MECHANICAL CODE 2015 (IBC) - NYS UNIFORM CODE SUPPLEMENT 2017
PLUMBING:	INTERNATIONAL PLUMBING CODE 2015 (IBC) - NYS UNIFORM CODE SUPPLEMENT 2017
ELECTRICAL:	NFPA 70 - 2014

BUILDING DATA

		CODE REFERENCE
USE AND OCCUPANCY CLASSIFICATION (CHAPTER 3):	STORAGE (S-2) AND BUSINESS (B):	302.1
SEPARATION:	BUILDING HAS BEEN DESIGNED AS A NON SEPARATED MIXED USE FACILITY AND WILL FOLLOW THE MOST RESTRICTIVE OF THE TWO OCCUPANCIES (B) IN ACCORDANCE WITH 508.3. NO SEPARATION REQD	TABLE 508.3

TABLE 509- INCIDENTAL USES: FURNACE ROOMS W/ EQUIP OVER 400,000 BTU PER HR 1 HR OR SPRINKLER SYSTEM REQD: SPRINKLER SYSTEM PROVIDED

GENERAL BUILDING HEIGHTS AND AREA

CONSTRUCTION CLASSIFICATION:	TYPE IIB	TABLE 601

ALLOWABLE HEIGHT AND AREA — TABLES 504.3 504.4

GROUP	MAX. ALLOWABLE HT. (FT) (IBC 504.3)	ACTUAL HT. (FT)	MAX. ALLOW. HT. (STORIES) (IBC 504.4)	ACTUAL HT.	MAX. ALLOW. AREA (SF PER FLOOR) (IBC 506.2)	MAX. ACTUAL (SF PER FLOOR)
S-2	75'	32'	4	1	104,000*	15,800
B	75'	32'	4	1	92,000*	3,513

*507.4-THE AREA OF A SPRINKLERED ONE STORY GROUP B/S BLDG SHALL NOT BE LIMITED WHERE THE BUILDING IS PROVIDED WITH AN AUTOMATIC SPRINKLER SYSTEM THROUGHOUT IN ACCORDANCE W/ 903.3.1.1.
MEZZANINE NOT CLASSIFIED AS A STORY IN ACCORDANCE WITH 505.2

FIRE RESISTANCE

	REQ'D HOURS	ACTUAL	CODE REFERENCE
PRIMARY STRUCTURAL FRAME	0	0	TABLE 601
BEARING WALLS - INTERIOR AND EXTERIOR	0	0	TABLE 601
NON-BEARING WALLS AND EXTERIOR PARTITIONS	0	0	TABLE 601
FLOOR CONSTRUCTION AND ASSOCIATED SECONDARY MEMBERS	0	0	TABLE 601
ROOF CONSTRUCTION AND ASSOCIATED SECONDARY MEMBERS	0	0	TABLE 601

BUILDING OCCUPANCY

TABLE 1004.1.2

LEVEL	OCCUPANCY USE GROUP	AREA (sq ft)	AREA PER OCCUPANT (sq ft/ OCC..) BC 1004.1.2	OCCUPANT LOAD
GROUND	LOW HAZARD STORAGE (VEHICLE STORAGE)	15,800	1/500 GROSS	32
	MECHANICAL ROOM	396	1/300 GROSS	2
	TOOL ROOM	376	1/300 GROSS	2
	BUSINESS			
	DATA	60	1/300 GROSS	1
	JANITOR	41	1/300 GROSS	1
	ELECTRIC	124	1/300 GROSS	1
	LUNCH	492	1/100 GROSS	5
	M. LOCKER	398	1/50 GROSS	8
	W. LOCKER	233	1/50 GROSS	5
	OFFICE (HMS-1)	309	1/100 GROSS	4
	OFFICE (HMS-2)	198	1/100 GROSS	2
MEZZANINE	MECHANICAL/ EQUIPMENT MEZZANINE	2,262	ACTUAL	2
			TOTAL	65

FIRE PROTECTION

CHAPTER 9-903.2.10.1

NFPA 13 SPRINKLER SYSTEM	REQUIRED	PROVIDED
903.2.10-COMMERCIAL PARKING GARAGES. AN AUTOMATIC SPRINKLER SYSTEM SHALL BE PROVIDED THROUGHOUT BUILDINGS USED FOR STORAGE OF COMMERCIAL MOTOR VEHICLES WHERE THE FIRE AREA EXCEEDS 5,000 SQUARE FEET		

PORTABLE FIRE EXTINGUISHERS

CHAPTER 9-906.1

906.1 - REQUIRED IN 'B' AND 'S' OCCUPANCIES	REQUIRED	PROVIDED

906.3 - SIZE AND DISTRIBUTION

LOCATION	HAZARD	EXTINGUISHER	TRAVEL DISTANCE (MAX)
LUNCH ROOM	LIGHT	K	30'
OFFICE	LIGHT	2-A	75'
VEHICLE STORAGE	ORDINARY	20-B	50'

PLUMBING FIXTURES

TABLE 403.1

OCCUPANCY	OCCUPANT LOAD	WATER CLOSETS RATIO	WATER CLOSETS MALE	WATER CLOSETS RATIO	WATER CLOSETS FEMALE	LAVATORY RATIO	LAVATORY MALE	LAVATORY RATIO	LAVATORY FEMALE	BATH/ SHOWER	DRINKING FOUNTAIN	SERVICE SINK
BUSINESS (B)	18	1/25	1	1/25	1	1/40	1	1/40	1	NOT REQD	1/100	1
STORAGE (S-2)	40	1/100	1	1/100	1	1/100	1	1/100	1	*	1/ 1000	1
TOTAL REQUIRED		2		2		2		2		-	1	1
TOTAL PROVIDED		4***		2		2		2		2	1 **	1

* EMERGENCY EYEWASH PROVIDED
** HI/ LOW FOUNTAIN PROVIDED
*** 2 WATER CLOSETS/ 2 URINALS

EGRESS

COMPONENT		OCCUPANCY B	OCCUPANCY S-2	CODE REFERENCE
EXIT ACCESS TRAVEL DISTANCE	ALLOWABLE	300'	400'	TABLE 1017.2
	ACTUAL	51'	185'	
COMMON PATH OF TRAVEL	ALLOWABLE	100'	100'	TABLE 1006.2.1
	ACTUAL	26'	34'	
DEAD END CORRIDOR - MAXIMUM	ALLOWABLE	50'	50'	1020.4
	ACTUAL	7'-0'	N/A	
CORRIDOR FIRE RESISTANCE RATING	ALLOWABLE	0 HR	0 HR	1020.1
	ACTUAL	0 HR	N/A	
MINIMUM CORRIDOR WIDTH	ALLOWABLE	44"	44"	TABLE 1020.2
	ACTUAL	60"	NONE	
MINIMUM NUMBER OF EXITS	ALLOWABLE	1	2	TABLE 1006.2.1
	ACTUAL	1	4	
MINIMUM EGRESS DOOR WIDTH	ALLOWABLE	32"	32"	1010.1.1
	ACTUAL	36"	36"	
EXIT CAPACITY* (CALCULATED AT 0.15/ OCCUPANT)	REQUIRED	PROVIDED		1005.3.2
GROUND FLOOR	8.7"	180		
STAIR WIDTH* (CALCULATED AT 0.20/ OCCUPANT)	INCH/STAIR	STAIRS		1005.3.1
MEZZANINE	1.6"	24"		

*EQUIPPED WITH AUTOMATIC SPRINKLER SYSTEM IN ACCORDANCE WITH 903.3

ENERGY CODE (COMCHECK)

			CODE REFERENCE
CLIMATE ZONE	DUTCHESS COUNTY - ZONE 5 A		-
COMPLIANCE PATH: COMCHECK REPORT	PASSES/ COMPLIES		
BUILDING ENVELOPE	PROVIDED		-
ROOFS			
METAL BUILDING	R-53.5		
ATTIC AND OTHER (OFFICE)	R-38.5		
WALLS (ABOVE GRADE)			
METAL BUILDING	R-41		
MASS (OFFICE WALLS)	R-14.5		
WALLS (BELOW GRADE)			
BELOW GRADE WALL	R-11.2		
SLAB EDGE ISOLATION AT FOUNDATION PERIMETER	R-5.6		
SLAB ON GRADE FLOORS			
HEATED SLABS	R-11.2		
FENESTRATION			-
FIXED FENESTRATION	U-0.38	-	
OPERABLE FENESTRATION	U-0.45	-	
ENTRANCE DOORS	U-0.07	-	

INTERIOR FINISHES

PER TABLE 803.11

	OCCUPANCY B REQD	OCCUPANCY B PROVIDED	OCCUPANCY S-2 REQD	OCCUPANCY S-2 PROVIDED
EXIT ENCLOSURES AND EXIT PASSAGEWAYS	CLASS B	CLASS A	CLASS C	N/A
CORRIDORS	CLASS C	CLASS A	CLASS C	N/A
ROOMS AND ENCLOSED SPACE	CLASS C	CLASS A	CLASS C	CLASS A

ACCESSIBILITY

	REQUIRED	PROVIDED	CODE REFERENCE
ACCESSIBLE PARKING SPACES (26-50 SPACES)	2	2	1106.1
TOILET AND BATHING FACILITIES			
WATER CLOSETS (5% ACCESSIBLE)	5%	1 EA	1109.2.2
LAVATORIES (5% ACCESSIBLE)	5%	2 EA	1109.2.3
KITCHENS AND KITCHENETTES	REQUIRED	PROVIDED	1109.4
DRINKING FOUNTAINS	2	2	1109.5.1
ACCESSIBLE ENTRANCES			
PUBLIC ENTRANCES (AT LEAST 60%)	1	1	1105.1
RESTRICTED ENTRANCE	1	1	1105.1.3

TRUSS IDENTIFICATION SIGNS SHALL BE PROVIDED IN ACCORDANCE WITH TITLE 19 NYCRR PART 1264 AND SHALL BE LOCATED AT BUILDING ENTRANCE DOORS, EXTERIOR DISCHARGE DOORS AND FIRE DEPARTMENT HOSE CONNECTIONS.

A. ATTACH SIGN TO FACE OF DOOR, OR ATTACHED TO A SIDELIGHT OR FACE OF THE BUILDING NOT MORE THAN 12 INCHES HORIZONTALLY FROM THE LATCH SIDE OF THE DOOR JAMB, AND NOT LESS THAN 42 INCHES NOR MORE THAN 60 INCHES ABOVE THE ADJOINING WALKING SURFACES.

B. ATTACH SIGN AT EACH END OF A ROW OF DOORS AT A MAXIMUM HORIZONTAL DISTANCE OF 12 FEET BETWEEN SIGNS, AND NOT LESS THAN 42 INCHES NOR MORE THAN 60 INCHES ABOVE THE ADJOINING WALKING SURFACE.

C. AT FIRE DEPARTMENT HOSE CONNECTIONS ATTACH TO THE FACE OF BUILDING, NOT MORE THAN 12 INCHES HORIZONTALLY FROM THE CENTER LINE OF THE FIRE DEPARTMENT HOSE CONNECTION, AND NOT LESS THAN 42 INCHES NOR MORE THAN 60 INCHES ABOVE THE ADJOINING WALKING SURFACE.

D. SIGNS IDENTIFYING THE EXISTENCE OF TRUSS CONSTRUCTION SHALL CONSIST OF A CIRCLE 6 INCHES IN DIAMETER, WITH A STROKE WIDTH OF 1/2 INCH. THE SIGN BACKGROUND SHALL BE REFLECTIVE WHITE IN COLOR. THE CIRCLE AND CONTENTS SHALL BE REFLECTIVE RED IN COLOR, CONFORMING TO PANTONE MATCHING SYSTEM (PMS) # 187. WHERE A SIGN IS DIRECTLY APPLIED TO A DOOR OR SIDELIGHT, IT MAY BE A PERMANENT STICKER OR DECAL. SIGNS NOT DIRECTLY APPLIED TO DOORS OR SIDELIGHTS SHALL BE STURDY, NON-FADING, WEATHER RESISTANT MATERIAL.

E. SIGNS SHALL CONTAIN THE ROMAN ALPHANUMERIC DESIGNATION OF THE CONSTRUCTION TYPE OF THE BUILDING, IN ACCORDANCE WITH THE PROVISIONS FOR THE CLASSIFICATION OF TYPES SET FORTH IN SECTION 602 OF THE BUILDING CODE OF NEW YORK STATE 2010, AND AN ALPHABETIC DESIGNATION FOR THE STRUCTURAL COMPONENTS THAT ARE OF TRUSS CONSTRUCTION AS FOLLOWS:

"F" SHALL MEAN FLOOR FRAMING, INCLUDING GIRDERS AND BEAMS

"R" SHALL MEAN ROOF FRAMING

"FR" SHALL MEAN FLOOR AND ROOF FRAMING

F. THE CONSTRUCTION TYPE DESIGNATION SHALL BE PLACED AT TWELVE O'CLOCK POSITION OVER THE STRUCTURAL COMPONENT DESIGNATION, WHICH SHALL BE PLACED AT THE SIX O'CLOCK POSITION. REFER TO FOLLOWING SYMBOL FOR THIS BUILDING:

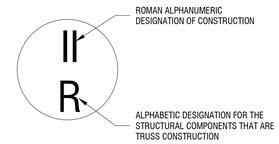

TRUSS IDENTIFICATION SIGNAGE

PUMP HOUSE

ENERGY CODE (COMCHECK)

		CODE REFERENCE
OCCUPANCY	U-UTILITY	-
CLIMATE ZONE	DUTCHESS COUNTY - ZONE 5 A	
COMPLIANCE PATH: COMCHECK REPORT	PASSES/ COMPLIES	
BUILDING ENVELOPE	PROVIDED	-
ROOF		
INSULATION AT DECK	R-30	
WALLS (ABOVE GRADE)		
CONCRETE	R-11.2	
WALLS (BELOW GRADE)		
CONCRETE	R-11.2	
FLOOR		
SLAB ON GRADE (UNHEATED)	R-11.2	
FENESTRATION		
ENTRANCE DOUBLE DOOR	U-0.16	

NEW YORK STATE OF OPPORTUNITY. Office of General Services

DESIGN & CONSTRUCTION

CONSULTANT:

LaBella Powered by partnership.

WARNING:
THE ALTERATION OF THIS MATERIAL IN ANY WAY, UNLESS DONE UNDER THE DIRECTION OF A COMPARABLE PROFESSIONAL, I.E. ARCHITECT FOR AN ARCHITECT, ENGINEER FOR AN ENGINEER OR LANDSCAPE ARCHITECT FOR A LANDSCAPE ARCHITECT, IS A VIOLATION OF THE NEW YORK STATE EDUCATION LAW AND/OR REGULATIONS AND IS A CLASS 'A' MISDEMEANOR.

REGISTERED ARCHITECT DAVID L. WELLS 037599 STATE OF NEW YORK

CONTRACT: ALL

TITLE: PROVIDE SUB-HEADQUARTERS BUILDING

LOCATION: DOT REGION 8, DUTCHESS COUNTY
205 LIME KILN RD.
EAST FISHKILL, NEW YORK

CLIENT: NEW YORK STATE DEPARTMENT OF TRANSPORTATION

MARK	DATE	DESCRIPTION
	10/17/2019	BID DOCUMENTS

PROJECT NUMBER: 45552-C,H,P & E

DESIGNED BY: DMD
DRAWN BY: DMD
FIELD CHECK:
APPROVED:

SHEET TITLE: CODE COMPLIANCE AND LIFE SAFETY

DRAWING NUMBER: G-004

2/28/2020 2:20:45 PM
C:\Users\Sheckett\Documents\Revit Local Files\2018 DOT Sub Headquarter Bldg_shackett.rvt
36x24 PLOT SHEET

GENERAL NOTES:

1. EXISTING INFORMATION AND CONDITIONS ARE NOT GUARANTEED CONTRACTOR MUST VERIFY EXISTING CONDITIONS. THE CORRECTNESS AND COMPLETENESS OF THE INFORMATION SHOWING EXISTING CONDITIONS IS NOT GUARANTEED. BEFORE BEGINNING CONSTRUCTION, PERFORM THE FOLLOWING TASKS:
   a. NOTIFY DIG SAFELY NY AND HAVE ANY PRIVATE UTILITIES WITHIN THE LIMITS OF CONSTRUCTION MARKED OUT AT LEAST 48 HOURS PRIOR TO START OF CONSTRUCTION. THE CONTRACTOR SHALL HIRE A UTILITY MARK-OUT FIRM TO MARK-OUT ALL UTILITIES ON THE DOT PROPERTY. MAINTAIN MARKINGS THROUGHOUT CONSTRUCTION;
   b. COORDINATE AND REVIEW ANY INFORMATION THAT COULD LEAD TO THE DISCOVERY OF UTILITIES NOT LOCATED BY SURVEY WITH THE DIRECTORS REPRESENTATIVE;
   c. VERIFY THE GENERAL ACCURACY OF THE EXISTING CONDITIONS SHOWN ON THE SITE DRAWINGS BY VISUAL INSPECTION OF THE SURFACE OF THE SITE AND ALL EXISTING STRUCTURES, PAVING, AND UTILITY APPURTENANCES VISIBLE THEREON.
   d. VERIFY THE EXISTENCE, SIZE, LOCATION AND ELEVATION OF EXISTING UTILITIES INCLUDING BUT NOT LIMITED TO: STORM DRAINS, SANITARY LINES, WATER LINES, GAS LINES, ELECTRIC LINES, TELEPHONE LINES, AND COMMUNICATION LINES, AND ALL MANHOLES, INLETS, CLEAN-OUTS, VALVES, HANDHOLES, ETC. WITHIN THE LIMIT OF CONTRACT, IN ORDER TO, (1) AVOID DAMAGING OR DISRUPTING SERVICE, AND (2) TO COORDINATE AND FACILITATE CONSTRUCTION OF PROPOSED UTILITIES AND OTHER IMPROVEMENTS. UNDERGROUND FACILITIES SHALL BE VERIFIED AS TO LOCATION AND DEPTH PRIOR TO EXCAVATING. EXISTING UTILITY INVERTS SHALL BE FIELD VERIFIED PRIOR TO ORDERING STRUCTURES.
   e. IMMEDIATELY REPORT TO THE DIRECTORS REPRESENTATIVE THE RESULTS OF STEPS (A), (B), (C) AND (D) WHICH MIGHT INDICATE ANY DISCREPANCY BETWEEN ACTUAL CONDITIONS AND THOSE SHOWN ON THE PLAN, AND POTENTIAL CONFLICTS BETWEEN PROPOSED IMPROVEMENTS AND EXISTING CONDITIONS.
2. VERIFY ALL EXISTING CONDITIONS IN THE FIELD AND REPORT ANY DISCREPANCIES BETWEEN PLANS AND ACTUAL CONDITIONS TO THE DIRECTORS REPRESENTATIVE PRIOR TO STARTING WORK.
3. IN THE EVENT THAT THE CONTRACTOR OR CONTRACTOR'S SUBCONTRACTORS DAMAGES ANY EXISTING SITE FEATURE (IE, CURB, PAVEMENT, UTILITY, TREE, LAWN, ETC.) NOT INDICATED TO BE REMOVED, INSIDE OR OUTSIDE LIMIT OF CONTRACT, OR ANY NEWLY INSTALLED IMPROVEMENT, REPAIR AND REPLACE SAID DAMAGE TO THE DIRECTOR'S REPRESENTATIVE'S SATISFACTION, AT NO ADDITIONAL COST TO THE STATE.
4. UNLESS NOTED OTHERWISE, PROVIDE MATERIALS AND LABOR FOR CONSTRUCTION, SURVEY, AND STAKE OUT OF PROPOSED IMPROVEMENTS. UNLESS OTHERWISE NOTED, ITEMS TO BE REMOVED THAT ARE NOT STOCKPILED FOR LATER REUSE ON THE PROJECT OR TURNED OVER TO THE FACILITY AND ALL EXCESS EXCAVATED MATERIAL SHALL BECOME THE PROPERTY OF THE CONTRACTOR AND SHALL BE DISPOSED OF OFF SITE IN A LAWFUL MANNER.
5. ROADS AND PARKING LOTS SHALL BE KEPT CLEAN OF MUD, DUST, AND DEBRIS AT ALL TIMES.
6. SITE SURVEY SHOWN IN THE PLANS WAS CONDUCTED BY SHUMAKER CONSULTING ENGINEERING AND LAND SURVEYING, D.P.C., 143 COURT ST. BINGHAMTON, NY 13901, (607)798-8081 DATED: OCTOBER 2018.
7. COORDINATE THE LOCATION FOR CONTRACTORS STAGING AREA (TRAILER, STORAGE, OR STOCKPILE AREAS) WITH THE DIRECTORS REPRESENTATIVE AND THE FACILITY. ALL AREAS USED FOR STAGING AND STOCKPILES SHALL BE ENCIRCLED WITH SILT FENCE AND SHALL BE RESTORED TO EXISTING CONDITIONS AT THE CONCLUSION OF CONSTRUCTION. STAGING AND STOCKPILE AREAS SHALL NOT ENCROACH ON NYSDOT OPERATIONAL AREAS.
8. UNLESS NOTED OTHERWISE ON DRAWINGS, REMOVAL OF EXISTING CONDITIONS INCLUDES COMPLETE REMOVAL AND LEGAL DISPOSAL OF ENTIRE FEATURE OR STRUCTURE INCLUDING FOOTINGS.
9. USE COORDINATE SYSTEM AND BASELINE TO LAYOUT PROPOSED WORK IN THE FIELD. ALL FEATURES SHALL BE STAKED OUT BY A LICENSED LAND SURVEYOR.
10. BECOME FAMILIAR WITH ALL CONSTRUCTION DOCUMENTS, SPECIFICATIONS, AND SITE CONDITIONS PRIOR TO BIDDING AND PRIOR TO CONSTRUCTION.
11. ANY DISCREPANCIES BETWEEN DRAWINGS, SPECIFICATIONS, AND SITE CONDITIONS SHALL BE REPORTED IMMEDIATELY TO THE DIRECTORS REPRESENTATIVE FOR CLARIFICATION AND RESOLUTION PRIOR TO BIDDING OR CONSTRUCTION.
12. COORDINATE EFFORTS WITH ALL TRADES.
13. NYSDOT OPERATION AT THE SITE SHALL NOT BE IMPACTED BY THE CONTRACTORS OPERATIONS. ACCESS TO ALL BUILDINGS AND NON WORK AREAS SHALL BE MAINTAINED AT ALL TIMES. CONTRACTORS OPERATIONS SHALL BE COORDINATED WITH THE SITE TO ENSURE THAT NYSDOT OPERATIONS ARE NOT DISRUPTED.

EROSION AND SEDIMENT CONTROL NOTES:

1. PERFORM ALL CONSTRUCTION OPERATIONS IN A MANNER SO AS TO MINIMIZE SOIL EROSION AND ENSURE SEDIMENT CONTROL. EROSION CONTROL MEASURES ARE ITEMS WHICH MINIMIZE THE EROSION OF SOIL. SEDIMENT CONTROL MEASURES ARE ITEMS WHICH KEEP SEDIMENT FROM LEAVING THE PROJECT SITE. EFFECTIVE SOIL EROSION AND SEDIMENT CONTROL HAVING TEMPORARY OR PERMANENT SOIL EROSION AND SEDIMENT CONTROL MEASURES IN PLACE. PERIMETER SEDIMENT CONTROL MEASURES ALONE ARE NOT CONSIDERED ADEQUATE PROTECTION.
2. ALL NECESSARY PRECAUTIONS SHALL BE TAKEN TO PREVENT DIRECT OR INDIRECT CONTAMINATION OF ALL WATER BODIES (INCLUDING WETLANDS) BY SILT, SEDIMENT, FUELS, SOLVENTS, LUBRICANTS,EPOXY COATINGS, CONCRETE LEACHATE, OR ANY OTHER POLLUTANT ASSOCIATED WITH CONSTRUCTION AND CONSTRUCTION PROCEDURES. DURING CONSTRUCTION, NO WET OR FRESH CONCRETE OR LEACHATE SHALL BE ALLOWED TO ESCAPE DIRECTLY OR INDIRECTLY ON TO THE GROUND OR ANY WATER BODIES (INCLUDING WETLANDS), NOR SHALL WASHINGS FROM CONCRETE TRUCKS, MIXERS, OR OTHER DEVICES BE ALLOWED TO ESCAPE DIRECTLY OR INDIRECTLY INTO ANY WATER BODIES (INCLUDING WETLANDS).
3. TEMPORARY SOIL AND EROSION AND SEDIMENT CONTROL MEASURES SHALL BE MAINTAINED AS PER DETAILS AND NEW YORK STATE DEPARTMENT OF ENVIRONMENTAL CONSERVATION (NYSDEC) REQUIREMENTS STATED IN THE NEW YORK STATE STANDARDS AND SPECIFICATIONS FOR EROSION AND SEDIMENT CONTROL. THE COST OF MAINTAINING AND REMOVING TEMPORARY SOIL EROSION AND SEDIMENT CONTROL MEASURES SHALL BE INCLUDED IN THE BID PRICE. ALL TEMPORARY SOIL EROSION AND SEDIMENT CONTROL MEASURES SHALL BE INSPECTED BY THE CONTRACTOR AFTER EACH STORM EVENT OF 1" OR MORE IN A 12 HOUR PERIOD. AT LEAST DAILY DURING PROLONGED RAINFALL. IF NO RAINFALL OCCURS, INSPECTION SHALL BE PERFORMED ONCE EVERY SEVEN CALENDAR DAYS.
4. PERIMETER SEDIMENT CONTROL MEASURES AND VEGETATION PROTECTION FENCES SHALL BE PLACED PRIOR TO STARTING CLEARING AND GRUBBING OR OTHER CONSTRUCTION OPERATIONS. THESE MEASURES SHALL REMAIN IN PLACE UNTIL ALL DISTURBED AREAS ARE PERMANENTLY PROTECTED WITH FINAL STABILIZATION MEASURES.
5. DURING CONSTRUCTION, NO WET OR FRESH CONCRETE OR LEACHATE SHALL BE ALLOWED TO ESCAPE INTO THE WATERS OF NEW YORK STATE, NOR SHALL WASHINGS FROM CONCRETE TRUCKS, MIXERS, OR OTHER DEVICES BE ALLOWED TO ENTER ANY WETLANDS OR WATERS. DO NOT WASH CONCRETE TRUCKS OUT ONTO THE BARE GROUND OR DIRECTLY TO THE STORM OR SANITARY SEWER. WASH WATER SHALL BE COLLECTED IN A WASHOUT BASIN(SEE DETAIL C-503/102).
6. ANY DEBRIS OR EXCESS MATERIALS FROM CONSTRUCTION OF THIS PROJECT SHALL BE IMMEDIATELY AND COMPLETELY REMOVED FROM GROUND AND DISPOSED OF PROPERLY.
7. IF DEWATERING OF THE SITE IS NECESSARY, PUT ALL DISCHARGE THROUGH A SETTLING TANK OR SIMILAR DEVICE BEFORE BEING DISCHARGED ONTO THE GROUND OR INTO THE STORM SEWER. DO NOT DISCHARGE TURBID WATER TO THE GROUND, STORM OR ANY WATER BODY. WATER SHALL BE DISCHARGED IN A MANNER THAT WILL NOT CAUSE EROSION.
8. ENCIRCLE STOCKPILES WITH SILT FENCE AND COVER THEM WITH A TARP OR OTHER FORM OF EROSION CONTROL MEASURE WITHIN 7 DAYS OF FORMATION.
9. EROSION CONTROL PRACTICES SHOWN ARE A MINIMUM, AND ADDITIONAL PRACTICES MAY BE NECESSARY. CONTRACTOR SHALL PROVIDE ALL ADDITIONAL PRACTICES REQUIRED TO MAINTAIN PROPER PROTECTION OF THE SITE.
10. TEMPORARY SEED AND MULCH ANY DISTURBED AREA THAT WILL NOT BE WORKED ON IN 7 DAYS. COST OF TEMPORARY SEEDING AND MULCHING SHALL BE INCLUDED IN THE BID PRICE.
11. ESTABLISH A CONSTRUCTION ENTRANCE (REFER TO DETAIL C-503/103) AT EACH ENTRANCE/EXIT TO THE SITE.
12. ABIDE BY THE PROJECT'S SWPPP.

EAST FISHKILL DRIVEWAY CENTERLINE ALIGNMENT

POINT TYPE		STATION/ DISTANCE		DIRECTION	NORTHING	EASTING
BP		0+00.00				
		24.419		N79°25'47.17"W		
PC		0+24.42				
	RADIUS:	252.768	DELTA:	42°12'52.84"	RIGHT	
	LENGTH:	186.236	DOC(ARC):	22°40'02.28"		
	CHORD:	182.052	DIRECTION:	N58°19'20.75"W		
	TANGENT:	97.572	DIRECTION:			
PT		2+10.65				
		70.498		N37°12'54.33"W		
PC		2+81.15			LEFT	
	RADIUS:	596.758	DELTA:	09°04'54.55"		
	LENGTH:	94.591	DOC(ARC):	09°36'04.32"		
	CHORD:	94.492	DIRECTION:	N41°45'21.60"W		
	TANGENT:	47.395	DIRECTION:			
PT		3+75.74				
		43.914		N46°17'48.88"W		
PC		4+19.66			LEFT	
	RADIUS:	227.087	DELTA:	23°04'25.46"		
	LENGTH:	91.451	DOC(ARC):	23°13'50.52"		
	CHORD:	90.834	DIRECTION:	N57°50'01.61"W		
	TANGENT:	46.354	DIRECTION:			
EP		5+11.11				

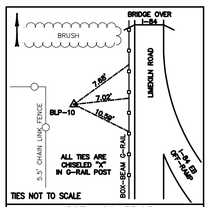

BSTA. 26+33.63
10" DOCK SPIKE SET IN GRASS ±8' WEST OF LIMEKILN ROAD AND ±480' NORTH OF THE ENTRANCE TO THE EAST FISHKILL NYSDOT YARD.

NYSPCS NAD 83 EAST ZONE
N: 982837.65 E: 680370.57

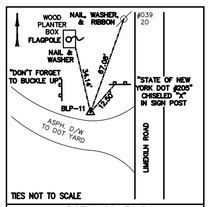

BSTA. 20+54.24
10" DOCK SPIKE SET IN GRASS ±25' WEST OF LIMEKILN ROAD AND ±3.5' NORTH OF THE ASPHALT DRIVEWAY TO THE EAST FISHKILL NYSDOT YARD.

NYSPCS NAD 83 EAST ZONE
N: 982274.69 E: 680233.59

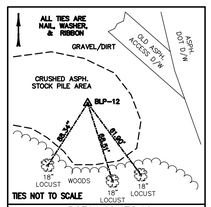

BSTA. 16+78.16
10" DOCK SPIKE SET IN REMNANTS OF A CRUSHED ASPH. STOCKPILE AREA ±100' WEST OF ASPH. D/W FOR THE DOT YARD AND ±190' SOUTH OF S/W CORNER OF WESTERN MOST BUILDING AT THE YARD.

NYSPCS NAD 83 EAST ZONE
N: 982481.32 E: 679919.36

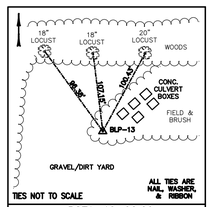

BSTA. 10+00.00
10" DOCK SPIKE SET IN GRAVEL ±100' SOUTH OF THE WOODLINE ALONG I-84 AND ±700' WEST OF THE SOUTHWEST CORNER OF THE WESTERN MOST CORNER OF THE NYSDOT YARD.

NYSPCS NAD 83 EAST ZONE
N: 982694.21 E: 679275.49

VERTICAL DATUM: NAVD88

BM	STA./OFF.	DESCRIPTION	ELEV.
1	25+20.5/ 8.8' LT.	RAILROAD SPIKE IN IN UTILITY POLE #039/18 LOCATED ±15' WEST OF LIMEKILN ROAD PAVEMENT EDGE AND ±475' NORTH OF THE ENTRANCE TO THE NYSDOT YARD.	304.84'
2	21+19.4/ 18.6' RT.	RAILROAD SPIKE IN UTILITY POLE #039/20 LOCATED ±3' WEST OF LIMEKILN ROAD PAVEMENT EDGE AND ±60' NORTH OF THE ENTRANCE TO THE NYSDOT YARD.	287.04'
3	17+15.4/ 49.7' RT.	RAILROAD SPIKE IN AN 18" LOCUST TREE LOCATED ±95' WEST OF THE ASPHALT DRIVEOF THE NYSDOT YARD AND ±251' SOUTH OF THE SOUTHWEST CORNER OF THE WESTERN MOST BUILDING IN THE YARD.	315.48'

NEW YORK STATE OF OPPORTUNITY. Office of General Services

DESIGN & CONSTRUCTION

CONSULTANT:

SHUMAKER Consulting Engineering & Land Surveying, D.P.C.

WARNING:

THE ALTERATION OF THIS MATERIAL IN ANY WAY, UNLESS DONE UNDER THE DIRECTION OF A COMPARABLE PROFESSIONAL, I.E. ARCHITECT FOR AN ARCHITECT, ENGINEER FOR AN ENGINEER OR LANDSCAPE ARCHITECT FOR A LANDSCAPE ARCHITECT, IS A VIOLATION OF THE NEW YORK STATE EDUCATION LAW AND/OR REGULATIONS AND IS A CLASS 'A' MISDEMEANOR.

STATE OF NEW YORK · JAMES M. CUMMINGS · 080958 · LICENSED PROFESSIONAL ENGINEER

CONTRACT:
CONSTRUCTION

TITLE:
PROVIDE SUB-HEADQUARTERS BUILDING

LOCATION:
DOT REGION 8, DUTCHESS COUNTY
205 LIME KILN RD.
EAST FISHKILL,NEW YORK 12533

CLIENT:
NEW YORK STATE DEPARTMENT OF TRANSPORTATION

MARK	DATE	DESCRIPTION
	10/17/2019	BID DOCUMENTS

PROJECT NUMBER:	45552-C
DESIGNED BY:	EFN
DRAWN BY:	AWR
FIELD CHECK:	
APPROVED:	JMC

SHEET TITLE:
CIVIL NOTES AND BASELINE TIES AND BENCHMARKS

DRAWING NUMBER:
CG-100

Mar 16,2020 - 1:04pm
E:\2017\17095-East Fishkill NYSDOT Site\Design\PLANS\17095_CG100_Civil_Notes_and_Baseline_Ties_and_Benchmarks.dwg

36x24 PLOT SHEET

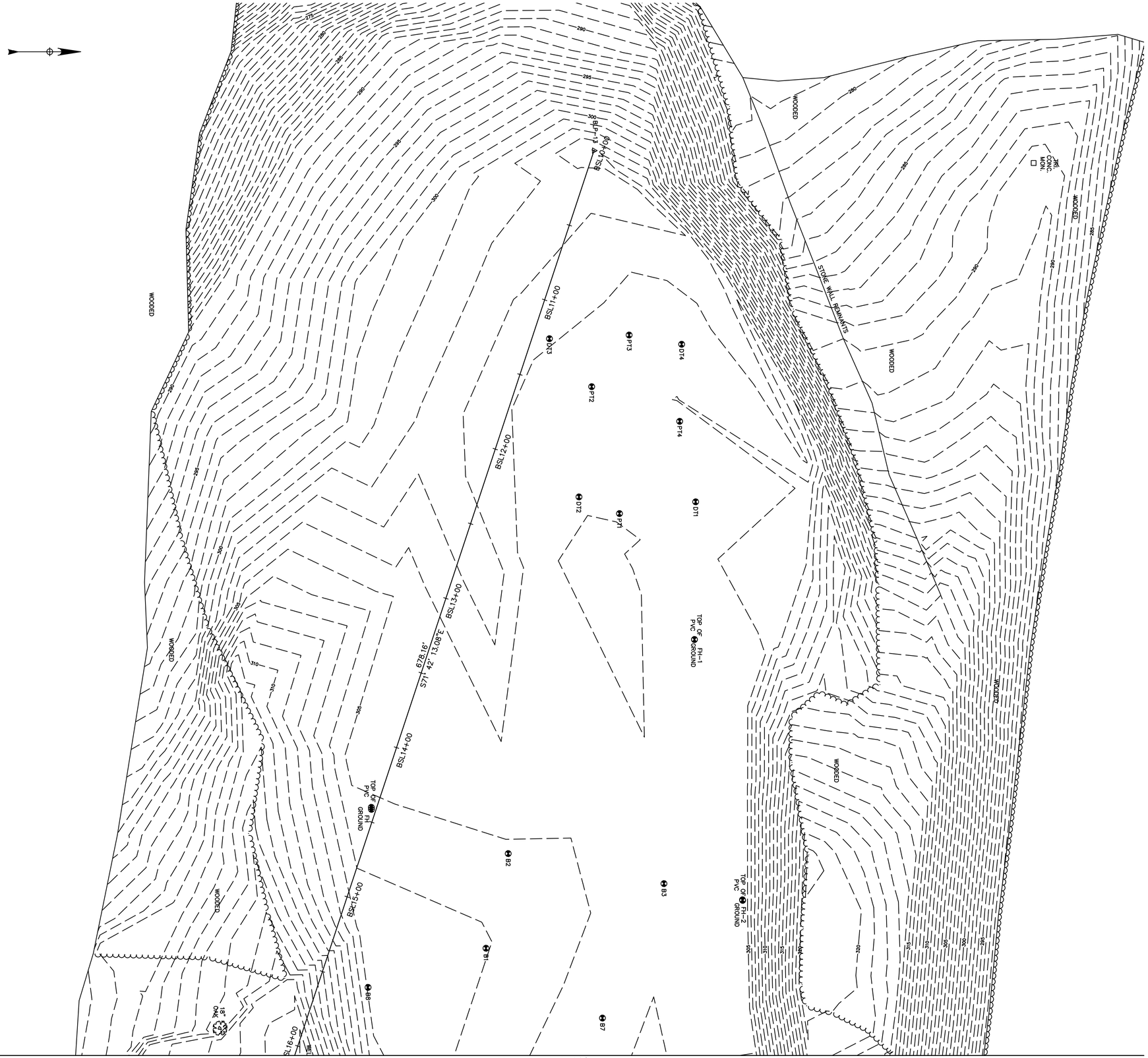

LEGEND

EXISTING

- MULTI-POST SIGN
- SIGN
- DELINEATOR
- DECIDUOUS TREE
- CONIFEROUS TREE
- CONIFEROUS SHRUB
- UNKNOWN VENT
- LANDSCAPE ROCK
- POST
- FLAGPOLE
- ELECTRIC METER
- WATER VALVE
- FIRE HYDRANT
- WATER MANHOLE
- GAS MANHOLE
- GAS METER
- SANITARY MANHOLE
- STORM MANHOLE
- SQUARE CATCH BASIN
- DRAINAGE INVERT
- LIGHT POLE
- UTILITY POLE
- BASELINE POINT
- BENCHMARK
- BORING/TEST PIT LOCATION
- PROPERTY MONUMENT
- ---- 945 ---- MAJOR CONTOUR
- MINOR CONTOUR
- —— ST —— STORM SEWER
- —— SS —— SANITARY SEWER
- —— W —— WATER LINE
- —— E —— E —— ELECTRIC LINE
- —— G —— GAS LINE
- —— OHE —— OH ELECTRIC
- OH TELECOM
- EDGE OF WOODS

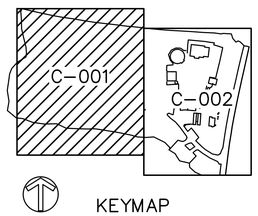

KEYMAP

36x24 PLOT SHEET

Mar 16,2020 – 1:05pm
E:\2017\17095-East Fishkill NYSDOT Site\Design\PLANS\17095_C001-C002_Existing_Conditions.dwg

NEW YORK STATE OF OPPORTUNITY. | Office of General Services

DESIGN & CONSTRUCTION

CONSULTANT:

SHUMAKER
Consulting Engineering & Land Surveying, D.P.C.

WARNING:

THE ALTERATION OF THIS MATERIAL IN ANY WAY, UNLESS DONE UNDER THE DIRECTION OF A COMPARABLE PROFESSIONAL, I.E. ARCHITECT FOR AN ARCHITECT, ENGINEER FOR AN ENGINEER OR LANDSCAPE ARCHITECT FOR A LANDSCAPE ARCHITECT, IS A VIOLATION OF THE NEW YORK STATE EDUCATION LAW AND/OR REGULATIONS AND IS A CLASS 'A' MISDEMEANOR.

STATE OF NEW YORK · JAMES M. CUMMINGS · 080958 · LICENSED PROFESSIONAL ENGINEER

CONTRACT:
CONSTRUCTION

TITLE:
PROVIDE SUB-HEADQUARTERS BUILDING

LOCATION:
DOT REGION 8, DUTCHESS COUNTY
205 LIME KILN RD.
EAST FISHKILL,NEW YORK 12533

CLIENT:
NEW YORK STATE DEPARTMENT OF TRANSPORTATION

MARK	DATE	DESCRIPTION
	10/17/2019	BID DOCUMENTS

PROJECT NUMBER:	45552-C
DESIGNED BY:	EFN
DRAWN BY:	AWR
FIELD CHECK:	
APPROVED:	JMC

SHEET TITLE:
EXISTING CONDITIONS

DRAWING NUMBER:
C-001

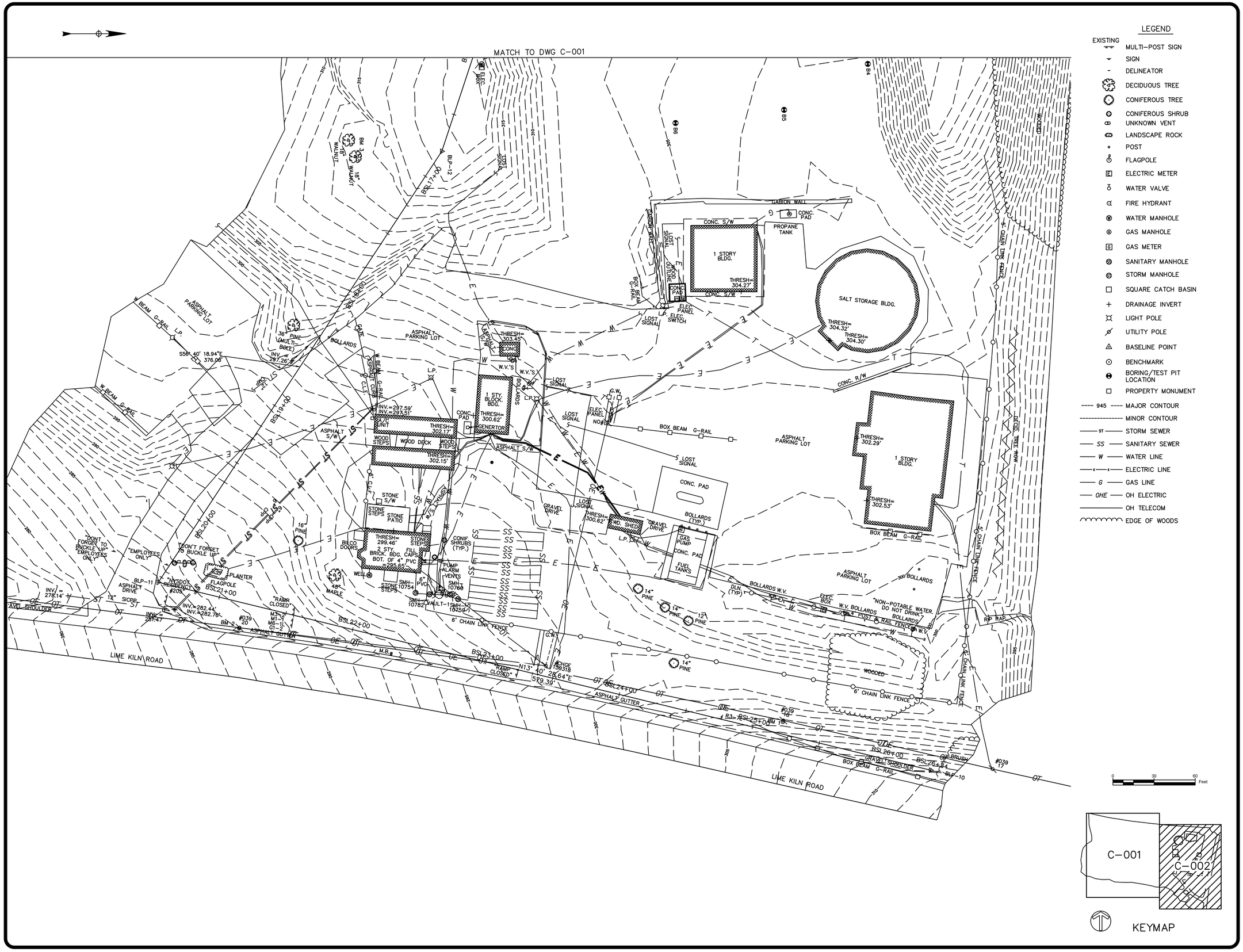

36x24 PLOT SHEET

Mar 16,2020 – 1:05pm
E:\2017\17095-East Fishkill NYSDOT Site\Design\PLANS\17095_C001-C002_Existing_Conditions.dwg

NEW YORK STATE OF OPPORTUNITY. Office of General Services

DESIGN & CONSTRUCTION

CONSULTANT:

SHUMAKER
Consulting Engineering & Land Surveying, D.P.C.

WARNING:

THE ALTERATION OF THIS MATERIAL IN ANY WAY, UNLESS DONE UNDER THE DIRECTION OF A COMPARABLE PROFESSIONAL, I.E. ARCHITECT FOR AN ARCHITECT, ENGINEER FOR AN ENGINEER OR LANDSCAPE ARCHITECT FOR A LANDSCAPE ARCHITECT, IS A VIOLATION OF THE NEW YORK STATE EDUCATION LAW AND/OR REGULATIONS AND IS A CLASS 'A' MISDEMEANOR.

STATE OF NEW YORK
JAMES M. CUMMINGS
080958
LICENSED PROFESSIONAL ENGINEER

CONTRACT:
CONSTRUCTION

TITLE:
PROVIDE SUB-HEADQUARTERS BUILDING

LOCATION:
DOT REGION 8, DUTCHESS COUNTY
205 LIME KILN RD.
EAST FISHKILL,NEW YORK 12533

CLIENT:
NEW YORK STATE DEPARTMENT OF TRANSPORTATION

MARK	DATE	DESCRIPTION
	10/17/2019	BID DOCUMENTS

PROJECT NUMBER:	45552-C
DESIGNED BY:	EFN
DRAWN BY:	AWR
FIELD CHECK:	
APPROVED:	JMC

SHEET TITLE:
EXISTING CONDITIONS

DRAWING NUMBER:
C-002

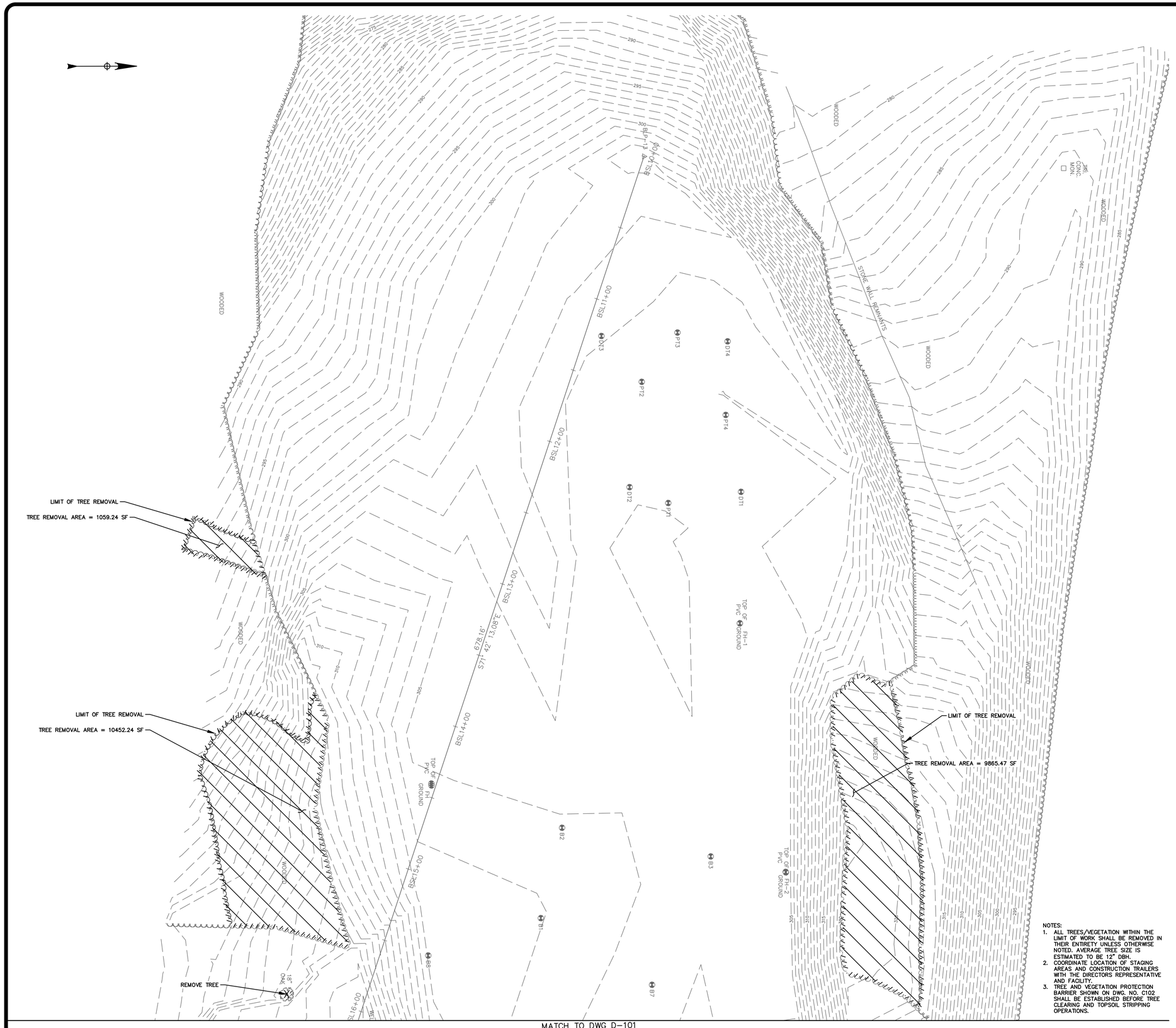

LEGEND

EXISTING		PROPOSED
	MULTI-POST SIGN	
	SIGN	
	DELINEATOR	
	DECIDUOUS TREE	
	CONIFEROUS TREE	
	CONIFEROUS SHRUB	
	UNKNOWN VENT	
	LANDSCAPE ROCK	
	POST	
	FLAGPOLE	
	ELECTRIC METER	
	WATER VALVE	
	FIRE HYDRANT	
	WATER MANHOLE	
	GAS MANHOLE	
	GAS METER	
	SANITARY MANHOLE	
	STORM MANHOLE	
	SQUARE CATCH BASIN	
	DRAINAGE INVERT	
	LIGHT POLE	
	UTILITY POLE	
	BASELINE POINT	
	BENCHMARK	
	BORING/TEST PIT LOCATION	
	PROPERTY MONUMENT	
945	MAJOR CONTOUR	945
	MINOR CONTOUR	
ST	STORM SEWER	ST
	ROOF LEADER(RL)	RL
SS	SANITARY SEWER	SS
W	WATER LINE	W
E	ELECTRIC LINE	E
G	GAS LINE	GAS
OHE	OH ELECTRIC	
	OH TELECOM	
	PLASTIC BARRIER FENCE	
	SILT FENCE	
	LIMIT OF GRADING	LOG
	FENCE	X
	REMOVALS	X
	EDGE OF WOODS	
	CONSTRUCTION ENTRANCE	
	ROLLED EROSION CONTROL MAT	
	PROPOSED PAVEMENT	
	TREE REMOVAL	
	PAVEMENT REMOVAL	
	LAWN RESTORATION	
	BIORETENTION AREA	
	PRETREATMENT AREA	
	SPILLWAY/STONE APRON	
	CRUSHED STONE	
	TOP OF CURB	T.C.
	BOTTOM OF CURB	B.C.

0 30 60 Feet

NOTES:
1. ALL TREES/VEGETATION WITHIN THE LIMIT OF WORK SHALL BE REMOVED IN THEIR ENTIRETY UNLESS OTHERWISE NOTED. AVERAGE TREE SIZE IS ESTIMATED TO BE 12" DBH.
2. COORDINATE LOCATION OF STAGING AREAS AND CONSTRUCTION TRAILERS WITH THE DIRECTORS REPRESENTATIVE AND FACILITY.
3. TREE AND VEGETATION PROTECTION BARRIER SHOWN ON DWG. NO. C102 SHALL BE ESTABLISHED BEFORE TREE CLEARING AND TOPSOIL STRIPPING OPERATIONS.

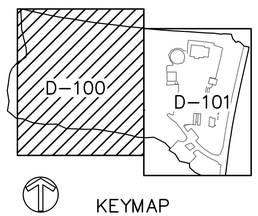

KEYMAP

36x24 PLOT SHEET

Mar 16,2020 – 1:06pm
E:\2017\17095-East Fishkill NYSDOT Site\Design\PLANS\17095_D100-D101_Removal_Plans.dwg

NEW YORK STATE OF OPPORTUNITY. Office of General Services

DESIGN & CONSTRUCTION

CONSULTANT:

SHUMAKER Consulting Engineering & Land Surveying, D.P.C.

WARNING:

THE ALTERATION OF THIS MATERIAL IN ANY WAY, UNLESS DONE UNDER THE DIRECTION OF A COMPARABLE PROFESSIONAL, I.E. ARCHITECT FOR AN ARCHITECT, ENGINEER FOR AN ENGINEER OR LANDSCAPE ARCHITECT FOR A LANDSCAPE ARCHITECT, IS A VIOLATION OF THE NEW YORK STATE EDUCATION LAW AND/OR REGULATIONS AND IS A CLASS 'A' MISDEMEANOR.

STATE OF NEW YORK · JAMES M. CUMMINGS · 080958 · LICENSED PROFESSIONAL ENGINEER

CONTRACT:

CONSTRUCTION

TITLE:

PROVIDE SUB-HEADQUARTERS BUILDING

LOCATION:

DOT REGION 8, DUTCHESS COUNTY
205 LIME KILN RD.
EAST FISHKILL,NEW YORK 12533

CLIENT:

NEW YORK STATE DEPARTMENT OF TRANSPORTATION

MARK	DATE	DESCRIPTION
	10/17/2019	BID DOCUMENTS

PROJECT NUMBER:	45552-C
DESIGNED BY:	EFN
DRAWN BY:	AWR
FIELD CHECK:	
APPROVED:	JMC

SHEET TITLE:

REMOVAL PLANS

DRAWING NUMBER:

D-100

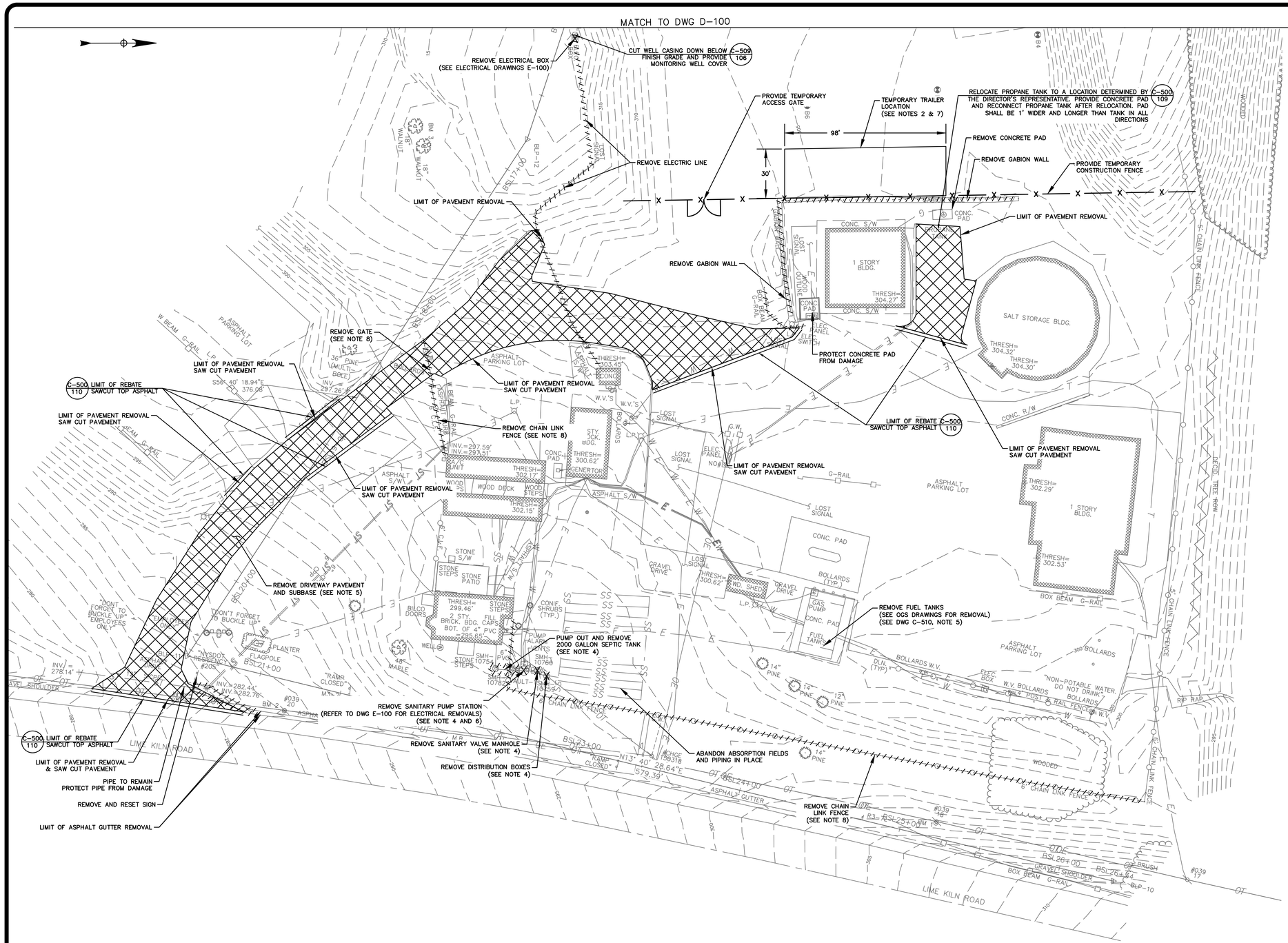

LEGEND

EXISTING		PROPOSED
	MULTI-POST SIGN	
	SIGN	
	DELINEATOR	
	DECIDUOUS TREE	
	CONIFEROUS TREE	
	CONIFEROUS SHRUB	
	UNKNOWN VENT	
	LANDSCAPE ROCK	
	POST	
	FLAGPOLE	
	ELECTRIC METER	
	WATER VALVE	
	FIRE HYDRANT	
	WATER MANHOLE	
	GAS MANHOLE	
	GAS METER	
	SANITARY MANHOLE	
	STORM MANHOLE	
	SQUARE CATCH BASIN	
	DRAINAGE INVERT	
	LIGHT POLE	
	UTILITY POLE	
	BASELINE POINT	
	BENCHMARK	
	BORING/TEST PIT LOCATION	
	PROPERTY MONUMENT	
945	MAJOR CONTOUR	945
	MINOR CONTOUR	
ST	STORM SEWER	ST
	ROOF LEADER(RL)	RL
SS	SANITARY SEWER	SS
W	WATER LINE	W
	ELECTRIC LINE	E
G	GAS LINE	GAS
OHE	OH ELECTRIC	
	OH TELECOM	
	PLASTIC BARRIER FENCE	
	SILT FENCE	
	LIMIT OF GRADING	LOG
	FENCE	X
	REMOVALS	X
	EDGE OF WOODS	
	CONSTRUCTION ENTRANCE	
	ROLLED EROSION CONTROL MAT	
	PROPOSED PAVEMENT	
	TREE REMOVAL	
	PAVEMENT REMOVAL	
	LAWN RESTORATION	
	BIORETENTION AREA	
	PRETREATMENT AREA	
	SPILLWAY/STONE APRON	
	CRUSHED STONE	
	TOP OF CURB	T.C.
	BOTTOM OF CURB	B.C.

NOTES:

1. ALL TREES/VEGETATION WITHIN THE LIMIT OF WORK SHALL BE REMOVED IN THEIR ENTIRETY UNLESS OTHERWISE NOTED. AVERAGE TREE SIZE IS ESTIMATED TO BE 12" DBH.
2. COORDINATE SIZE AND LOCATION OF STAGING AREAS AND CONSTRUCTION TRAILERS WITH THE DIRECTORS REPRESENTATIVE AND FACILITY.
3. TREE AND VEGETATION PROTECTION BARRIER SHOWN ON DWG. NO. C102 SHALL BE ESTABLISHED BEFORE TREE CLEARING AND TOPSOIL STRIPPING OPERATIONS.
4. REMOVALS SHALL NOT TAKE PLACE UNTIL AFTER BUILDING AND NEW SANITARY SYSTEM ARE IN PLACE, OPERATIONAL, AND PERMITTED. COORDINATE WITH DIRECTORS REPRESENTATIVE TO SHUT OFF WATER TO HOUSE AND TRAILERS DURING REMOVALS. BACKFILL REMOVED AREAS WITH COMPACTED 12" LIFTS OF SUITABLE MATERIAL. SEE ESTABLISH LAWN DETAIL C-500/104.
5. STAGE REMOVAL AND REPLACEMENT OF DRIVEWAY SO AS TO MAINTAIN ACCESS TO ENTIRE SITE AT ALL TIMES. COORDINATE WORK WITH SITE.
6. NYSDOT OPERATIONS AT THE SITE SHALL NOT BE IMPACTED BY THE CONTRACTORS OPERATIONS. ACCESS TO ALL BUILDINGS AND NON WORK AREAS SHALL BE MAINTAINED AT ALL TIMES. CONTRACTORS OPERATIONS SHALL BE COORDINATED WITH THE SITE TO ENSURE NYSDOT OPERATIONS ARE NOT DISRUPTED.
7. TRAILERS SHALL BE SET ON A MINIMUM OF 12" OF TYPE 2 SUBBASE.
8. GATE AND FENCE SHALL NOT BE REMOVED UNTIL NEW FENCE HAS BEEN INSTALLED.

0 30 60 Feet

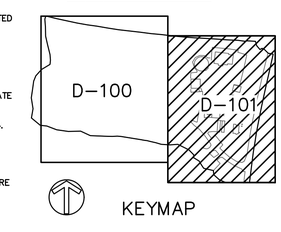

KEYMAP

NEW YORK STATE OF OPPORTUNITY. Office of General Services

DESIGN & CONSTRUCTION

CONSULTANT:

SHUMAKER Consulting Engineering & Land Surveying, D.P.C.

WARNING:

THE ALTERATION OF THIS MATERIAL IN ANY WAY, UNLESS DONE UNDER THE DIRECTION OF A COMPARABLE PROFESSIONAL, I.E. ARCHITECT FOR AN ARCHITECT, ENGINEER FOR AN ENGINEER OR LANDSCAPE ARCHITECT FOR A LANDSCAPE ARCHITECT, IS A VIOLATION OF THE NEW YORK STATE EDUCATION LAW AND/OR REGULATIONS AND IS A CLASS 'A' MISDEMEANOR.

STATE OF NEW YORK · JAMES M. CUMMINGS · 080958 · LICENSED PROFESSIONAL ENGINEER

CONTRACT:

CONSTRUCTION

TITLE:

PROVIDE SUB-HEADQUARTERS BUILDING

LOCATION:

DOT REGION 8, DUTCHESS COUNTY
205 LIME KILN RD.
EAST FISHKILL,NEW YORK 12533

CLIENT:

NEW YORK STATE DEPARTMENT OF TRANSPORTATION

MARK	DATE	DESCRIPTION
	10/17/2019	BID DOCUMENTS

PROJECT NUMBER:	45552-C
DESIGNED BY:	EFN
DRAWN BY:	AWR
FIELD CHECK:	
APPROVED:	JMC

SHEET TITLE:

REMOVAL PLANS

DRAWING NUMBER:

D-101

36x24 PLOT SHEET

Mar 16,2020 – 1:06pm
E:\2017\17095-East Fishkill NYSDOT Site\Design\PLANS\17095_D100-D101_Removal_Plans.dwg

NOTES:
1. ROLLED EROSION CONTROL PRODUCT SHALL BE USED ON ALL SLOPES, 1 ON 3 OR GREATER, OR WHERE SHOWN ON THE PLANS, OR WHERE ORDERED BY THE ENGINEER.
2. BIORETENTION AREAS SHALL HAVE UNDERDRAIN, STONE AND BIORETENTION SOIL INSTALLED ONCE CONTRIBUTING AREA HAS BEEN FINAL GRADED, SEEDED AND MULCHED OR PAVED. IF UNDERDRAIN, STONE AND BIORETENTION SOIL ARE INSTALLED BEFORE THE CONTRIBUTING AREA IS ESTABLISHED THEN PLACE SILT FENCE AROUND THE INTERIOR EDGE OF THE BIORETENTION AREA.
3. ALL AREAS NOT RECEIVING SPECIFIC SURFACE TREATMENT (ASPHALT, CONCRETE, STONE, MULCH, ECT.) SHALL RECEIVE TOPSOIL AND SEED. DETAIL C500/104.
4. COORDINATE WITH PLUMBER AND PLUMBING DRAWINGS FOR CONNECTIONS TO BUILDING PLUMBING AND PLUMBING DETAILS.
5. RESTORE ALL DISTURBED AREAS OUTSIDE OF LIMIT OF GRADING USING DETAIL C-500/104.
6. CONNECT TO DOWNSPOUTS USING DETAIL C-501/112.
7. PUMP STATION SHALL NOT BE INSTALLED UNTIL AFTER SUB HEAD QUARTERS AND SEPTIC SYSTEM ARE INSTALLED, OPERATIONAL, AND PERMITTED. COORDINATE WITH DIRECTOR'S REPRESENTATIVE TO SHUT OFF WATER TO HOUSE AND TRAILERS DURING INSTALLATION.

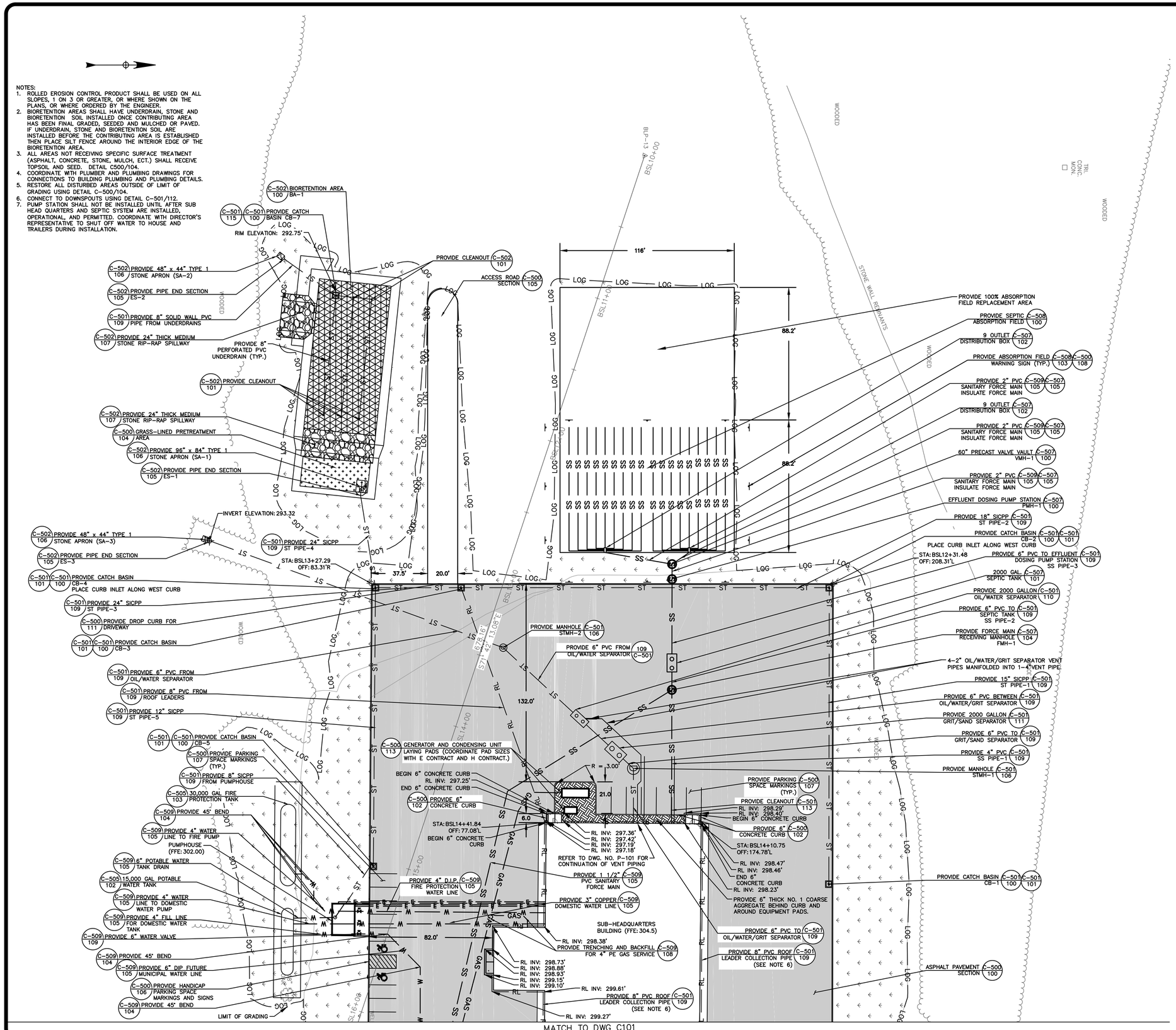

LEGEND

EXISTING / PROPOSED

- MULTI-POST SIGN
- SIGN
- DELINEATOR
- DECIDUOUS TREE
- CONIFEROUS TREE
- CONIFEROUS SHRUB
- UNKNOWN VENT
- LANDSCAPE ROCK
- POST
- FLAGPOLE
- ELECTRIC METER
- WATER VALVE
- FIRE HYDRANT
- WATER MANHOLE
- GAS MANHOLE
- GAS METER
- SANITARY MANHOLE
- STORM MANHOLE
- SQUARE CATCH BASIN
- DRAINAGE INVERT
- LIGHT POLE
- UTILITY POLE
- BASELINE POINT
- BENCHMARK
- BORING/TEST PIT LOCATION
- PROPERTY MONUMENT
- 945 MAJOR CONTOUR 945
- MINOR CONTOUR
- ST STORM SEWER ST
- ROOF LEADER(RL) RL
- SS SANITARY SEWER SS
- W WATER LINE W
- ELECTRIC LINE E
- G GAS LINE GAS
- OHE OH ELECTRIC
- OH TELECOM
- PLASTIC BARRIER FENCE
- SILT FENCE
- LIMIT OF GRADING LOG
- FENCE X
- REMOVALS X
- EDGE OF WOODS
- CONSTRUCTION ENTRANCE
- ROLLED EROSION CONTROL MAT
- PROPOSED PAVEMENT
- TREE REMOVAL
- PAVEMENT REMOVAL
- LAWN RESTORATION
- BIORETENTION AREA
- PRETREATMENT AREA
- SPILLWAY/STONE APRON
- CRUSHED STONE
- TOP OF CURB T.C.
- BOTTOM OF CURB B.C.

0 30 60 Feet

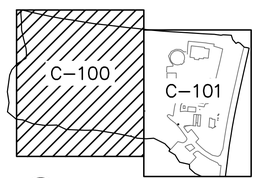

KEYMAP

NEW YORK STATE OF OPPORTUNITY. Office of General Services
DESIGN & CONSTRUCTION

CONSULTANT:
SHUMAKER
Consulting Engineering & Land Surveying, D.P.C.

WARNING:
THE ALTERATION OF THIS MATERIAL IN ANY WAY, UNLESS DONE UNDER THE DIRECTION OF A COMPARABLE PROFESSIONAL, I.E. ARCHITECT FOR AN ARCHITECT, ENGINEER FOR AN ENGINEER OR LANDSCAPE ARCHITECT FOR A LANDSCAPE ARCHITECT, IS A VIOLATION OF THE NEW YORK STATE EDUCATION LAW AND/OR REGULATIONS AND IS A CLASS 'A' MISDEMEANOR.

STATE OF NEW YORK · JAMES M. CUMMINGS · 080958 · LICENSED PROFESSIONAL ENGINEER

CONTRACT:
CONSTRUCTION

TITLE:
PROVIDE SUB-HEADQUARTERS BUILDING

LOCATION:
DOT REGION 8, DUTCHESS COUNTY
205 LIME KILN RD.
EAST FISHKILL,NEW YORK 12533

CLIENT:
NEW YORK STATE DEPARTMENT OF TRANSPORTATION

MARK	DATE	DESCRIPTION
	10/17/2019	BID DOCUMENTS

PROJECT NUMBER:	45552-C
DESIGNED BY:	EFN
DRAWN BY:	AWR
FIELD CHECK:	
APPROVED:	JMC

SHEET TITLE:
SITE LAYOUT /SITE PLANS/UTILITY PLANS

DRAWING NUMBER:
C-100

36x24 PLOT SHEET

Mar 16,2020 – 1:07pm
E:\2017\17095-East Fishkill NYSDOT Site\Design\PLANS\17095_C100-C101_Site_Layout_Site_Plans_Utility_Plans.dwg

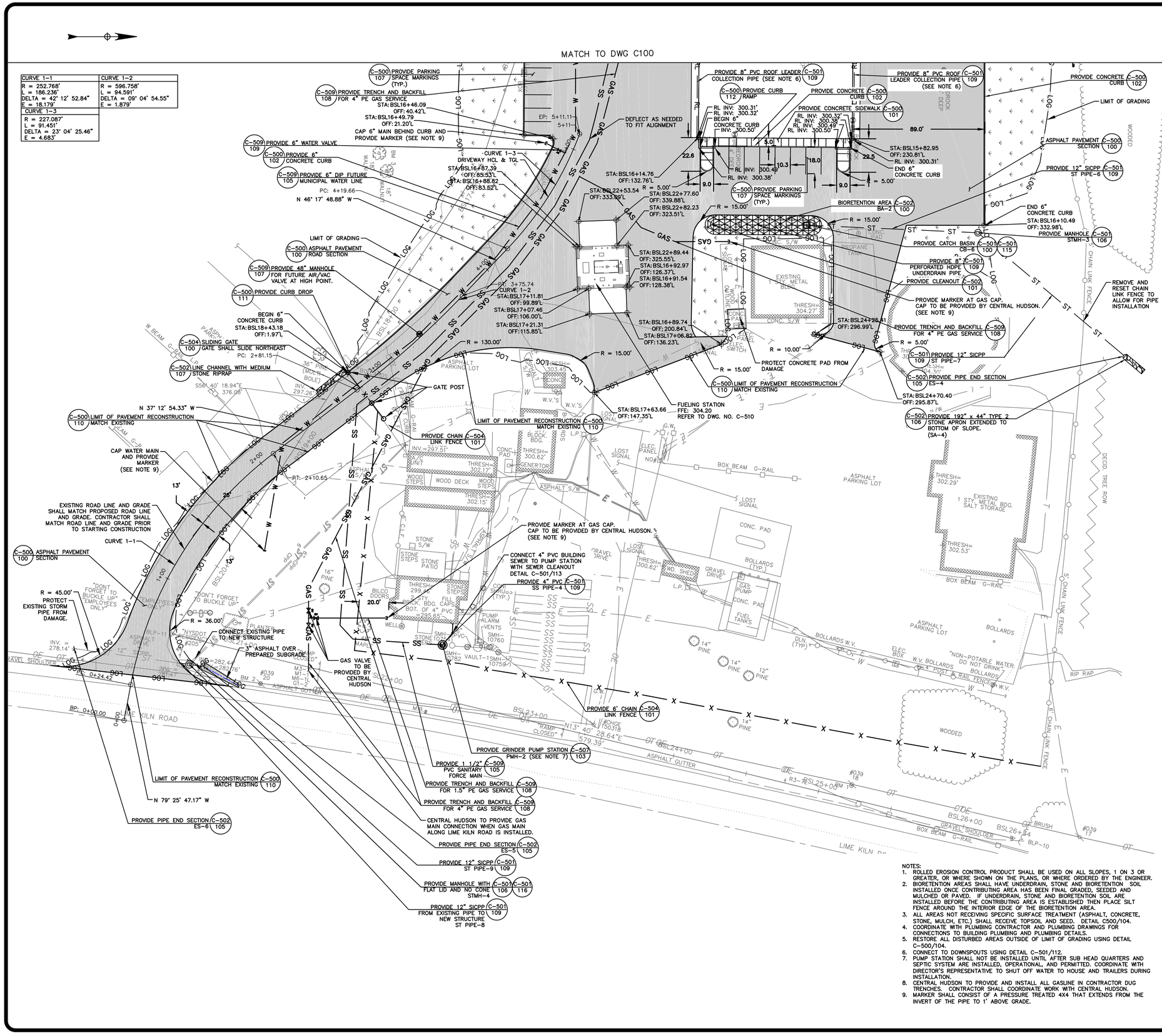

LEGEND

EXISTING		PROPOSED
	MULTI-POST SIGN	
	SIGN	
	DELINEATOR	
	DECIDUOUS TREE	
	CONIFEROUS TREE	
	CONIFEROUS SHRUB	
	UNKNOWN VENT	
	LANDSCAPE ROCK	
	POST	
	FLAGPOLE	
	ELECTRIC METER	
	WATER VALVE	
	FIRE HYDRANT	
	WATER MANHOLE	
	GAS MANHOLE	
	GAS METER	
	SANITARY MANHOLE	
	STORM MANHOLE	
	SQUARE CATCH BASIN	
	DRAINAGE INVERT	
	LIGHT POLE	
	UTILITY POLE	
	BASELINE POINT	
	BENCHMARK	
	BORING/TEST PIT LOCATION	
	PROPERTY MONUMENT	
945	MAJOR CONTOUR	945
	MINOR CONTOUR	
ST	STORM SEWER	ST
	ROOF LEADER(RL)	RL
SS	SANITARY SEWER	SS
W	WATER LINE	W
	ELECTRIC LINE	E
G	GAS LINE	GAS
OHE	OH ELECTRIC	
	OH TELECOM	
	PLASTIC BARRIER FENCE	
	SILT FENCE	
	LIMIT OF GRADING	LOG
	FENCE	X
	REMOVALS	
	EDGE OF WOODS	
	CONSTRUCTION ENTRANCE	
	ROLLED EROSION CONTROL MAT	
	PROPOSED PAVEMENT	
	TREE REMOVAL	
	PAVEMENT REMOVAL	
	LAWN RESTORATION	
	BIORETENTION AREA	
	PRETREATMENT AREA	
	SPILLWAY/STONE APRON	
	CRUSHED STONE	
	TOP OF CURB	T.C.
	BOTTOM OF CURB	B.C.

0 30 60 Feet

NOTES:
1. ROLLED EROSION CONTROL PRODUCT SHALL BE USED ON ALL SLOPES, 1 ON 3 OR GREATER, OR WHERE SHOWN ON THE PLANS, OR WHERE ORDERED BY THE ENGINEER.
2. BIORETENTION AREAS SHALL HAVE UNDERDRAIN, STONE AND BIORETENTION SOIL INSTALLED ONCE CONTRIBUTING AREA HAS BEEN FINAL GRADED, SEEDED AND MULCHED OR PAVED. IF UNDERDRAIN, STONE AND BIORETENTION SOIL ARE INSTALLED BEFORE THE CONTRIBUTING AREA IS ESTABLISHED THEN PLACE SILT FENCE AROUND THE INTERIOR EDGE OF THE BIORETENTION AREA.
3. ALL AREAS NOT RECEIVING SPECIFIC SURFACE TREATMENT (ASPHALT, CONCRETE, STONE, MULCH, ETC.) SHALL RECEIVE TOPSOIL AND SEED. DETAIL C500/104.
4. COORDINATE WITH PLUMBING CONTRACTOR AND PLUMBING DRAWINGS FOR CONNECTIONS TO BUILDING PLUMBING AND PLUMBING DETAILS.
5. RESTORE ALL DISTURBED AREAS OUTSIDE OF LIMIT OF GRADING USING DETAIL C-500/104.
6. CONNECT TO DOWNSPOUTS USING DETAIL C-501/112.
7. PUMP STATION SHALL NOT BE INSTALLED UNTIL AFTER SUB HEAD QUARTERS AND SEPTIC SYSTEM ARE INSTALLED, OPERATIONAL, AND PERMITTED. COORDINATE WITH DIRECTOR'S REPRESENTATIVE TO SHUT OFF WATER TO HOUSE AND TRAILERS DURING INSTALLATION.
8. CENTRAL HUDSON TO PROVIDE AND INSTALL ALL GASLINE IN CONTRACTOR DUG TRENCHES. CONTRACTOR SHALL COORDINATE WORK WITH CENTRAL HUDSON.
9. MARKER SHALL CONSIST OF A PRESSURE TREATED 4X4 THAT EXTENDS FROM THE INVERT OF THE PIPE TO 1' ABOVE GRADE.

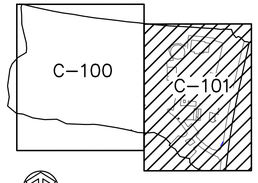

KEYMAP

NEW YORK STATE OF OPPORTUNITY. Office of General Services
DESIGN & CONSTRUCTION

CONSULTANT:
SHUMAKER
Consulting Engineering & Land Surveying, D.P.C.

WARNING:
THE ALTERATION OF THIS MATERIAL IN ANY WAY, UNLESS DONE UNDER THE DIRECTION OF A COMPARABLE PROFESSIONAL, I.E. ARCHITECT FOR AN ARCHITECT, ENGINEER FOR AN ENGINEER OR LANDSCAPE ARCHITECT FOR A LANDSCAPE ARCHITECT, IS A VIOLATION OF THE NEW YORK STATE EDUCATION LAW AND/OR REGULATIONS AND IS A CLASS 'A' MISDEMEANOR.

STATE OF NEW YORK · JAMES M. CUMMINGS · 080958 · LICENSED PROFESSIONAL ENGINEER

CONTRACT:
CONSTRUCTION

TITLE:
PROVIDE SUB-HEADQUARTERS BUILDING

LOCATION:
DOT REGION 8, DUTCHESS COUNTY
205 LIME KILN RD.
EAST FISHKILL,NEW YORK 12533

CLIENT:
NEW YORK STATE DEPARTMENT OF TRANSPORTATION

MARK	DATE	DESCRIPTION
	10/17/2019	BID DOCUMENTS

PROJECT NUMBER:	45552-C
DESIGNED BY:	EFN
DRAWN BY:	AWR
FIELD CHECK:	
APPROVED:	JMC

SHEET TITLE:
SITE LAYOUT /SITE PLANS/UTILITY PLANS

DRAWING NUMBER:
C-101

Mar 16,2020 – 1:07pm
E:\2017\17095-East Fishkill NYSDOT Site\Design\PLANS\17095_C100-C101_Site_Layout_Site_Plans_Utility_Plans.dwg

36x24 PLOT SHEET

NOTES:
1. BIORETENTION AREAS SHALL HAVE UNDERDRAIN, STONE AND BIORETENTION SOIL INSTALLED ONCE CONTRIBUTING AREA HAS BEEN FINAL GRADED, SEEDED AND MULCHED OR PAVED. IF UNDERDRAIN, STONE AND BIORETENTION SOIL ARE INSTALLED BEFORE THE CONTRIBUTING AREA IS ESTABLISHED THEN PLACE SILT FENCE AROUND THE INTERIOR EDGE OF THE BIORETENTION AREA.

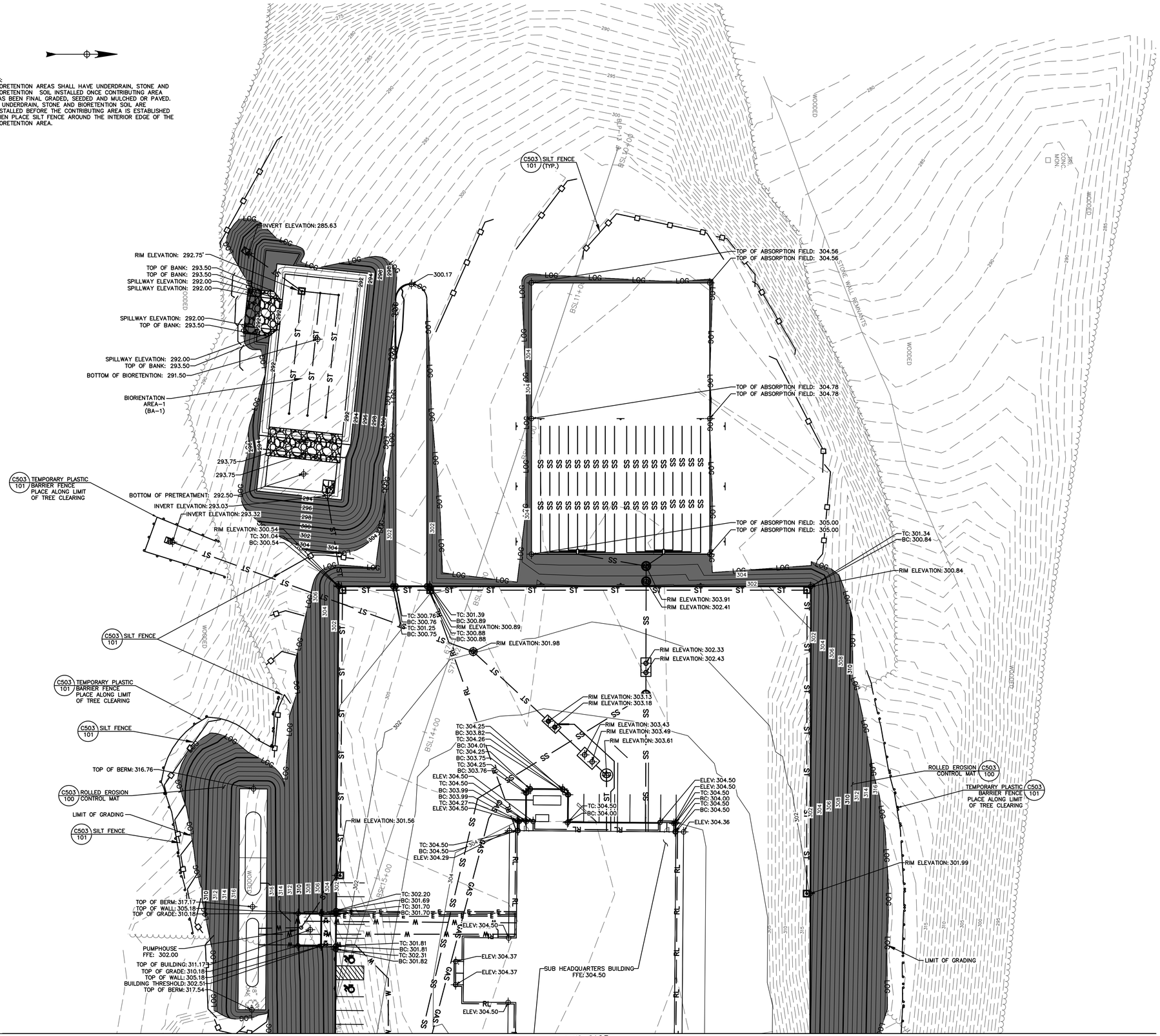

MATCH TO DWG C103

LEGEND

EXISTING		PROPOSED
	MULTI-POST SIGN	
	SIGN	
	DELINEATOR	
	DECIDUOUS TREE	
	CONIFEROUS TREE	
	CONIFEROUS SHRUB	
	UNKNOWN VENT	
	LANDSCAPE ROCK	
	POST	
	FLAGPOLE	
	ELECTRIC METER	
	WATER VALVE	
	FIRE HYDRANT	
	WATER MANHOLE	
	GAS MANHOLE	
	GAS METER	
	SANITARY MANHOLE	
	STORM MANHOLE	
	SQUARE CATCH BASIN	
	DRAINAGE INVERT	
	LIGHT POLE	
	UTILITY POLE	
	BASELINE POINT	
	BENCHMARK	
	BORING/TEST PIT LOCATION	
	PROPERTY MONUMENT	
945	MAJOR CONTOUR	945
	MINOR CONTOUR	
ST	STORM SEWER	ST
	ROOF LEADER(RL)	RL
SS	SANITARY SEWER	SS
W	WATER LINE	W
	ELECTRIC LINE	E
G	GAS LINE	GAS
OHE	OH ELECTRIC	
	OH TELECOM	
	PLASTIC BARRIER FENCE	
	SILT FENCE	
	LIMIT OF GRADING	LOG
	FENCE	X
	REMOVALS	X
	EDGE OF WOODS	
	CONSTRUCTION ENTRANCE	
	ROLLED EROSION CONTROL MAT	
	PROPOSED PAVEMENT	
	TREE REMOVAL	
	PAVEMENT REMOVAL	
	LAWN RESTORATION	
	BIORETENTION AREA	
	PRETREATMENT AREA	
	SPILLWAY/STONE APRON	
	CRUSHED STONE	
	TOP OF CURB	T.C.
	BOTTOM OF CURB	B.C.

0 30 60 FEET

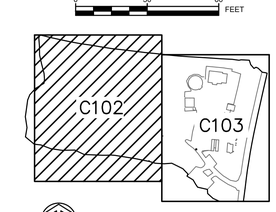

KEYMAP

NEW YORK STATE OF OPPORTUNITY. Office of General Services
DESIGN & CONSTRUCTION

CONSULTANT:
SHUMAKER Consulting Engineering & Land Surveying, D.P.C.

WARNING:
THE ALTERATION OF THIS MATERIAL IN ANY WAY, UNLESS DONE UNDER THE DIRECTION OF A COMPARABLE PROFESSIONAL, I.E. ARCHITECT FOR AN ARCHITECT, ENGINEER FOR AN ENGINEER OR LANDSCAPE ARCHITECT FOR A LANDSCAPE ARCHITECT, IS A VIOLATION OF THE NEW YORK STATE EDUCATION LAW AND/OR REGULATIONS AND IS A CLASS 'A' MISDEMEANOR.

STATE OF NEW YORK · JAMES M. CUMMINGS · 080958 · LICENSED PROFESSIONAL ENGINEER

CONTRACT:
CONSTRUCTION

TITLE:
PROVIDE SUB-HEADQUARTERS BUILDING

LOCATION:
DOT REGION 8, DUTCHESS COUNTY
205 LIME KILN RD.
EAST FISHKILL,NEW YORK 12533

CLIENT:
NEW YORK STATE DEPARTMENT OF TRANSPORTATION

MARK	DATE	DESCRIPTION
	10/17/2019	BID DOCUMENTS

PROJECT NUMBER:	45552-C
DESIGNED BY:	EFN
DRAWN BY:	AWR
FIELD CHECK:	
APPROVED:	JMC

SHEET TITLE:
GRADING/EROSION AND SEDIMENT CONTROL PLANS

DRAWING NUMBER:
C-102

36x24 PLOT SHEET

Mar 16,2020 - 1:08pm
E:\2017\17095-East Fishkill NYSDOT Site\Design\PLANS\17095_C102-C103_Grading_Erosion_and _Sediment_Control_Plans.dwg

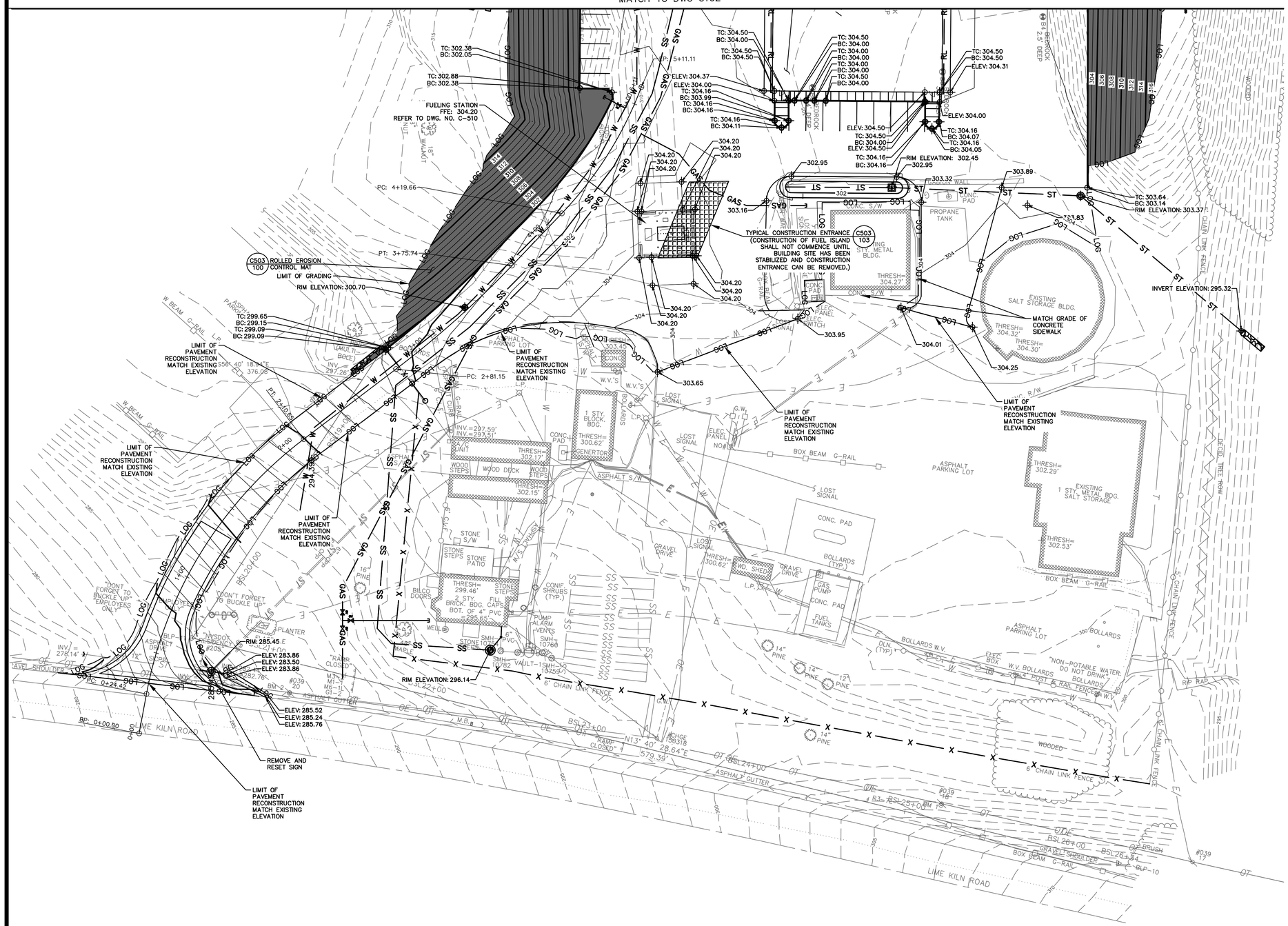

LEGEND

EXISTING		PROPOSED
	MULTI-POST SIGN	
	SIGN	
	DELINEATOR	
	DECIDUOUS TREE	
	CONIFEROUS TREE	
	CONIFEROUS SHRUB	
	UNKNOWN VENT	
	LANDSCAPE ROCK	
	POST	
	FLAGPOLE	
	ELECTRIC METER	
	WATER VALVE	
	FIRE HYDRANT	
	WATER MANHOLE	
	GAS MANHOLE	
	GAS METER	
	SANITARY MANHOLE	
	STORM MANHOLE	
	SQUARE CATCH BASIN	
	DRAINAGE INVERT	
	LIGHT POLE	
	UTILITY POLE	
	BASELINE POINT	
	BENCHMARK	
	BORING/TEST PIT LOCATION	
	PROPERTY MONUMENT	
945 MAJOR CONTOUR		945
MINOR CONTOUR		
ST STORM SEWER		ST
	ROOF LEADER(RL)	RL
SS SANITARY SEWER		SS
W WATER LINE		W
ELECTRIC LINE		E
G GAS LINE		GAS
OHE OH ELECTRIC		
OH TELECOM		
PLASTIC BARRIER FENCE		
SILT FENCE		
LIMIT OF GRADING		LOG
FENCE		X
REMOVALS		X
EDGE OF WOODS		
CONSTRUCTION ENTRANCE		
ROLLED EROSION CONTROL MAT		
PROPOSED PAVEMENT		
TREE REMOVAL		
PAVEMENT REMOVAL		
LAWN RESTORATION		
BIORETENTION AREA		
PRETREATMENT AREA		
SPILLWAY/STONE APRON		
CRUSHED STONE		
TOP OF CURB	T.C.	
BOTTOM OF CURB	B.C.	

0 30 60 FEET

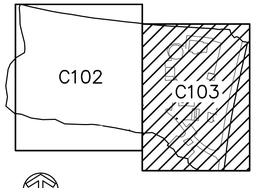

KEYMAP

NEW YORK STATE OF OPPORTUNITY. Office of General Services

DESIGN & CONSTRUCTION

CONSULTANT:

SHUMAKER Consulting Engineering & Land Surveying, D.P.C.

WARNING:

THE ALTERATION OF THIS MATERIAL IN ANY WAY, UNLESS DONE UNDER THE DIRECTION OF A COMPARABLE PROFESSIONAL, I.E. ARCHITECT FOR AN ARCHITECT, ENGINEER FOR AN ENGINEER OR LANDSCAPE ARCHITECT FOR A LANDSCAPE ARCHITECT, IS A VIOLATION OF THE NEW YORK STATE EDUCATION LAW AND/OR REGULATIONS AND IS A CLASS 'A' MISDEMEANOR.

STATE OF NEW YORK · JAMES M. CUMMINGS · 080958 · LICENSED PROFESSIONAL ENGINEER

CONTRACT:

CONSTRUCTION

TITLE:

PROVIDE SUB-HEADQUARTERS BUILDING

LOCATION:

DOT REGION 8, DUTCHESS COUNTY
205 LIME KILN RD.
EAST FISHKILL,NEW YORK 12533

CLIENT:

NEW YORK STATE DEPARTMENT OF TRANSPORTATION

MARK	DATE	DESCRIPTION
	10/17/2019	BID DOCUMENTS

PROJECT NUMBER:	45552-C
DESIGNED BY:	EFN
DRAWN BY:	AWR
FIELD CHECK:	
APPROVED:	JMC

SHEET TITLE:

GRADING/EROSION AND SEDIMENT CONTROL PLANS

DRAWING NUMBER:

C-103

Mar 16,2020 – 1:08pm
E:\2017\17095-East Fishkill NYSDOT Site\Design\PLANS\17095_C102-C103_Grading_Erosion_and _Sediment_Control_Plans.dwg

36x24 PLOT SHEET

DRIVEWAY CENTERLINE PROFILE

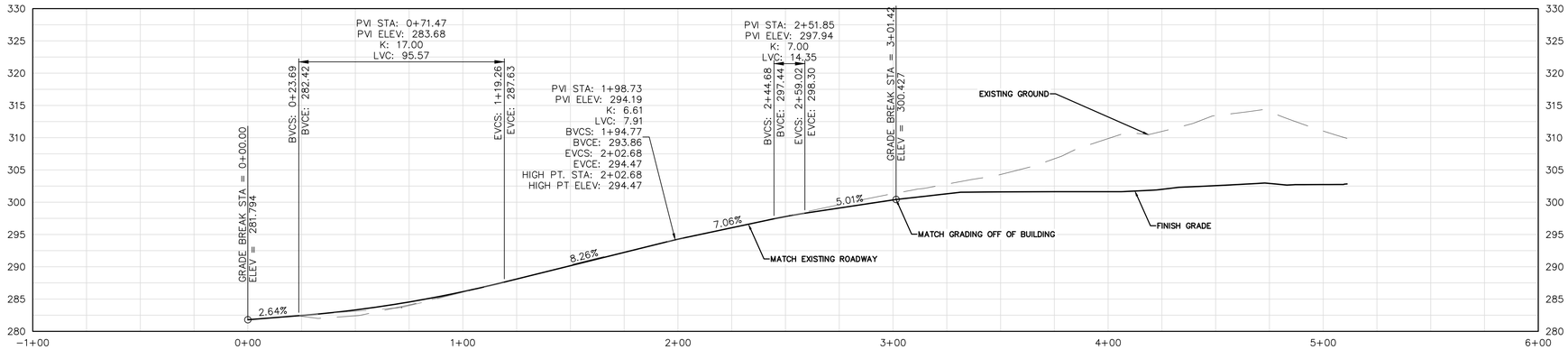

CB–5 TO CB–4

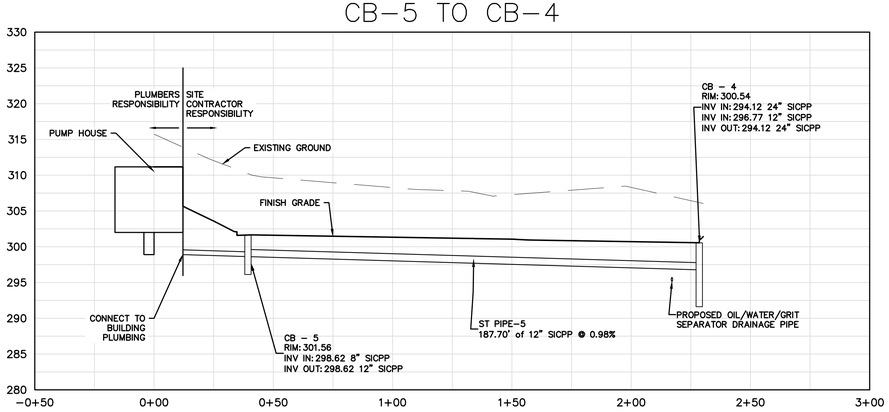

BA–2 TO OUTLET

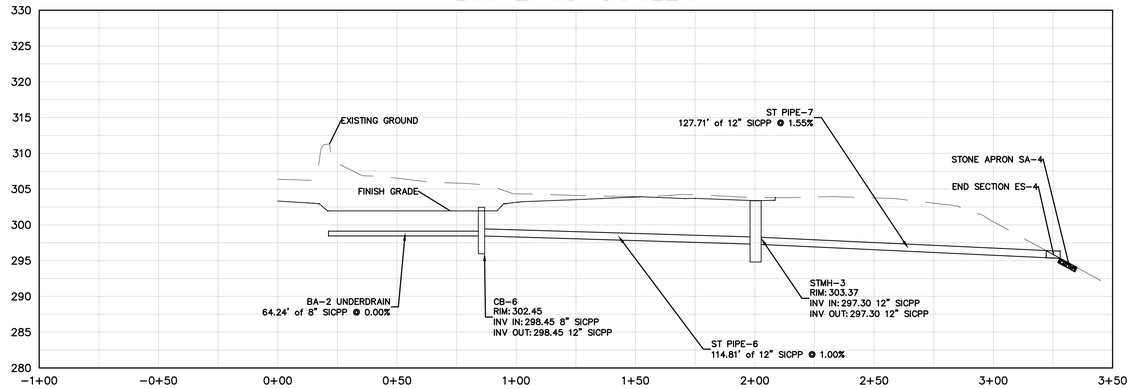

CB–1 TO BIORETENTION

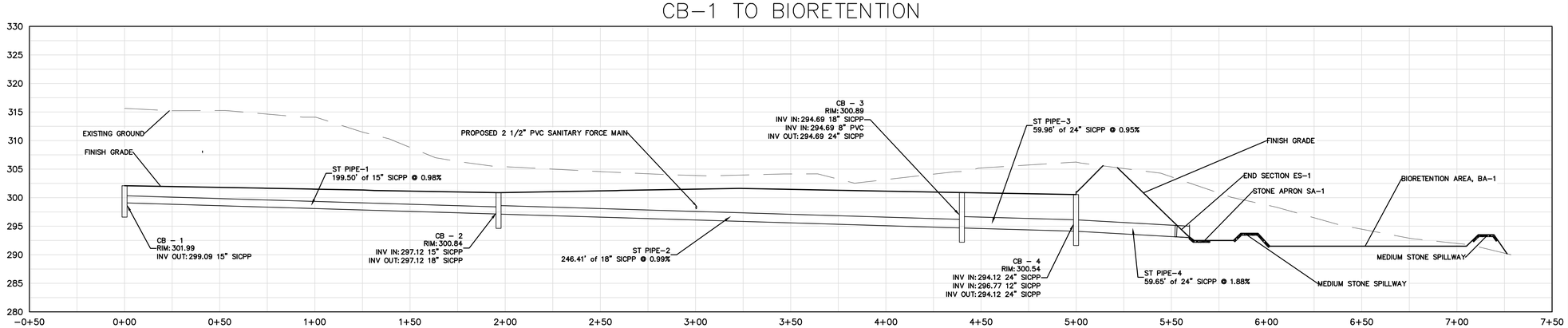

VERTICAL SCALE
0 30 60 Feet

HORIZONTAL SCALE
0 30 60 Feet

36x24 PLOT SHEET

Mar 16,2020 – 1:09pm
E:\2017\17095-East Fishkill NYSDOT Site\Design\PLANS\17095_C300_C301_C302_Road_and_Utility_Profiles.dwg

NEW YORK STATE OF OPPORTUNITY. Office of General Services
DESIGN & CONSTRUCTION

CONSULTANT:
SHUMAKER
Consulting Engineering & Land Surveying, D.P.C.

WARNING:
THE ALTERATION OF THIS MATERIAL IN ANY WAY, UNLESS DONE UNDER THE DIRECTION OF A COMPARABLE PROFESSIONAL, I.E. ARCHITECT FOR AN ARCHITECT, ENGINEER FOR AN ENGINEER OR LANDSCAPE ARCHITECT FOR A LANDSCAPE ARCHITECT, IS A VIOLATION OF THE NEW YORK STATE EDUCATION LAW AND/OR REGULATIONS AND IS A CLASS 'A' MISDEMEANOR.

STATE OF NEW YORK · JAMES M. CUMMINGS · 080958 · LICENSED PROFESSIONAL ENGINEER

CONTRACT:
CONSTRUCTION

TITLE:
PROVIDE SUB-HEADQUARTERS BUILDING

LOCATION:
DOT REGION 8, DUTCHESS COUNTY
205 LIME KILN RD.
EAST FISHKILL,NEW YORK 12533

CLIENT:
NEW YORK STATE DEPARTMENT OF TRANSPORTATION

MARK	DATE	DESCRIPTION
	10/17/2019	BID DOCUMENTS

PROJECT NUMBER:	45552-C
DESIGNED BY:	EFN
DRAWN BY:	AWR
FIELD CHECK:	
APPROVED:	JMC

SHEET TITLE:
ROAD PROFILE/ UTILITY PROFILES

DRAWING NUMBER:
C-300

BUILDING TRENCH DRAIN OUTLET PIPE

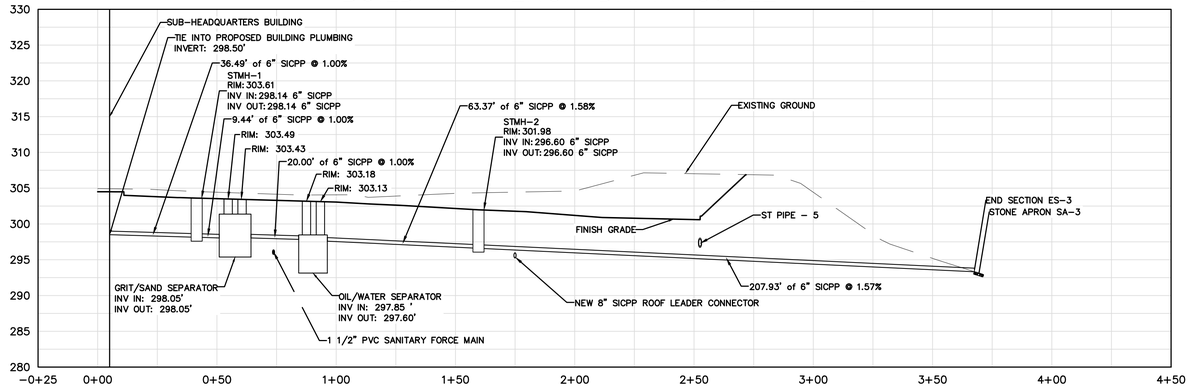

SANITARY SEWER

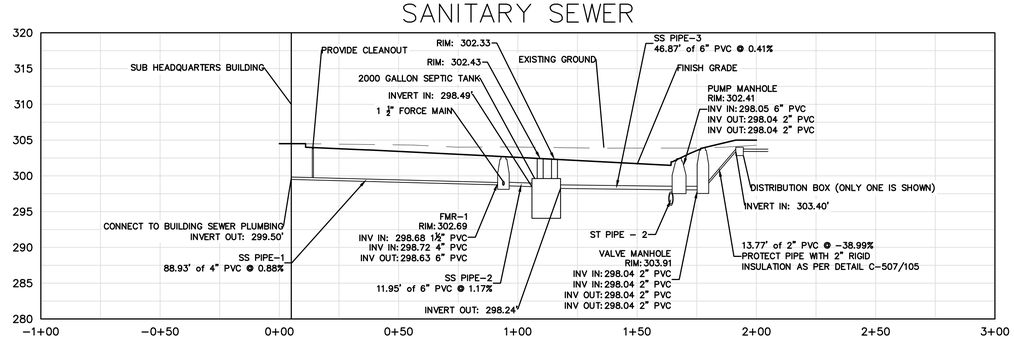

FORCE MAIN

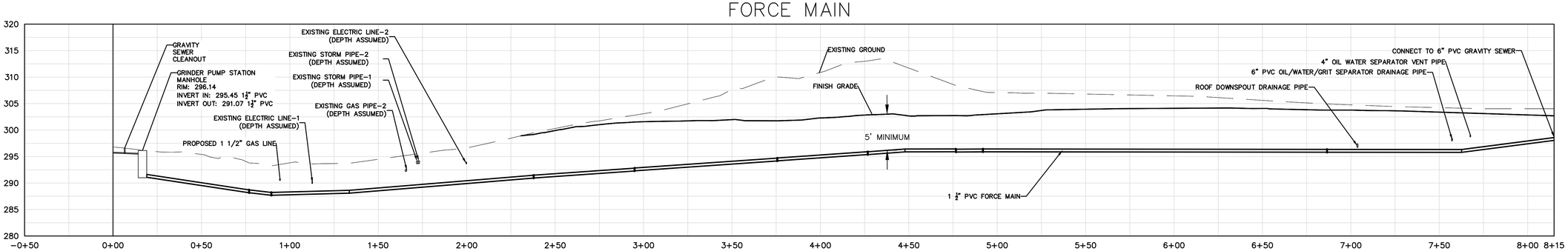

VERTICAL SCALE
0 30 60 Feet

HORIZONTAL SCALE
0 30 60 Feet

36x24 PLOT SHEET

Mar 16,2020 - 1:09pm
E:\2017\17095-East Fishkill NYSDOT Site\Design\PLANS\17095_C300_C301_C302_Road_and_Utility_Profiles.dwg

NEW YORK STATE OF OPPORTUNITY. Office of General Services

DESIGN & CONSTRUCTION

CONSULTANT:

SHUMAKER
Consulting Engineering & Land Surveying, D.P.C.

WARNING:

THE ALTERATION OF THIS MATERIAL IN ANY WAY, UNLESS DONE UNDER THE DIRECTION OF A COMPARABLE PROFESSIONAL, I.E. ARCHITECT FOR AN ARCHITECT, ENGINEER FOR AN ENGINEER OR LANDSCAPE ARCHITECT FOR A LANDSCAPE ARCHITECT, IS A VIOLATION OF THE NEW YORK STATE EDUCATION LAW AND/OR REGULATIONS AND IS A CLASS 'A' MISDEMEANOR.

STATE OF NEW YORK
JAMES M. CUMMINGS
080958
LICENSED PROFESSIONAL ENGINEER

CONTRACT:
CONSTRUCTION

TITLE:
PROVIDE SUB-HEADQUARTERS BUILDING

LOCATION:
DOT REGION 8, DUTCHESS COUNTY
205 LIME KILN RD.
EAST FISHKILL,NEW YORK 12533

CLIENT:
NEW YORK STATE DEPARTMENT OF TRANSPORTATION

MARK	DATE	DESCRIPTION
	10/17/2019	BID DOCUMENTS

PROJECT NUMBER:	45552-C
DESIGNED BY:	EFN
DRAWN BY:	AWR
FIELD CHECK:	
APPROVED:	JMC

SHEET TITLE:
OIL/WATER SEPARATOR AND SEPTIC SYSTEM PROFILES

DRAWING NUMBER:
C-301

FIRE PROTECTION TANK CROSS SECTION

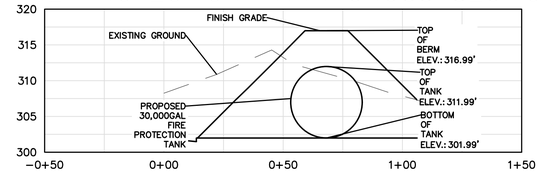

POTABLE WATER TANK CROSS SECTION

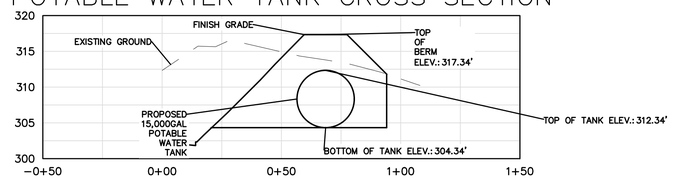

WATER TANKS SECTIONS

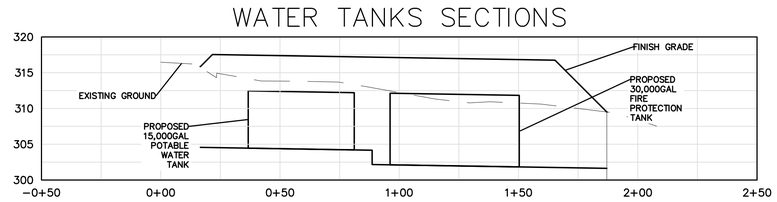

VERTICAL SCALE

0 30 60 Feet

HORIZONTAL SCALE

0 30 60 Feet

36x24 PLOT SHEET

Mar 16,2020 – 1:09pm
E:\2017\17095-East Fishkill NYSDOT Site\Design\PLANS\17095_C300_C301_C302_Road_and_Utility_Profiles.dwg

NEW YORK STATE OF OPPORTUNITY. Office of General Services

DESIGN & CONSTRUCTION

CONSULTANT:

SHUMAKER Consulting Engineering & Land Surveying, D.P.C.

WARNING:

THE ALTERATION OF THIS MATERIAL IN ANY WAY, UNLESS DONE UNDER THE DIRECTION OF A COMPARABLE PROFESSIONAL, I.E. ARCHITECT FOR AN ARCHITECT, ENGINEER FOR AN ENGINEER OR LANDSCAPE ARCHITECT FOR A LANDSCAPE ARCHITECT, IS A VIOLATION OF THE NEW YORK STATE EDUCATION LAW AND/OR REGULATIONS AND IS A CLASS 'A' MISDEMEANOR.

STATE OF NEW YORK · JAMES M. CUMMINGS · 080958 · LICENSED PROFESSIONAL ENGINEER

CONTRACT:

CONSTRUCTION

TITLE:

PROVIDE SUB-HEADQUARTERS BUILDING

LOCATION:

DOT REGION 8, DUTCHESS COUNTY
205 LIME KILN RD.
EAST FISHKILL,NEW YORK 12533

CLIENT:

NEW YORK STATE DEPARTMENT OF TRANSPORTATION

MARK	DATE	DESCRIPTION
	10/17/2019	BID DOCUMENTS

PROJECT NUMBER:	45552-C
DESIGNED BY:	EFN
DRAWN BY:	AWR
FIELD CHECK:	
APPROVED:	JMC

SHEET TITLE:

POTABLE WATER TANK AND FIRE SUPPRESSION TANK CROSS SECTIONS

DRAWING NUMBER:

C-302

POTABLE MUNICIPAL LINE

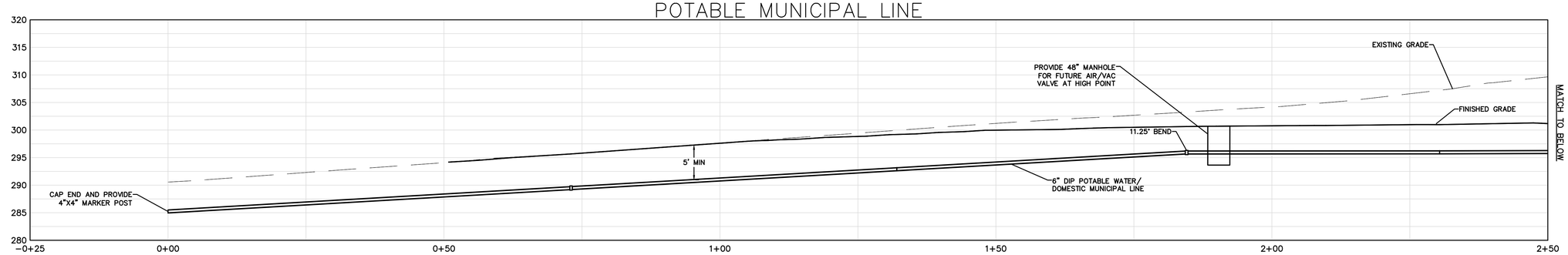

POTABLE MUNICIPAL LINE

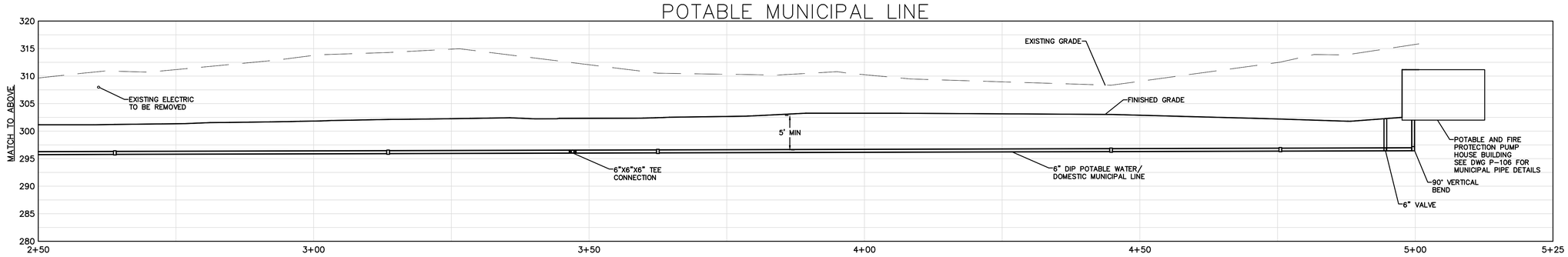

FIRE PROTECTION TO STRUCTURE

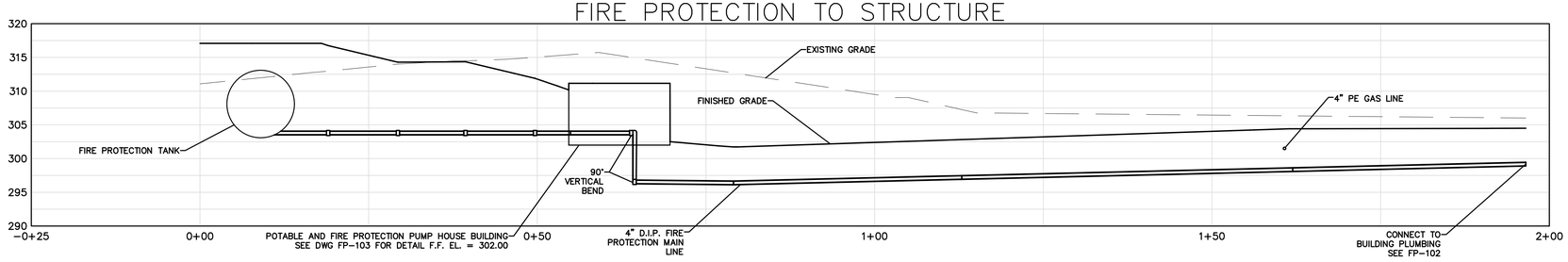

WATER TANK DRAIN

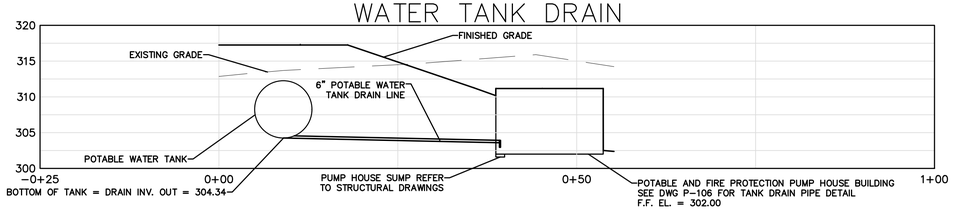

POTABLE TANK FILL LINE

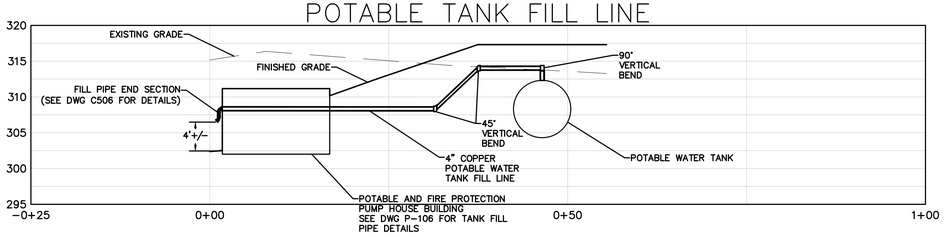

WATER TANK TO STRUCTURE

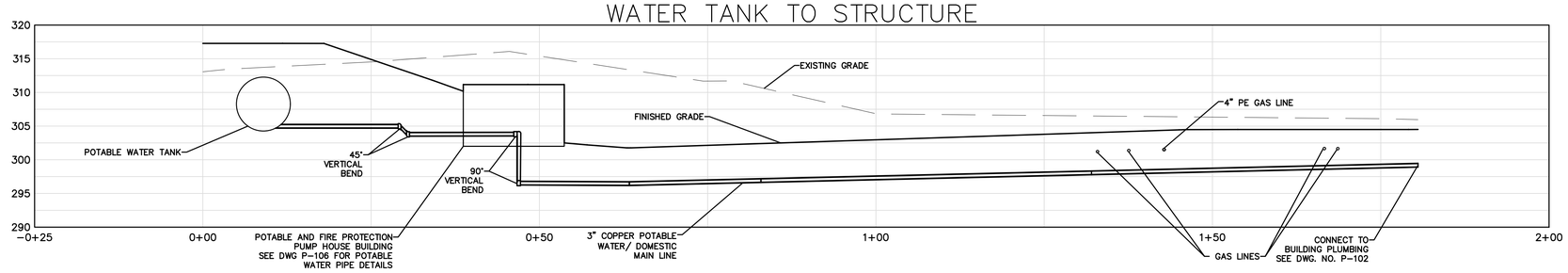

VERTICAL SCALE
0 10 20 Feet

HORIZONTAL SCALE
0 10 20 Feet

38x24 PLOT SHEET

Mar 16,2020 – 1:09pm
E:\2017\17095-East Fishkill NYSDOT Site\Design\PLANS\17095_C300_C301_C302_Road_and_Utility_Profiles.dwg

NEW YORK STATE OF OPPORTUNITY. Office of General Services

DESIGN & CONSTRUCTION

CONSULTANT:

SHUMAKER Consulting Engineering & Land Surveying, D.P.C.

WARNING:

THE ALTERATION OF THIS MATERIAL IN ANY WAY, UNLESS DONE UNDER THE DIRECTION OF A COMPARABLE PROFESSIONAL, I.E. ARCHITECT FOR AN ARCHITECT, ENGINEER FOR AN ENGINEER OR LANDSCAPE ARCHITECT FOR A LANDSCAPE ARCHITECT, IS A VIOLATION OF THE NEW YORK STATE EDUCATION LAW AND/OR REGULATIONS AND IS A CLASS 'A' MISDEMEANOR.

STATE OF NEW YORK · JAMES M. CUMMINGS · 080958 · LICENSED PROFESSIONAL ENGINEER

CONTRACT:
CONSTRUCTION

TITLE:
PROVIDE SUB-HEADQUARTERS BUILDING

LOCATION:
DOT REGION 8, DUTCHESS COUNTY
205 LIME KILN RD.
EAST FISHKILL,NEW YORK 12533

CLIENT:
NEW YORK STATE DEPARTMENT OF TRANSPORTATION

MARK	DATE	DESCRIPTION
	10/17/2019	BID DOCUMENTS

PROJECT NUMBER:	45552-C
DESIGNED BY:	EFN
DRAWN BY:	AWR
FIELD CHECK:	
APPROVED:	JMC

SHEET TITLE:
UTILITY PROFILES

DRAWING NUMBER:
C-303

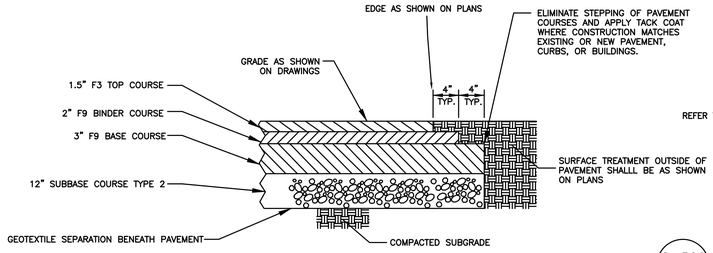

C-500 / 100 ASPHALT PAVEMENT SECTION
NOT TO SCALE

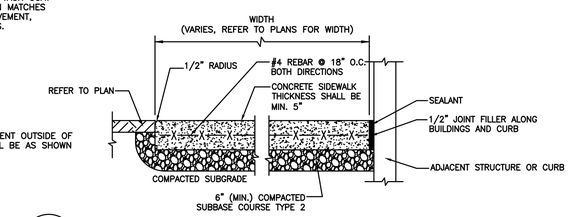

C-500 / 101 TYPICAL CONCRETE SIDEWALK RECONSTRUCTION SECTION
NOT TO SCALE

NOTES:

1. WHERE HOT MIX ASPHALT PAVEMENT IS PLACED AGAINST CONCRETE, VERTICAL FACE SHALL BE TACK COATED.
2. ALL SIDEWALK SIDE AND JOINT EDGES SHALL BE RE-EDGED FOLLOWING BROOM FINISH.
3. FINISHED SIDEWALK TO RECEIVE TWO COATS OF CLEAR CURING COMPOUND.
4. AT EXTERIOR DOOR LOCATIONS, PIN SIDEWALK TO BUILDING FOUNDATION (SEE STRUCTURAL DRAWINGS).

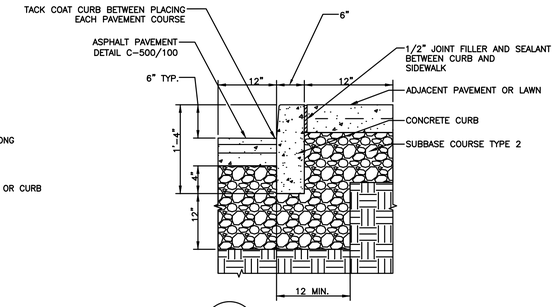

C-500 / 102 CONCRETE CURB
NOT TO SCALE

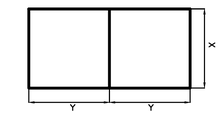

WALK WIDTH	X	Y	EXPANSION JOINT SPACING
5 FT	5	5	30'

C-500 / 103 TYPICAL SCORING PATTERN
NOT TO SCALE

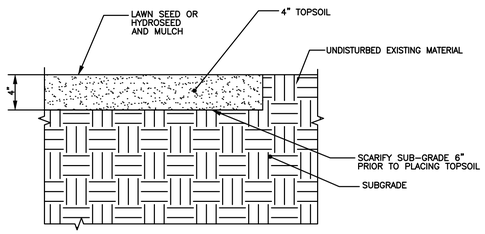

C-500 / 104 LAWN DETAIL
NOT TO SCALE

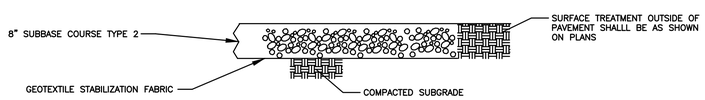

C-500 / 105 ACCESS ROAD SECTION
NOT TO SCALE

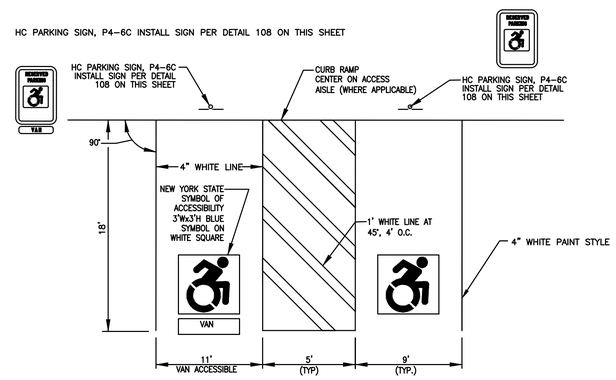

C-500 / 106 HANDICAP PARKING STRIPING
NOT TO SCALE

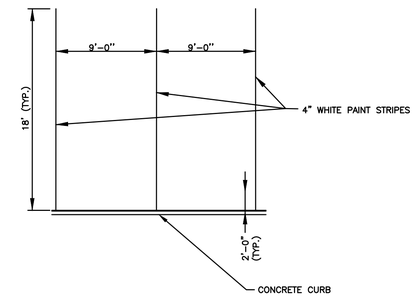

C-500 / 107 STANDARD 90 DEGREE PARKING STALL DETAIL
NOT TO SCALE

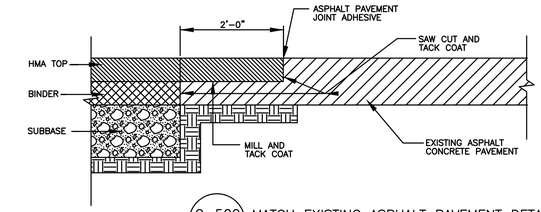

C-500 / 110 MATCH EXISTING ASPHALT PAVEMENT DETAIL
NOT TO SCALE

VERTICAL DISTANCE TO THE BOTTOM OF THE SIGN		
TABLE A	CONVENTIONAL HIGHWAYS AND EXPRESSWAYS	
	NO PARKED VEHICLES OR PEDESTRIANS	PARKED VEHICLES OR PEDESTRIANS
M.U.T.C.D. CODE R,P,W,M	5'-0"	7'-0"

LATERAL CLEARANCE TO THE EDGE OF THE SIGN			
TABLE B	URBAN CONVENTIONAL HIGHWAYS		
	SHOULDER WIDTH OF LESS THAN 6'-0"	SHOULDER WIDTH OF 6'-0" OR GREATER	CURBED SECTIONS
M.U.T.C.D. CODE R,P,W, M,G, & I	12'-0" FROM THE EDGE OF TRAVEL LANE WHERE FEASIBLE OR 2'-0" MIN.	6'-0" MIN. FROM THE SHOULDER EDGE WHERE FEASIBLE OR 2'-0" MIN.	2'-0" MIN. FROM THE CURB FACE

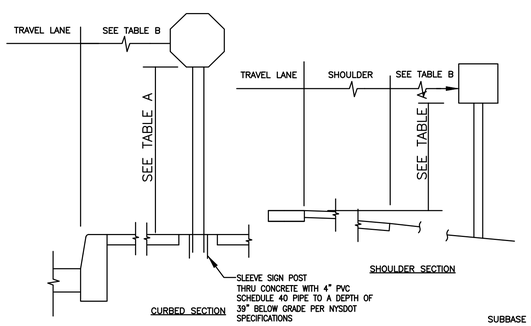

C-500 / 108 TYPICAL SIGNAGE INSTALLATION DETAIL
NOT TO SCALE

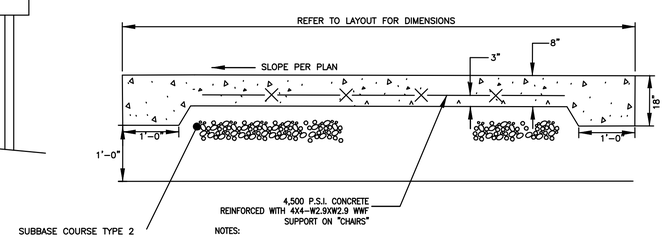

NOTES:

1. WHERE HOT MIX ASPHALT PAVEMENT IS PLACED AGAINST CONCRETE, VERTICAL FACE SHALL BE TACK COATED.

C-500 / 109 CONCRETE PAD DETAIL
NOT TO SCALE

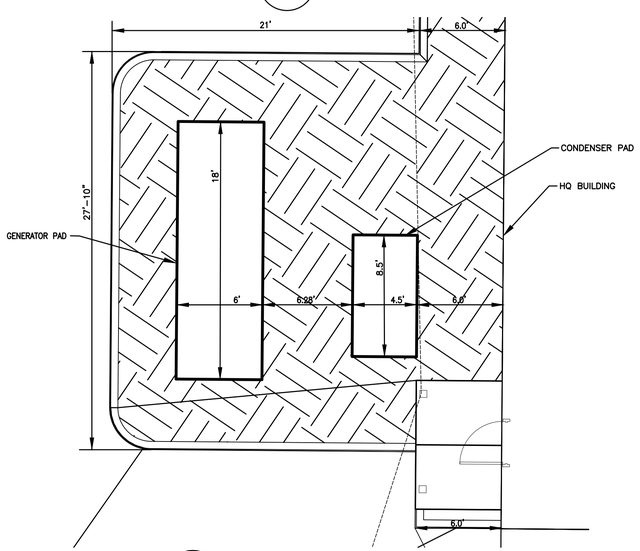

C-500 / 113 DROP CURB TRANSITION DETAIL
NOT TO SCALE

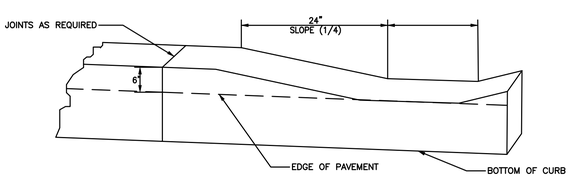

C-500 / 111 DROP CURB TRANSITION DETAIL
NOT TO SCALE

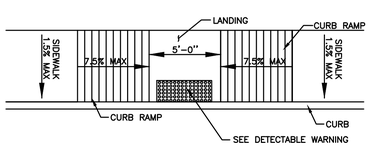

C-500 / 112 CURB RAMP DETAIL
NOT TO SCALE

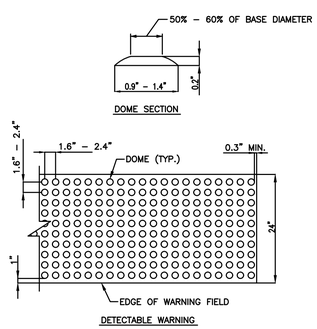

NEW YORK STATE OF OPPORTUNITY. Office of General Services
DESIGN & CONSTRUCTION

CONSULTANT:
SHUMAKER Consulting Engineering & Land Surveying, D.P.C.

WARNING:
THE ALTERATION OF THIS MATERIAL IN ANY WAY, UNLESS DONE UNDER THE DIRECTION OF A COMPARABLE PROFESSIONAL, I.E. ARCHITECT FOR AN ARCHITECT, ENGINEER FOR AN ENGINEER OR LANDSCAPE ARCHITECT FOR A LANDSCAPE ARCHITECT, IS A VIOLATION OF THE NEW YORK STATE EDUCATION LAW AND/OR REGULATIONS AND IS A CLASS 'A' MISDEMEANOR.

STATE OF NEW YORK · JAMES M. CUMMINGS · 080958 · LICENSED PROFESSIONAL ENGINEER

CONTRACT:
CONSTRUCTION

TITLE:
PROVIDE SUB-HEADQUARTERS BUILDING

LOCATION:
DOT REGION 8, DUTCHESS COUNTY
205 LIME KILN RD.
EAST FISHKILL,NEW YORK 12533

CLIENT:
NEW YORK STATE DEPARTMENT OF TRANSPORTATION

MARK	DATE	DESCRIPTION
	10/17/2019	BID DOCUMENTS

PROJECT NUMBER:	45552-C
DESIGNED BY:	EFN
DRAWN BY:	AWR
FIELD CHECK:	
APPROVED:	JMC

SHEET TITLE:
SITE DETAILS

DRAWING NUMBER:
C-500

Mar 16,2020 – 1:09pm
E:\2017\17095-East Fishkill NYSDOT Site\Design\PLANS\17095_C500_Site_Details .dwg
36x24 PLOT SHEET

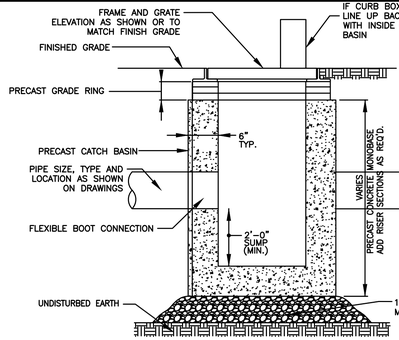

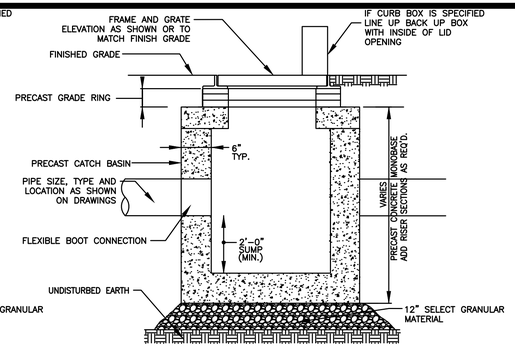

NOTES:

1. PRECAST REINFORCED CONCRETE SECTIONS SHALL CONFORM TO ASTM C-478 AND H20 REQUIREMENTS. CAST-IN-PLACE CONCRETE MAY BE SUBSTITUTED WHEN APPROVED BY DIRECTORS REPRESENTATIVE PRIOR TO CONSTRUCTION.
2. STRUCTURE SHALL BE BACK-FILLED WITH SELECT GRANULAR MATERIAL (FOR ENTIRE EXCAVATION).
3. EXCAVATION LIMITS SHALL BE 2' OUTSIDE OF STRUCTURE.

C-501/100 CATCH BASIN DETAIL
NOT TO SCALE

TABLE OF DRAINAGE STRUCTURES				
STRUCTURE NUMBER	NORTHING	EASTING	ELEVATION	INSIDE SIZE
CB-1	982819.01'	679760.16'	301.99'	24" X 36"
CB-2	982819.31'	679560.66'	300.84'	36" X 36"
CB-3	982572.89'	679560.67'	300.89'	36" X 36"
CB-4	982512.93'	679560.66'	300.54'	48" X 48"
CB-5	982511.50'	679748.36'	301.56'	24" X 36"
CB-6	982699.92'	679959.67'	302.45'	24" X 36"
CB-7	982488.78'	679368.56'	292.75'	24" X 36"
STMH-1	982686.78'	679683.15'	303.61'	48"
STMH-2	982600.13'	679602.84'	301.98'	48"
STMH-3	982814.70'	679964.65'	303.37'	48"
STMH-4	982286.02'	680254.02'	285.45'	48"

NOTES:

1. NORTHING AND EASTING ARE TO CENTER OF THE CATCH BASIN OR MANHOLE.
2. SET GRATE AT FINISH GRADE.

C-501/102 DRAINAGE STRUCTURES TABLE

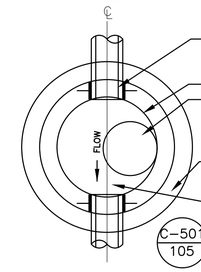

C-501/105 STORM SEWER MANHOLE PLAN
NOT TO SCALE

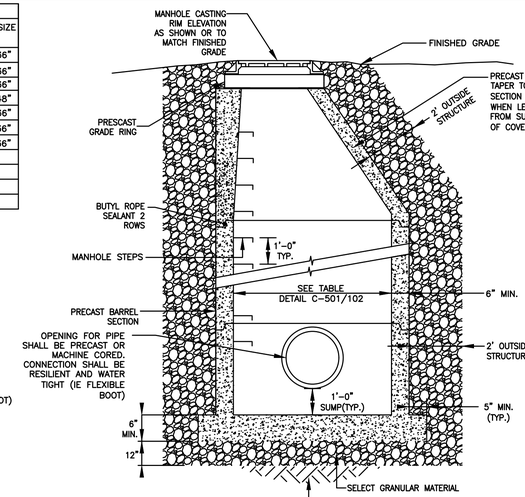

NOTE:
1. ENTIRE STRUCTURE SHALL BE ENTIRELY BACKFILLED WITH SELECT GRANULAR MATERIAL.

C-501/106 STORM MANHOLE DETAIL
NOT TO SCALE

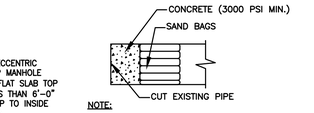

NOTE:
1. UPON COMPLETION, VIDEO INSPECTION OF THE PIPE BEING PLUGGED IS REQUIRED.

C500/107 PLUG EXISTING PIPE
NOT TO SCALE

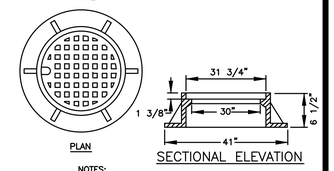

NOTES:

1. COVER SHALL BE NON-ROCKING TYPE.(MACHINE BEARING SURFACE)
2. CASTINGS SHALL BE NEENAH R-1557
3. STORM CASTING SHALL HAVE LABEL "STORM".
4. SANITARY CASTING SHALL HAVE LABEL "SANITARY".

C-501/108 MANHOLE FRAME AND COVER
NOT TO SCALE

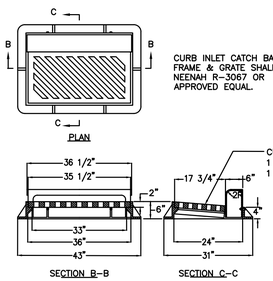

CURB INLET CATCH BASIN FRAME & GRATE SHALL BE NEENAH R-3067 OR APPROVED EQUAL.

CURB BOX ADJUSTABLE 6" TO 9" 1 3/8" DIAG. BARS WITH 1 1/4" OPENINGS

NOTE; FRAME MUST BE STAMPED "NO DUMPING DRAINS TO RIVER"

C-501/101 CURB INLET FRAME AND GRATE
NOT TO SCALE

TABLE OF SANITARY STRUCTURES				
STRUCTURE NUMBER	NORTHING	EASTING	ELEVATION	SIZE
PMH-1	982712.4875'	679557.2509'	302.41'	60"
VMH-1	982712.4940'	679547.2510'	303.91'	60"
PMH-2	982455.7780'	680240.9352'	296.14'	36"
FMR-1	982712.3427'	679630.9074'	302.69'	48"

C-501/103 TABLE OF SANITARY STRUCTURES

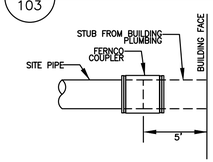

C-501/104 TYPICAL STORM AND SANITARY BUILDING CONNECTION
NOT TO SCALE

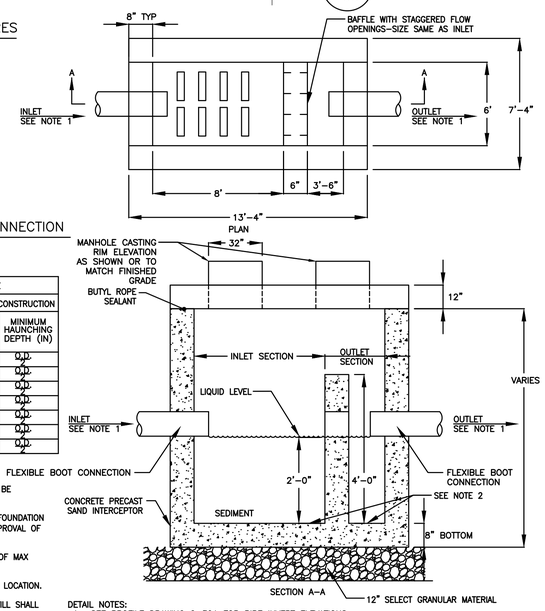

DETAIL NOTES:
1. SEE PROFILE DRAWING C-301 FOR PIPE INVERT ELEVATIONS
2. PROVIDE BITUMINOUS WATERPROOFING- TWO COATS ON ALL SIDES AND BOTTOM

INTERCEPTOR: PRECAST CONCRETE, MONOLITHIC, SAND INTERCEPTOR. DESIGN FOR EXTRA HEAVY DUTY TRAFFIC LOAD, WITH DUCTILE IRON DRAINAGE GRADE, SOLID ACCESSIBLE COVER AND FRAME

C-501/111 2000 GALLON SAND SEPARATOR
NOT TO SCALE

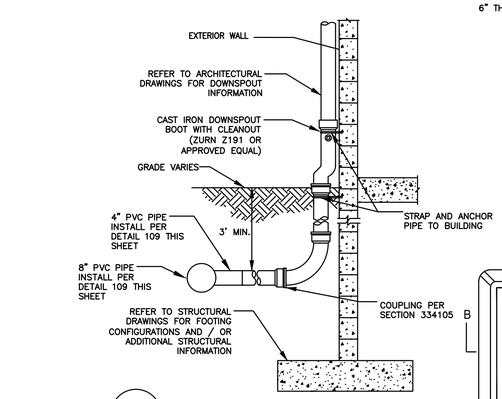

C-501/112 EXTERIOR STORM DOWN SPOUT DETAIL
NOT TO SCALE

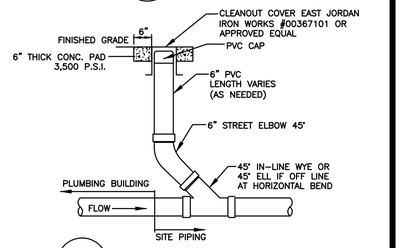

C-501/113 GRAVITY SEWER CLEANOUT DETAIL
NOT TO SCALE

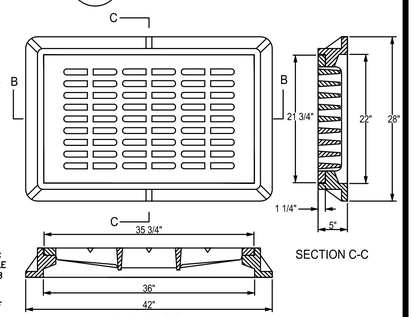

NOTE:
1. FRAME AND GRATE SHALL BE EAST JORDAN IRON WORKS 44067231C01 (BICYCLE SAFE) OR APPROVED EQUAL.
2. FRAME MUST BE STAMPED WITH "NO DUMPING DRAINS TO RIVER"

C-501/115 STORM SEWER FIELD INLET DETAIL
NOT TO SCALE

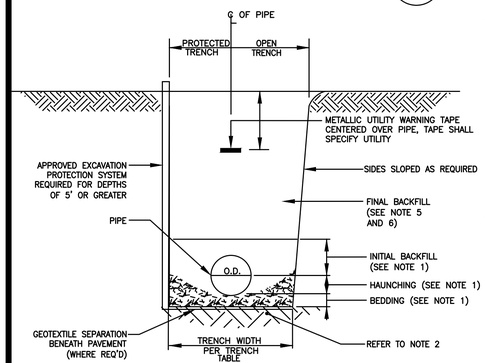

STORM/SANITARY SEWER TRENCH TABLE					
TRENCH EXCAVATION STORM/SANITARY AND BACKFILL ENVELOPE CONSTRUCTION					
PIPE DIAMETER (IN.)	MINIMUM TRENCH WIDTH (IN.)	MINIMUM BEDDING DEPTH (IN.)	MINIMUM INITIAL BACKFILL DEPTH (IN.)	MINIMUM FINAL BACKFILL DEPTH (IN.)	MINIMUM HAUNCHING DEPTH (IN)
1"-8"	O.D. + 48"	6"	O.D. + 12"	12"	O.D.
12"	O.D. + 48"	6"	O.D. + 12"	12"	O.D.
15"	O.D. + 48"	9"	O.D. + 12"	12"	O.D.
18"	O.D. + 48"	10"	O.D. + 12"	12"	O.D.
24"	O.D. + 48"	12"	O.D. + 12"	12"	O.D.
30"	O.D. + 60"	12"	O.D. + 12"	12"	O.D.
36"	O.D. + 60"	12"	O.D. + 12"	12"	O.D.

NOTES:

1. BEDDING, HAUNCHING AND INITIAL BACKFILL MATERIAL SHALL BE CUSHION MATERIAL.
2. IN UNSUITABLE MATERIAL OR ROCK, PROVIDE BEDDING AND FOUNDATION AT LEAST 6"DEEP BELOW NORMAL BEDDING AND TO THE APPROVAL OF THE DIRECTORS REPRESENTATIVE.
3. BACKFILL ENVELOPE COMPACTION REQUIREMENTS: 95% MIN. OF MAX MODIFIED PROCTOR DENSITY.
4. SURFACE TREATMENT TO BE PER REQUIREMENTS OF TRENCH LOCATION.
5. UNDER PAVEMENT AND WALKWAY SECTIONS THE FINAL BACKFILL SHALL BE SELECT GRANULAR MATERIAL.
6. IN GRASS AREAS, FINAL BACKFILL SHALL BE SUITABLE MATERIAL.

C-501/109 STORM AND SANITARY TRENCH DETAIL
NOT TO SCALE

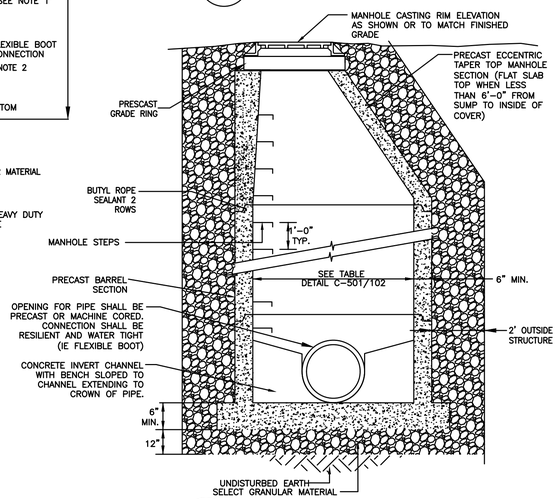

CONCRETE SLAB

NOTES:
1. STRUCTURE SHALL BE BACK-FILLED WITH SELECT GRANULAR MATERIAL.
2. EXCAVATION LIMITS SHALL BE 2' OUTSIDE OF THE STRUCTURE.
3. ANY MATERIALS EXCAVATED WITHIN THE FIRST 10 FEET FROM THE EXISTING GROUND SURFACE SHALL BE CONSIDERED UNSUITABLE AND SHALL BE REMOVED FORM THE SITE AS SURPLUS MATERIALS.

C-501/114 SANITARY MANHOLE DETAIL
NOT TO SCALE

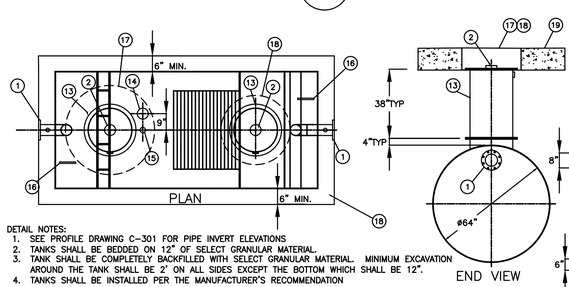

DETAIL NOTES:
1. SEE PROFILE DRAWING C-301 FOR PIPE INVERT ELEVATIONS
2. TANKS SHALL BE BEDDED ON 12" OF SELECT GRANULAR MATERIAL.
3. TANK SHALL BE COMPLETELY BACKFILLED WITH SELECT GRANULAR MATERIAL. MINIMUM EXCAVATION AROUND THE TANK SHALL BE 2' ON ALL SIDES EXCEPT THE BOTTOM WHICH SHALL BE 12".
4. TANKS SHALL BE INSTALLED PER THE MANUFACTURER'S RECOMMENDATION

C-501/110 2000 GALLON OIL WATER SEPARATOR HTC, HIGHGUARD SINGLE WALL
NOT TO SCALE

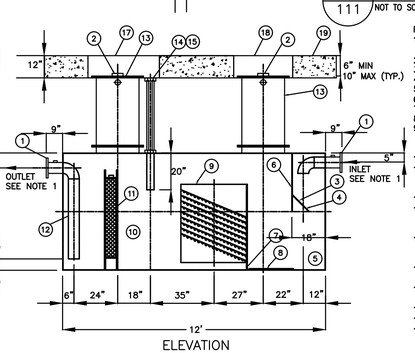

PROVIDED EQUIPMENT
1. 150# R.F.S.O. FLANGE W/ 2" FNPT FOR VENT
2. 4"ø FNPT FOR GAUGE WITH PLUG
3. VELOCITY HEAD DIFFUSION BAFFLE
4. WEAR PLATE
5. SEDIMENT CHAMBER
6. UNDERFLOW BAFFLE (REMOVABLE)
7. SLUDGE BAFFLE
8. STRIKER PLATES
9. PARALLEL CORRUGATED PLATE COALESCER. CORELLA PVC PLATES (3" PLATE SPACING)
10. OIL/WATER SEPARATOR CHAMBER
11. 6" THICK PETROSCREEN COALESCER MATERIAL INSTALLED W/ PULL ROD SHIPPED LOOSE
12. STEEL OUTLET DOWNCOMER
13. 24"ø MANWAY WITH NEO-CORK GASKETS. BOLT-ON EXTENSION SHIPPED LOOSE
14. 4"ø FNPT FOR OIL PUMP-OUT WITH INTERNAL PVC PIPE INSTALLED & RISER PIPE SHIPPED LOOSE
15. 2"ø FNPT FOR LEVEL SENSOR WITH RISER PIPE SHIPPED LOOSE
16. LIFTING LUG 17. 2"ø FNPT FOR VENT
17. 48" AT GRADE MANWAY COVER
18. 36" AT GRADE MANWAY COVER
19. 12" DEEP 4500 PSI REINFORCED CONCRETE PAD

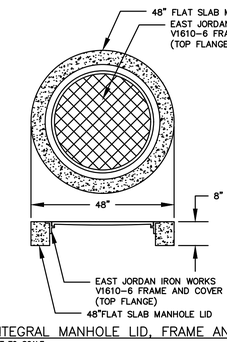

C-501/116 INTEGRAL MANHOLE LID, FRAME AND COVER
NOT TO SCALE

NEW YORK STATE OF OPPORTUNITY. Office of General Services
DESIGN & CONSTRUCTION

CONSULTANT:
SHUMAKER
Consulting Engineering & Land Surveying, D.P.C.

WARNING:
THE ALTERATION OF THIS MATERIAL IN ANY WAY, UNLESS DONE UNDER THE DIRECTION OF A COMPARABLE PROFESSIONAL, I.E. ARCHITECT FOR AN ARCHITECT, ENGINEER FOR AN ENGINEER OR LANDSCAPE ARCHITECT FOR A LANDSCAPE ARCHITECT, IS A VIOLATION OF THE NEW YORK STATE EDUCATION LAW AND/OR REGULATIONS AND IS A CLASS 'A' MISDEMEANOR.

STATE OF NEW YORK · JAMES M. CUMMINGS · 080958 · LICENSED PROFESSIONAL ENGINEER

CONTRACT:
CONSTRUCTION

TITLE:
PROVIDE SUB-HEADQUARTERS BUILDING

LOCATION:
DOT REGION 8, DUTCHESS COUNTY
205 LIME KILN RD.
EAST FISHKILL,NEW YORK 12533

CLIENT:
NEW YORK STATE DEPARTMENT OF TRANSPORTATION

MARK	DATE	DESCRIPTION
	10/17/2019	BID DOCUMENTS

PROJECT NUMBER:	45552-C
DESIGNED BY:	EFN
DRAWN BY:	AWR
FIELD CHECK:	
APPROVED:	JMC

SHEET TITLE:
STORMWATER AND SANITARY DETAILS

DRAWING NUMBER:
C-501

36x24 PLOT SHEET

Mar 16,2020 – 1:10pm
E:\2017\17095-East Fishkill NYSDOT Site\Design\PLANS\17095_C501-C502_Storm_Sanitary_and_Stormwater_Management_Details.dwg

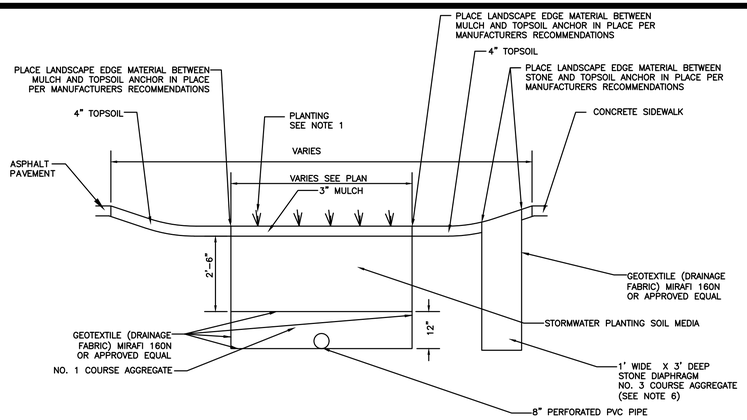

NOTES:
1. REFER BIORETENTION AREA PLANTING TABLES C-502/103 FOR PLANTINGS SCHEDULE.
2. PLANTING SOIL MEDIA SHALL MEET CRITERIA STATED IN THE NEW YORK STATE DEPARTMENT OF CONSERVATION STORM WATER DESIGN MANUAL, AND SECTION 329301 – PLANTS.
3. 8" PERFORATED PIPE SHALL HAVE A CLEANOUT ON END OPPOSITE OF CATCH BASIN AND AT EACH END OF UNDER DRAIN AS SHOWN ON PLANS AND DETAILS.
4. 8" PERFORATED PIPE SHALL BE INSTALLED INTO CATCH BASIN.
5. CATCH BASIN SHALL HAVE GRATE HIGHER THAN FINISH GRADE, REFER TO DRAWINGS C102 & C103 FOR GRADING.
6. DO NOT COMPACT COURSE AGGREGATE IN STONE DIAPHRAGM. STONE DIAPHRAGMS ARE USED AROUND BA#2 ONLY.

C-502 / 100 BIORETENTION AREA
NOT TO SCALE

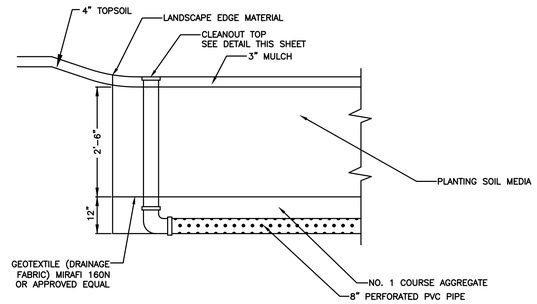

C-502 / 101 CLEANOUT DETAIL
NOT TO SCALE

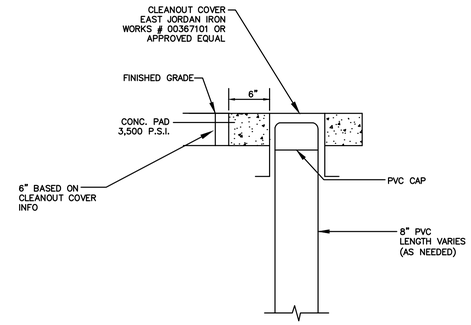

C-502 / 102 CLEANOUT TOP
NOT TO SCALE

BIORETENTION AREA TABLE		
BIORETENTION AREA	SIZE (SF) (LENGTH X WIDTH)	PRETREATMENT SIZE (SF) (LENGTH X WIDTH)
BA-1	483 (69' X 7')	N/A*
BA-2	4800 (100' X 48')	900 (20' X 45')

*PRETREATMENT IS PROVIDED BY STONE DIAPHRAGM AT PERIMETER

BA-1 PLANTING PLAN				
COMMON NAME	SCIENTIFIC NAME	SPACING	QTY	SIZE
SWITCH GRASS	PANICUM VIRGATUM	2 FT	80	PLUG
COMMON THREE SQUARE	SCIRPUS PUNGENS	2 FT	80	PLUG
BLUE FLAG IRIS	IRIS VERSICOLOR	2 FT	80	PLUG

BA-2 PLANTING PLAN				
COMMON NAME	SCIENTIFIC NAME	SPACING	QTY	SIZE
SWITCH GRASS	PANICUM VIRGATUM	2 FT	800	PLUG
COMMON THREE SQUARE	SCIRPUS PUNGENS	2 FT	800	PLUG
BLUE FLAG IRIS	IRIS VERSICOLOR	2 FT	800	PLUG

C-502 / 103 BIORETENTION AREA PLANTING TABLES
NOT TO SCALE

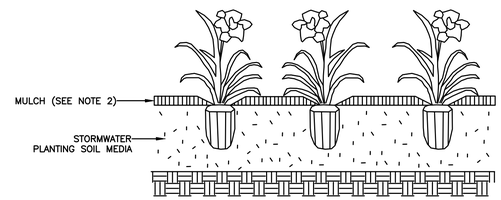

NOTES:
1. REPLACE ANY PLANT THAT IS DAMAGED DURING WORK OPERATIONS AT NO COST TO THE STATE.
2. MULCH SHALL BE A MAXIMUM OF 3" DEEP AND TAPERED DOWN TO LEAVE THE ROOT FLARE EXPOSED. WHEN PLANTING ON SLOPES, DOWNHILL SIDE MUST BE STABILIZED APPROPRIATELY OR SEEDING DOWNHILL SIDE MAY BE SPECIFIED.

C-502 / 104 BED PLANTING
NOT TO SCALE

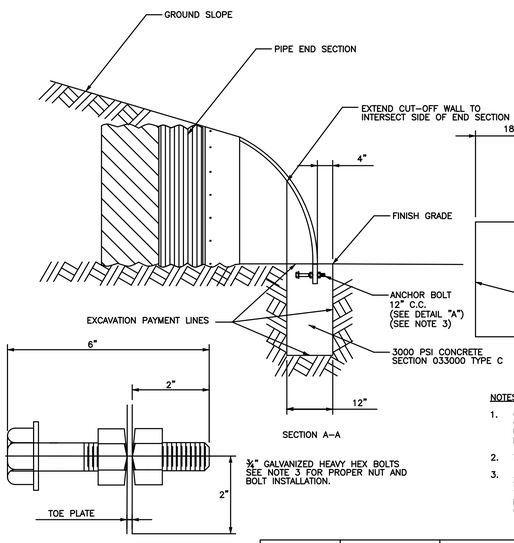

SECTION A–A

DETAIL A

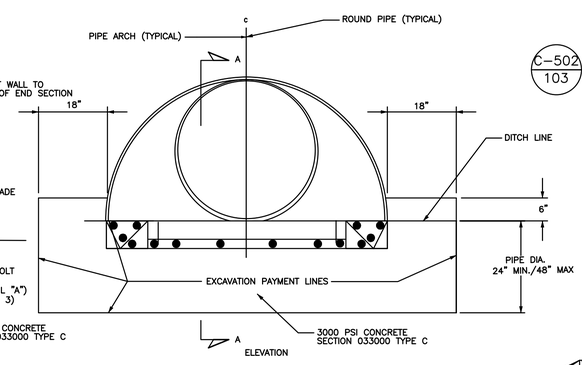

ELEVATION

NOTES:
1. CUT-OFF WALL SHALL BE CAST IN PLACE. THE PORTION OF THE CONCRETE CUTOFF WALL BELOW THE FINAL GRADE LINE SHALL BE CAST AGAINST UNDISTURBED SOIL IF FEASIBLE. THE CONCRETE CUT-OFF WALL SHALL BE POURED AFTER THE END SECTION IS INSTALLED.
2. VARIES BASED ON DIMENSIONS OF SPECIFIED END SECTION.
3. ANCHOR BOLTS SHALL MEET THE REQUIREMENTS OF NYSDOT STANDARD SPECIFICATION SECTION §707-20. THE NUTS AND BOLTS SHALL BE ASSEMBLED THAT IN THE FINAL ASSEMBLY, THE BOLT AND ONE OF THE NUTS IS EMBEDDED IN THE CONCRETE, THAT THE CHAMFERED FACES OF THE NUTS FACE EACH OTHER, AND SECURE THE TOE PLATE BETWEEN THEM.

STRUCTURE NO.	PIPE DIAMETER (INCHES)	END SECTION DIAMETER (INCHES)	END SECTION WIDTH (INCHES)	CUTOFF WALL WIDTH, W (INCHES)	CUTOFF WALL DEPTH, D (INCHES)
ES-1	24"	30"	84"	120"	24"
ES-2	8"	15"	44"	80"	24"
ES-3	6"	15"	44"	80"	24"
ES-4	12"	15"	44"	80"	24"
ES-5	12"	15"	44"	80"	24"
ES-6	12"	15"	44"	80"	24"

C-502 / 105 END SECTION AND CUTOFF WALL
NOT TO SCALE

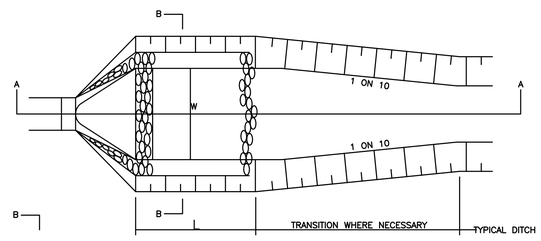

PLAN

TYPICAL TYPE 2 APRON FOR A CULVERT WITH AN END SECTION

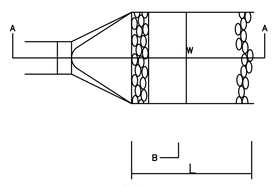

PLAN

TYPICAL TYPE 1 APRON FOR A CULVERT WITH AN END SECTION

APRON LINING	
ITEM	THICKNESS 'T'
LIGHT	18 "
MEDIUM	24 "

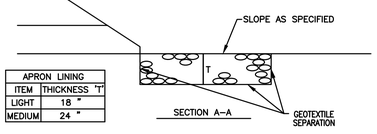

SECTION A–A

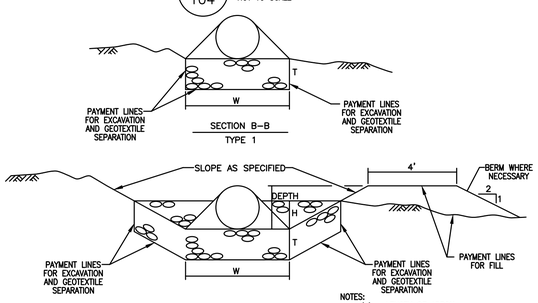

SECTION B–B
TYPE 1

SECTION B–B
TYPE 2

NOTE:
GEOTEXTILE BEDDING WILL BE ADDED TO LINE THE OUTLET OF STONE FILLED APRONS FOR A MAXIMUM DISTANCE OF 10 FEET.

NOTES:
1. 'L' = LENGTH OF APRON
2. 'W' = WIDTH OF APRON
3. 'T' = THICKNESS OF APRON LINING
4. 'H' = MAXIMUM HEIGHT OF APRON LINING
5. DUMPED STONE WILL BE PLACED IN SUCH A MANNER AS TO FORM AN IRREGULAR SURFACE.

APRON TABLE

NUMBER	LENGTH 'L' (IN)	WIDTH 'W' (IN)	LINING MATERIAL	TYPE	LINING HEIGHT 'H' (IN)	SIDE SLOPES
SA-1	96"	84"	MEDIUM	1	24"	N/A
SA-2	48"	44"	MEDIUM	1	12"	N/A
SA-3	48"	44"	MEDIUM	1	12"	N/A
SA-4	192"*	44"	MEDIUM	2	12"	1:2

* EXTEND SA-4 TO BOTTOM OF SLOPE

C-502 / 106 STONE APRON
NOT TO SCALE

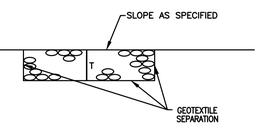

RIP RAP MIN. THICKNESS	
ITEM	THICKNESS 'T'
LIGHT	18 "
MEDIUM	24 "

C-502 / 107 STONE RIP RAP
NOT TO SCALE

NEW YORK STATE OF OPPORTUNITY. Office of General Services
DESIGN & CONSTRUCTION

CONSULTANT:
SHUMAKER Consulting Engineering & Land Surveying, D.P.C.

WARNING:
THE ALTERATION OF THIS MATERIAL IN ANY WAY, UNLESS DONE UNDER THE DIRECTION OF A COMPARABLE PROFESSIONAL, I.E. ARCHITECT FOR AN ARCHITECT, ENGINEER FOR AN ENGINEER OR LANDSCAPE ARCHITECT FOR A LANDSCAPE ARCHITECT, IS A VIOLATION OF THE NEW YORK STATE EDUCATION LAW AND/OR REGULATIONS AND IS A CLASS 'A' MISDEMEANOR.

STATE OF NEW YORK · JAMES M. CUMMINGS · 080958 · LICENSED PROFESSIONAL ENGINEER

CONTRACT:
CONSTRUCTION

TITLE:
PROVIDE SUB-HEADQUARTERS BUILDING

LOCATION:
DOT REGION 8, DUTCHESS COUNTY
205 LIME KILN RD.
EAST FISHKILL,NEW YORK 12533

CLIENT:
NEW YORK STATE DEPARTMENT OF TRANSPORTATION

MARK	DATE	DESCRIPTION
	10/17/2019	BID DOCUMENTS

PROJECT NUMBER:	45552-C
DESIGNED BY:	EFN
DRAWN BY:	AWR
FIELD CHECK:	
APPROVED:	JMC

SHEET TITLE:
STORMWATER MANAGEMENT DETAILS

DRAWING NUMBER:
C-502

Mar 16,2020 – 1:10pm
E:\2017\17095-East Fishkill NYSDOT Site\Design\PLANS\17095_C501-C502_Storm_Sanitary_and_Stormwater_Management_Details.dwg
36x24 PLOT SHEET

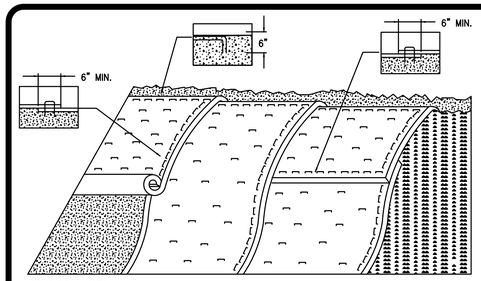

APPLICATION NOTES:

A. THE PURPOSE OF EROSION MATTING ON SLOPES IS TO REDUCE EROSION AND AID THE ESTABLISHMENT OF VEGETATION.
B. EROSION CONTROL MATTING SHALL BE USED FOR THE FOLLOWING REASONS:
* SLOPES GREATER THAN 3H:1V, WHERE SHOWN ON THE PLANS, OR WHERE ORDERED BY DIRECTOR'S REPRESENTATIVE.
* AREAS WHERE SEED AND MULCH WILL NOT STAY IN PLACE ALONE.
* WHERE SEEDING IS OUTSIDE THE GROWING SEASON.

GENERAL NOTES:

1. GRADE AND SMOOTH THE SLOPE TO PROVIDE GOOD MATTING TO SOIL SURFACE CONTACT.
2. APPLY FERTILIZER, LIME, AND SEED PRIOR TO PLACING MATTING.
3. ANCHOR MATTING AS SHOWN, UTILIZING ANCHOR STAPLES. STAPLE PLACEMENT SHALL BE DETERMINED BY THE MANUFACTURER'S INSTALLATION INSTRUCTIONS. ANCHOR LEADING AND TRAILING EDGES AS SHOWN ON THE MANUFACTURERS INSTALLATION INSTRUCTIONS.
4. UNROLL EROSION MATTING VERTICALLY DOWN SLOPE IN THE DIRECTION OF WATER FLOW.
5. OVERLAP UPPER MATTING OVER LOWER MATTING AS SHOWN, AND AS DIRECTED BY MANUFACTURER.
6. OVERLAP ADJACENT MATTING AS SHOWN, AND AS DIRECTED BY MANUFACTURER.
7. CUT EXCESS MATTING AT END OF SLOPE AND ANCHOR THE END.
8. EROSION MATTING SHALL BE INSPECTED EVERY SEVEN (7) CALENDAR DAYS AND WITHIN 24 HOURS OF A STORM EVENT OF ½" OR GREATER.
9. EROSION MATTING SHALL BE REPAIRED AND RESTAPLED AS NECESSARY TO ENSURE PROPER FUNCTION.

C-503 / 100 ROLLED EROSION CONTROL MAT
NOT TO SCALE

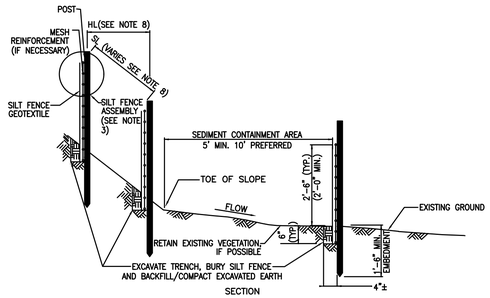

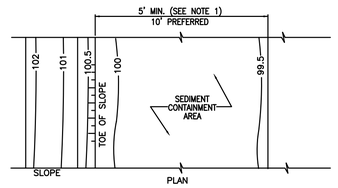

NOTES:

1. SILT FENCE SHALL BE PLACED A MINIMUM OF 5' FROM TOE TO SLOPE, 10' PREFERRED, TO PROVIDE ADEQUATE AREA FOR SEDIMENT STORAGE AND FACILITATE MAINTENANCE OF SEDIMENT CONTAINMENT AREA.
2. POSTS MAY BE 1 1/4" X 1 1/4" (MINIMUM) HARDWOOD, 1 1/2" X 3 1/2" (MINIMUM) SOFTWOOD, OR 1.34LB/FT (MIN.) STEEL.
3. ASSEMBLIES MAY HAVE 4' OR 6.5' POST SPACING. MESH IS NECESSARY ON FENCES WITH 6.5' SPACING AND ALL FENCE PLACED AT THE BOTTOM OF A 2:1, 3:1 (H:V) SLOPE.
4. THE BOTTOM EDGE OF SILT FENCE SHALL BE BURIED A MINIMUM OF 6" BELOW GROUND. THE FENCE SHALL BE INSTALLED WITH THE POSTS ON THE DOWNSTREAM SIDE OF THE FABRIC.
5. SILT FENCE SHALL BE INSPECTED EVERY SEVEN (7) CALENDAR DAYS, AFTER EACH RAINFALL OF 1/2" OR MORE WITHIN A 12 HOUR PERIOD, OR DAILY DURING PROLONGED RAINFALL. SILT FENCE SHALL BE CLEANED AND REPAIRED AS REQUIRED.
6. SEDIMENT SHALL BE REMOVED WHEN ACCUMULATION REACHES ONE-HALF OF THE SILT FENCE HEIGHT. SEDIMENT SHALL BE DISPOSED OF AS UNSUITABLE MATERIAL.
7. DRAINAGE AREAS:
MAXIMUM DRAINAGE AREA TRIBUTARY TO 100' OF SILT FENCE SHALL BE 1/2 ACRE.
8. THE FOLLOWING ARE MAXIMUM SLOPE LENGTHS TO THESE MEASURES:

SLOPE	SILT FENCE SLOPE LENGTH L (FT)	HORIZ LENGTH L (FT)
2:1	50	42
3:1	80	79
4:1	130	128
5:1	200	200
>5:1	260	260

C-503 / 101 SILT FENCE
NOT TO SCALE

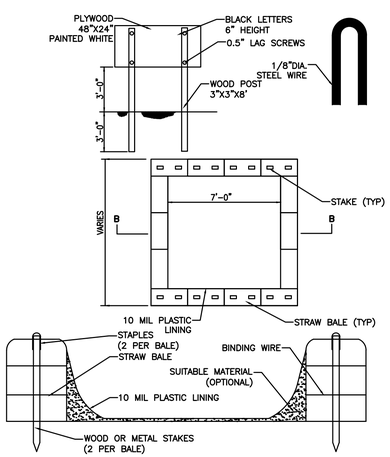

NOTES:

1. ACTUAL LAYOUT DETERMINED IN FIELD.
2. THE CONCRETE WASHOUT SIGN SHALL BE INSTALLED WITHIN 5-FEET OF THE TEMPORARY CONCRETE WASHOUT FACILITY.
3. LOCATE WASHOUT AREA AT LEAST 50-FEET FROM STORM DRAINS, OPEN DITCHES, OR WATER BODIES. DO NOT ALLOW RUNOFF FROM THIS AREA BY CONSTRUCTING A TEMPORARY PIT OR BERMED AREA LARGE ENOUGH FOR LIQUID AND SOLID WASTE.
4. WASH OUT WASTES INTO THE TEMPORARY PIT WHERE THE CONCRETE CAN SET, BE BROKEN UP, AND THEN DISPOSED PROPERLY.
5. TEMPORARY CONCRETE WASHOUT FACILITY (TYPE ABOVE GRADE) SHOULD BE CONSTRUCTED AS SHOWN ON THE DETAILS WITH A RECOMMENDED MINIMUM LENGTH AND MINIMUM WIDTH OF 10-FEET, BUT WITH SUFFICIENT QUANTITY AND VOLUME TO CONTAIN ALL LIQUID AND CONCRETE WASTE GENERATED BY WASHOUT OPERATIONS.
6. STRAW BALES, WOOD STAKES, AND SANDBAG MATERIALS SHOULD CONFORM TO THE PROVISIONS IN THE EROSION AND SEDIMENT CONTROL SPECIFICATION.
7. PLASTIC LINING MATERIAL SHOULD BE A MINIMUM OF 10 MIL IN POLYETHYLENE SHEETING AND SHOULD BE FREE OF HOLES, TEARS, OR OTHER DEFECTS THAT COMPROMISE THE IMPERMEABILITY OF THE MATERIAL.
8. WHEN TEMPORARY CONCRETE WASHOUT FACILITIES ARE NO LONGER REQUIRED FOR THE WORK, THE HARDENED CONCRETE SHOULD BE REMOVED AND DISPOSED OF. MATERIALS USED TO CONSTRUCT TEMPORARY CONCRETE WASHOUT FACILITIES SHOULD BE REMOVED FROM THE SITE OF THE WORK AND DISPOSED OF.
9. HOLES, DEPRESSIONS OR OTHER GROUND DISTURBANCE CAUSED BY THE REMOVAL OF THE TEMPORARY CONCRETE WASHOUT FACILITIES SHOULD BE BACKFILLED AND REPAIRED.
10. TEMPORARY CONCRETE WASHOUT FACILITIES SHOULD BE MAINTAINED TO PROVIDE ADEQUATE HOLDING CAPACITY WITH A MINIMUM FREEBOARD OF 4-INCHES. MAINTAINING TEMPORARY CONCRETE WASHOUT FACILITIES SHOULD INCLUDE REMOVING AND DISPOSING OF HARDENED CONCRETE AND RETURNING THE FACILITIES TO A FUNCTIONAL CONDITION. HARDENED CONCRETE MATERIALS SHOULD BE REMOVED AND DISPOSED OF.
11. WASHOUT FACILITIES MUST BE CLEANED,, OR NEW FACILITIES MUST BE CONSTRUCTED AND READY FOR USE ONCE THE WASHOUT IS 75% FULL.
12. ESTABLISH A CONCRETE WASHOUT ON THE SITE WHENEVER CONCRETE POURING OPERATIONS ARE TAKING PLACE.

C-503 / 102 CONCRETE WASHOUT
NOT TO SCALE

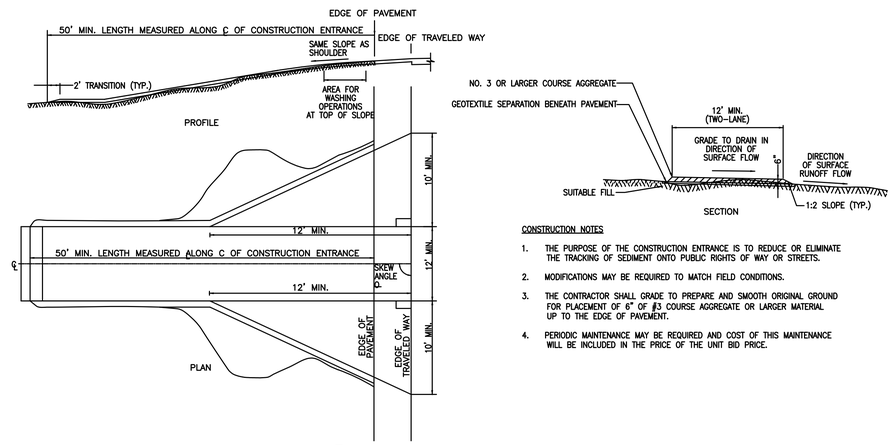

CONSTRUCTION NOTES

1. THE PURPOSE OF THE CONSTRUCTION ENTRANCE IS TO REDUCE OR ELIMINATE THE TRACKING OF SEDIMENT ONTO PUBLIC RIGHTS OF WAY OR STREETS.
2. MODIFICATIONS MAY BE REQUIRED TO MATCH FIELD CONDITIONS.
3. THE CONTRACTOR SHALL GRADE TO PREPARE AND SMOOTH ORIGINAL GROUND FOR PLACEMENT OF 6" OF #3 COURSE AGGREGATE OR LARGER MATERIAL UP TO THE EDGE OF PAVEMENT.
4. PERIODIC MAINTENANCE MAY BE REQUIRED AND COST OF THIS MAINTENANCE WILL BE INCLUDED IN THE PRICE OF THE UNIT BID PRICE.

C-503 / 103 TYPICAL CONSTRUCTION ENTRANCE
NOT TO SCALE

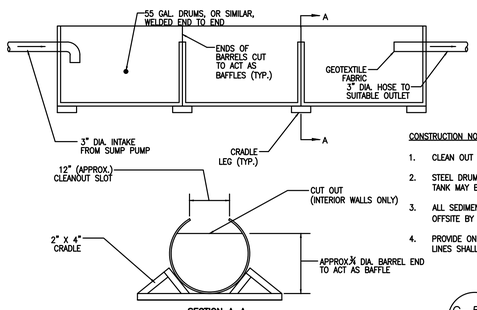

CONSTRUCTION NOTES

1. CLEAN OUT THE SEDIMENT TANK WHEN ONE THIRD (1/3) FILLED WITH SILT.
2. STEEL DRUMS ARE USED AS AN EXAMPLE DUE TO THEIR READY AVAILABILITY. ANY TANK MAY BE USED, PROVIDING THAT THE VOLUME REQUIREMENTS ARE MET.
3. ALL SEDIMENT COLLECTED IN THE TANK SHALL BE DISPOSED OF PROPERLY OFFSITE BY THE CONTRACTOR, OR AS APPROVED BY THE DIRECTOR'S REPRESENTATIVE.
4. PROVIDE ONE TANK FOR EACH 3 INCH PUMP DISCHARGE. PUMP DISCHARGE LINES SHALL NOT EXCEED 3 INCHES.

C-503 / 104 PORTABLE SEDIMENT TANK
NOT TO SCALE

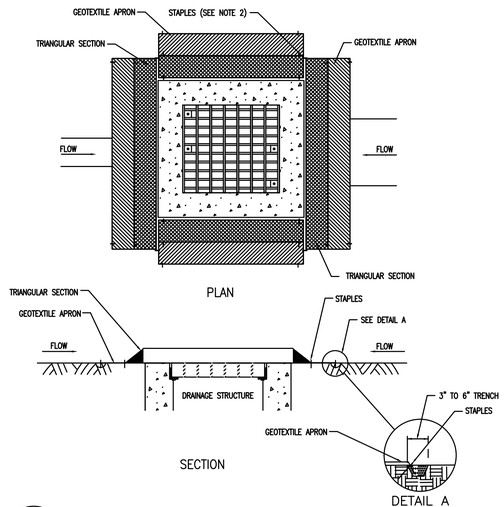

C-503 / 106 DRAINAGE STRUCTURE INLET PROTECTION- TEMPORARY (PREFABRICATED)
NOT TO SCALE

NOTES:

1. THE PRIMARY PURPOSE OF DRAINAGE STRUCTURE INLET PROTECTION IS TO PREVENT SEDIMENT FROM ENTERING A DRAINAGE SYSTEM BY PONDING WATER WHICH ALLOWS SEDIMENT TO FALL OUT OF SUSPENSION.
2. SECURE THE ENDS OF THE APRON WITH STAPLES AS DETAILED OR AS RECOMMENDED BY MANUFACTURER LITERATURE.
3. IF USED ON PAVEMENT, PLACE SANDBAGS OR CLEAN STONE ON APRON. (FULLY COVER APRON).
4. INLET PROTECTION SHALL BE INSPECTED EVERY SEVEN (7) CALENDAR DAYS, AFTER EACH RAINFALL OF ½" OR MORE WITHIN A 12 HOUR PERIOD, OR DAILY DURING PROLONGED RAINFALL. SILT FENCE INLET PROTECTION SHALL BE CLEANED AND REPAIRED AS REQUIRED.
5. SEDIMENT SHALL BE REMOVED WHEN ACCUMULATION REACHES ONE-HALF OF THE INLET PROTECTION HEIGHT. SEDIMENT SHALL BE DISPOSED OF AS UNSUITABLE MATERIAL.

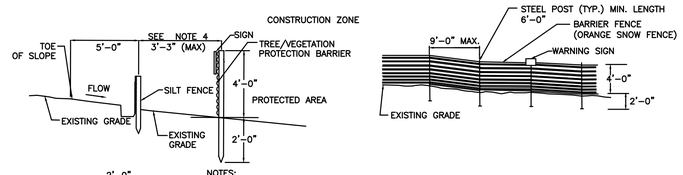

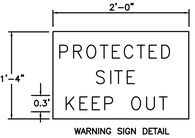

NOTES:

1. SEE SECTION 344113 FOR WARNING SIGN (SIZE, LETTERING AND MOUNTING INTERVALS).
2. SEE SECTION 344113 FOR PROPER ATTACHMENT TO POSTS AND OVERLAPPING.
3. TREE/VEGETATION PROTECTION BARRIER SHALL BE INSTALLED IN THE LOCATIONS SHOWN ON THE PLANS OR A.O.B.E. PRIOR TO BEGINNING ANY WORK IN THESE AREAS.
4. IN AREAS ADJACENT TO OR WITHIN A WETLAND THE DIRECTOR'S REPRESENTATIVE IN CHARGE MAY REQUIRE THE TREE/VEGETATION PROTECTION BARRIER TO BE PLACED IN COMBINATION WITH THE SILT FENCE.
5. THE DIRECTOR'S REPRESENTATIVE IN CHARGE MAY EXTEND THE DISTANCE BETWEEN THE TOE-OF-SLOPE AND SILT FENCE PROVIDING IT DOES NOT TAKE PLACE IN A WETLAND/WATERBODY AND DOES NOT REQUIRE THE REMOVAL OF EXISTING VEGETATION.

C-503 / 105 TEMPORARY PLASTIC BARRIER FENCE
NOT TO SCALE

NOTES:

1. AREA CHOSEN FOR STOCKPILING OPERATIONS SHALL BE DRY AND STABLE.
2. MAXIMUM SLOPE OF STOCKPILE SHALL BE 2:1.
3. UPON COMPLETION OF SOIL STOCKPILING, EACH PILE SHALL BE SURROUNDED WITH EITHER SILT FENCING OR STRAW BALES. THEN STABILIZED WITH VEGETATION OR COVERED.

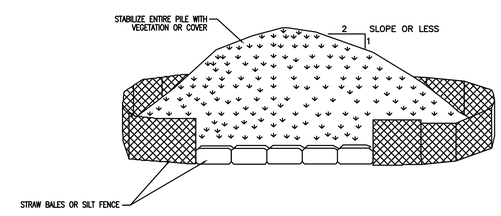

NOTE:
TO BE USED WHERE TOPSOIL IS NECESSARY FOR RE-GRADING AND VEGETATING DISTURBED AREAS. TEMPORARY STOCKPILE STABILIZATION MEASURES INCLUDE VEGETATIVE COVER, MULCH, NON-VEGETATIVE COVER, AND PERIPHERAL SEDIMENT TRAPPING BARRIERS, THE STABILIZATION MEASURE(S) SELECTED SHOULD BE APPROPRIATE FOR THE TIME OF THE YEAR, SITE CONDITIONS, AND REQUIRED PERIOD OF USE.

C-503 / 107 TEMPORARY SOIL STOCKPILE
NOT TO SCALE

NEW YORK STATE OF OPPORTUNITY. Office of General Services
DESIGN & CONSTRUCTION

CONSULTANT:
SHUMAKER Consulting Engineering & Land Surveying, D.P.C.

WARNING:
THE ALTERATION OF THIS MATERIAL IN ANY WAY, UNLESS DONE UNDER THE DIRECTION OF A COMPARABLE PROFESSIONAL, I.E. ARCHITECT FOR AN ARCHITECT, ENGINEER FOR AN ENGINEER OR LANDSCAPE ARCHITECT FOR A LANDSCAPE ARCHITECT, IS A VIOLATION OF THE NEW YORK STATE EDUCATION LAW AND/OR REGULATIONS AND IS A CLASS 'A' MISDEMEANOR.

STATE OF NEW YORK · JAMES M. CUMMINGS · 080958 · LICENSED PROFESSIONAL ENGINEER

CONTRACT:
CONSTRUCTION

TITLE:
PROVIDE SUB-HEADQUARTERS BUILDING

LOCATION:
DOT REGION 8, DUTCHESS COUNTY
205 LIME KILN RD.
EAST FISHKILL,NEW YORK 12533

CLIENT:
NEW YORK STATE DEPARTMENT OF TRANSPORTATION

MARK	DATE	DESCRIPTION
	10/17/2019	BID DOCUMENTS

PROJECT NUMBER:	45552-C
DESIGNED BY:	EFN
DRAWN BY:	AWR
FIELD CHECK:	
APPROVED:	JMC

SHEET TITLE:
EROSION AND SEDIMENT CONTROL/DRAINAGE DETAILS

DRAWING NUMBER:
C-503

Mar 16,2020 – 1:10pm
E:\2017\17095-East Fishkill NYSDOT Site\Design\PLANS\17095_C503_Drainage_Erosion_and_Sediment_Control_Details.dwg

36x24 PLOT SHEET

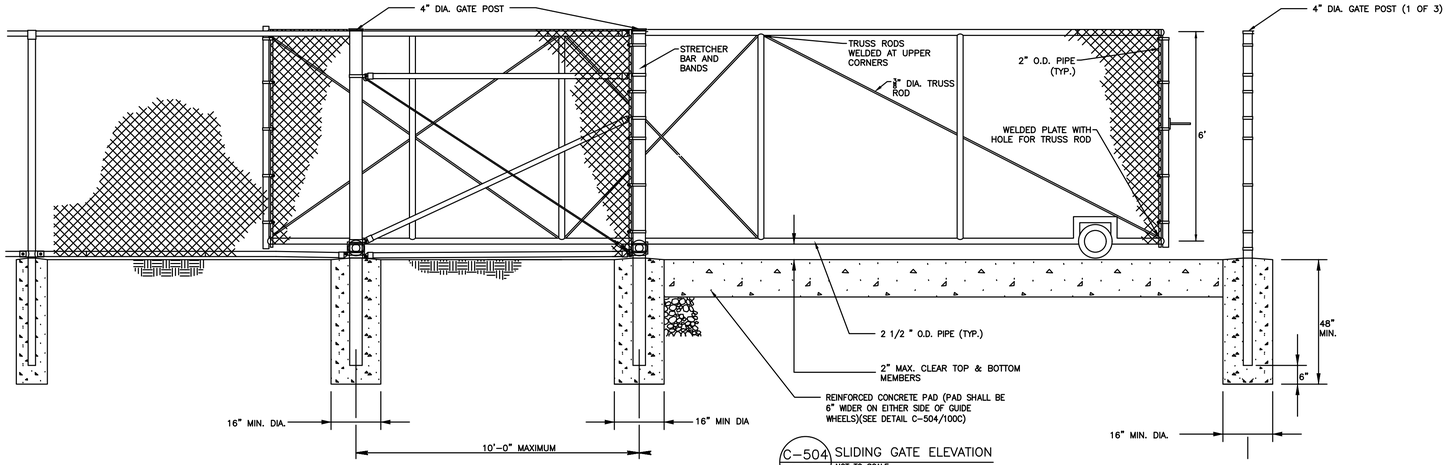

C-504 / 100A SLIDING GATE ELEVATION
NOT TO SCALE

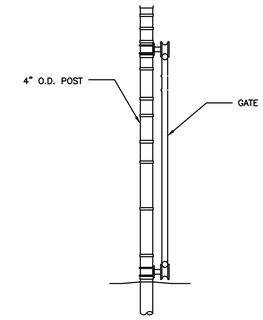

C-504 / 100B SLIDING GATE SECTION
NOT TO SCALE

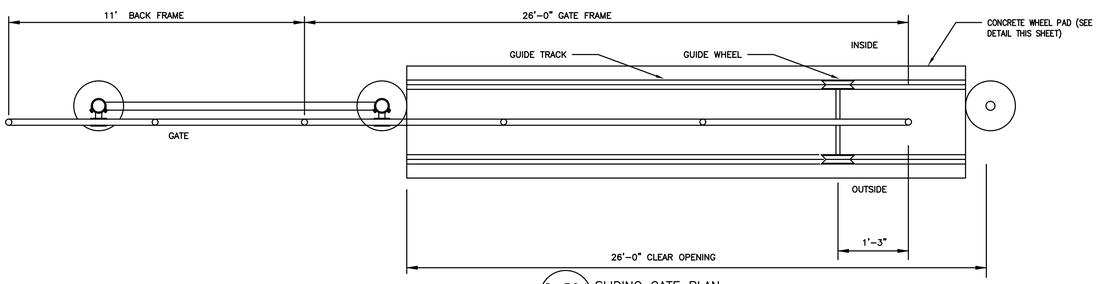

C-504 / 100C SLIDING GATE PLAN
NOT TO SCALE

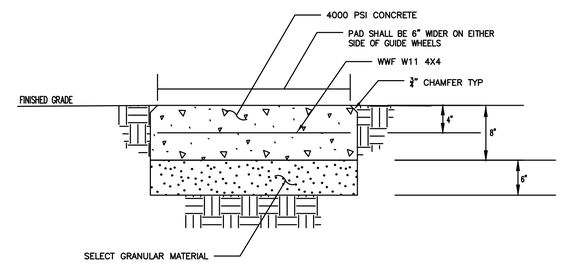

C-504 / 100D CONCRETE WHEEL PATH DETAIL
NOT TO SCALE

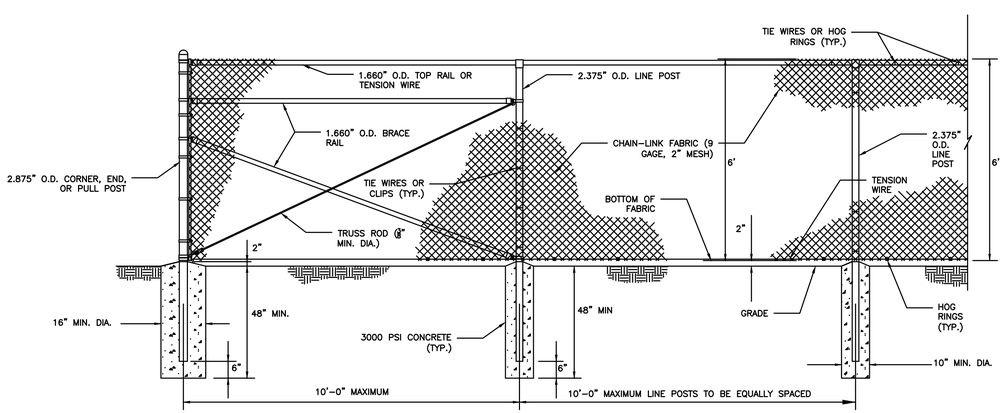

C-504 / 101 CHAIN LINK FENCE DETAIL
NOT TO SCALE

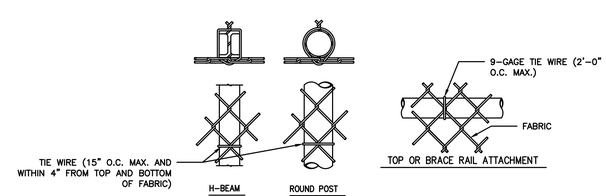

C-504 / 101A LINE POST ATTACHMENTS
NOT TO SCALE

NEW YORK STATE OF OPPORTUNITY. Office of General Services
DESIGN & CONSTRUCTION

CONSULTANT:
SHUMAKER Consulting Engineering & Land Surveying, D.P.C.

WARNING:
THE ALTERATION OF THIS MATERIAL IN ANY WAY, UNLESS DONE UNDER THE DIRECTION OF A COMPARABLE PROFESSIONAL, I.E. ARCHITECT FOR AN ARCHITECT, ENGINEER FOR AN ENGINEER OR LANDSCAPE ARCHITECT FOR A LANDSCAPE ARCHITECT, IS A VIOLATION OF THE NEW YORK STATE EDUCATION LAW AND/OR REGULATIONS AND IS A CLASS 'A' MISDEMEANOR.

STATE OF NEW YORK · JAMES M. CUMMINGS · 080958 · LICENSED PROFESSIONAL ENGINEER

CONTRACT:
CONSTRUCTION

TITLE:
PROVIDE SUB-HEADQUARTERS BUILDING

LOCATION:
DOT REGION 8, DUTCHESS COUNTY
205 LIME KILN RD.
EAST FISHKILL,NEW YORK 12533

CLIENT:
NEW YORK STATE DEPARTMENT OF TRANSPORTATION

MARK	DATE	DESCRIPTION
	10/17/2019	BID DOCUMENTS

PROJECT NUMBER:	45552-C
DESIGNED BY:	EFN
DRAWN BY:	AWR
FIELD CHECK:	
APPROVED:	JMC

SHEET TITLE:
FENCE DETAILS

DRAWING NUMBER:
C-504

Mar 16,2020 – 1:11pm
E:\2017\17095-East Fishkill NYSDOT Site\Design\PLANS\17095_C504_FENCE DETAILS.dwg
36x24 PLOT SHEET

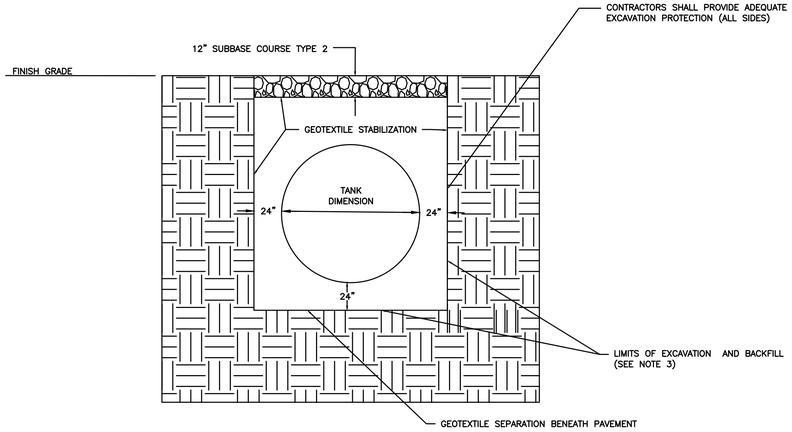

NOTES:
1. TANK DIAMETERS ARE NOMINAL SIZES. OTHER DIMENSIONS SHOWN ARE OUTSIDE OF THE TANK RIBS.
2. TANKS SHALL BE STORED AND INSTALLED PER THE MANUFACTURERS INSTRUCTIONS.
3. AREA UNDER, AROUND AND ABOVE TANKS SHALL BE BACKFILLED WITH BACKFILL MATERIAL THAT MEETS THE TANK MANUFACTURERS REQUIREMENTS IN MAX. 12" LIFTS. BACKFILL SHALL BE ENCASED IN GEOTEXTILE STABILIZATION.
4. CONTRACTOR SHALL SUBMIT FOR REVIEW AND APPROVAL TANK INSTALLATION PLAN.
5. CONTRACTOR SHALL MONITOR TANK DIAMETER AS STATED IN THE MANUFACTURERS' INSTALLATION INSTRUCTIONS. MEASUREMENTS SHALL BE TAKEN AT THE MIDPOINTS AND 14 FEET FROM EACH END OF EACH TANK. MEASUREMENTS SHALL BE TAKEN BEFORE BACKFILL IS STARTED, ONCE BACKFILLED TO THE SPRING LINE, WHEN BACKFILL REACHES 2.5 FEET ABOVE MIDPOINT OF TANK, WHEN BACKFILL REACHES THE TOP OF THE TANK, WHEN BACKFILL REACHES 2.5 FEET ABOVE THE TANK AND AT FINAL GRADE. CONTRACTOR SHALL RECORD MEASUREMENTS AND CHECK DEFLECTION IN ACCORDANCE WITH THE MANUFACTURER'S INSTRUCTIONS. CONTRACTOR SHALL SUBMIT MEASUREMENT LOG TO THE OWNER AND ENGINEER AFTER EACH SET OF MEASUREMENTS.
6. CONTRACTOR SHALL FULLY INSPECT THE INSIDE AND OUT AT THE TIME THEY RECEIVE THE TANK FROM THE MANUFACTURER AND BEFORE INSTALLATION. CONTRACTOR SHALL REPORT ANY DAMAGE OR ANY ISSUE TO THE OWNER AND ENGINEER.
7. CONTRACTOR SHALL PROTECT FROM DAMAGE ALL TANK CONNECTIONS DURING INSTALLATION.
8. ONCE BACKFILL HAS REACHED 8 FEET FOR THE FIRE PROTECTION TANK AND 6.4 FEET FOR THE POTABLE WATER TANK ALONG THE SIDE OF THE TANK (80% BACKFILLED) TEST THE TANK IN ACCORDANCE WITH THE MANUFACTURERS TESTING PROCEDURE. TEST DURATION SHALL BE 24 HOURS AFTER INITIAL WATER LEVEL HAS STABILIZED.
9. ALL PIPING CONNECTIONS TO THE TANK MUST BE FLEXIBLE TO ACCOMMODATE MOVEMENT BETWEEN THE PIPING AND TANK. USE EBAA IRON FLEX-TEND DOUBLE BALL FLEXIBLE EXPANSION JOINTS AT ALL PIPE CONNECTIONS.

C-505 / 100 TANK EXCAVATION SECTIONAL VIEW
NOT TO SCALE

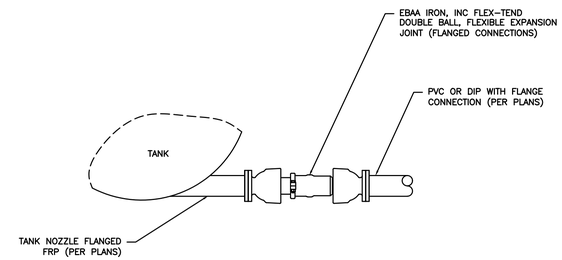

C-505 / 101 EXTERNAL TANK CONNECTIONS
NOT TO SCALE

NOTES:
1. PROVIDE AN EBAA IRON, INC FLEX-TEND DOUBLE BALL, FLEXIBLE EXPANSION JOINT WITH FLANGED CONNECTION ON ALL TANK CONNECTIONS. FLEXIBLE EXPANSION JOINTS SHALL ALLOW FOR 20" DEFLECTION AND 4" EXPANSION.
2. ALL COUPLINGS SHALL BE NSF61 CERTIFIED.
3. INSTALL ALL EXPANSION JOINTS AT NEUTRAL (0") DEFLECTION.
4. EXPANSION JOINTS SHALL BE ENCASED WITH POLYETHYLENE SLEEVES CONFORMING TO AWWA C105.

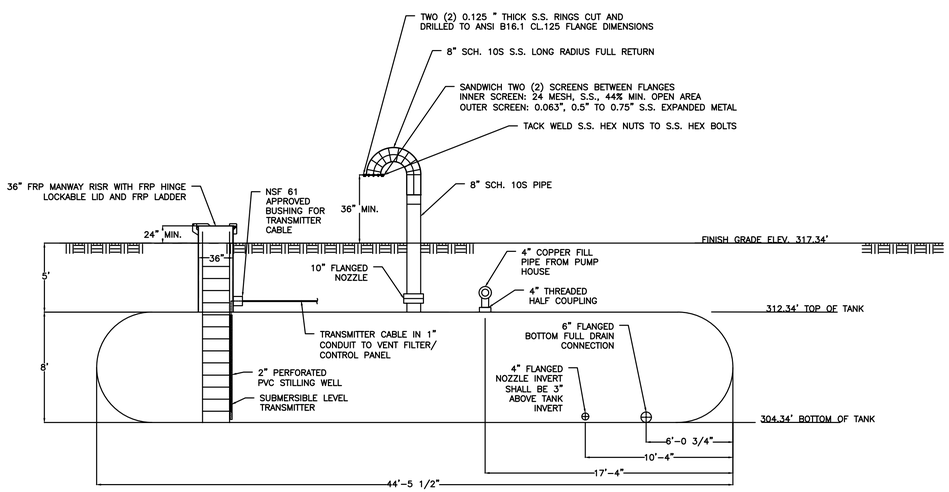

C-505 / 102 15,000 GALLON POTABLE WATER TANK CONNECTIONS SECTIONAL VIEW
SCALE: 1" = 5'

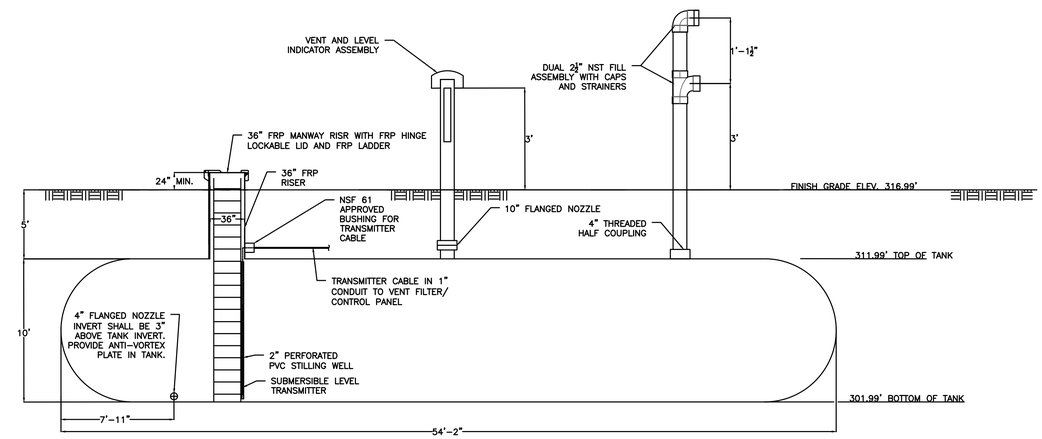

C-505 / 103 30,000 GALLON FIRE PROTECTION TANK CONNECTIONS SECTIONAL VIEW
SCALE: 1" = 5'

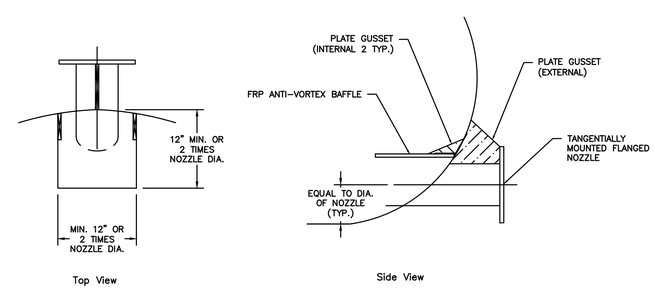

C-505 / 104 ANTI-VORTEX BAFFLE ASSEMBLY
NOT TO SCALE

NEW YORK STATE OF OPPORTUNITY. Office of General Services
DESIGN & CONSTRUCTION

CONSULTANT:
SHUMAKER Consulting Engineering & Land Surveying, D.P.C.

WARNING:
THE ALTERATION OF THIS MATERIAL IN ANY WAY, UNLESS DONE UNDER THE DIRECTION OF A COMPARABLE PROFESSIONAL, I.E. ARCHITECT FOR AN ARCHITECT, ENGINEER FOR AN ENGINEER OR LANDSCAPE ARCHITECT FOR A LANDSCAPE ARCHITECT, IS A VIOLATION OF THE NEW YORK STATE EDUCATION LAW AND/OR REGULATIONS AND IS A CLASS 'A' MISDEMEANOR.

STATE OF NEW YORK · JAMES M. CUMMINGS · 080958 · LICENSED PROFESSIONAL ENGINEER

CONTRACT:
CONSTRUCTION

TITLE:
PROVIDE SUB-HEADQUARTERS BUILDING

LOCATION:
DOT REGION 8, DUTCHESS COUNTY
205 LIME KILN RD.
EAST FISHKILL,NEW YORK 12533

CLIENT:
NEW YORK STATE DEPARTMENT OF TRANSPORTATION

MARK	DATE	DESCRIPTION
	10/17/2019	BID DOCUMENTS

PROJECT NUMBER:	45552-C
DESIGNED BY:	EFN
DRAWN BY:	AWR
FIELD CHECK:	
APPROVED:	JMC

SHEET TITLE:
WATER TANK DETAILS

DRAWING NUMBER:
C-505

36x24 PLOT SHEET

Mar 16,2020 – 1:11pm
E:\2017\17095--East Fishkill NYSDOT Site\Design\PLANS\17095_C505-C506-C507_Water_Tank_and_Underground_Storage_Structure_Details.dwg

BA-1 SECTION VIEW (A-A)

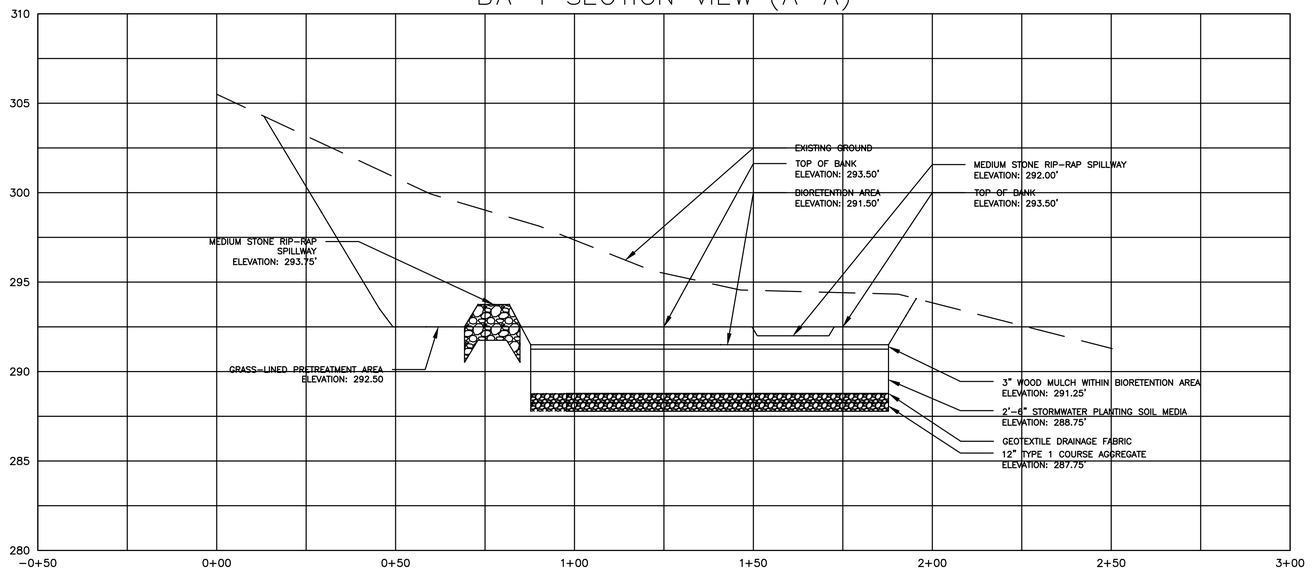

BA-1 CROSS SECTION (B-B)

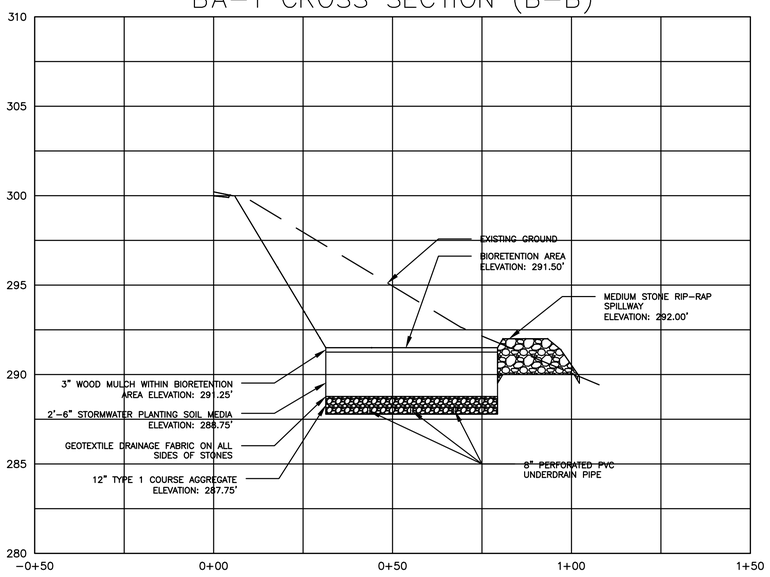

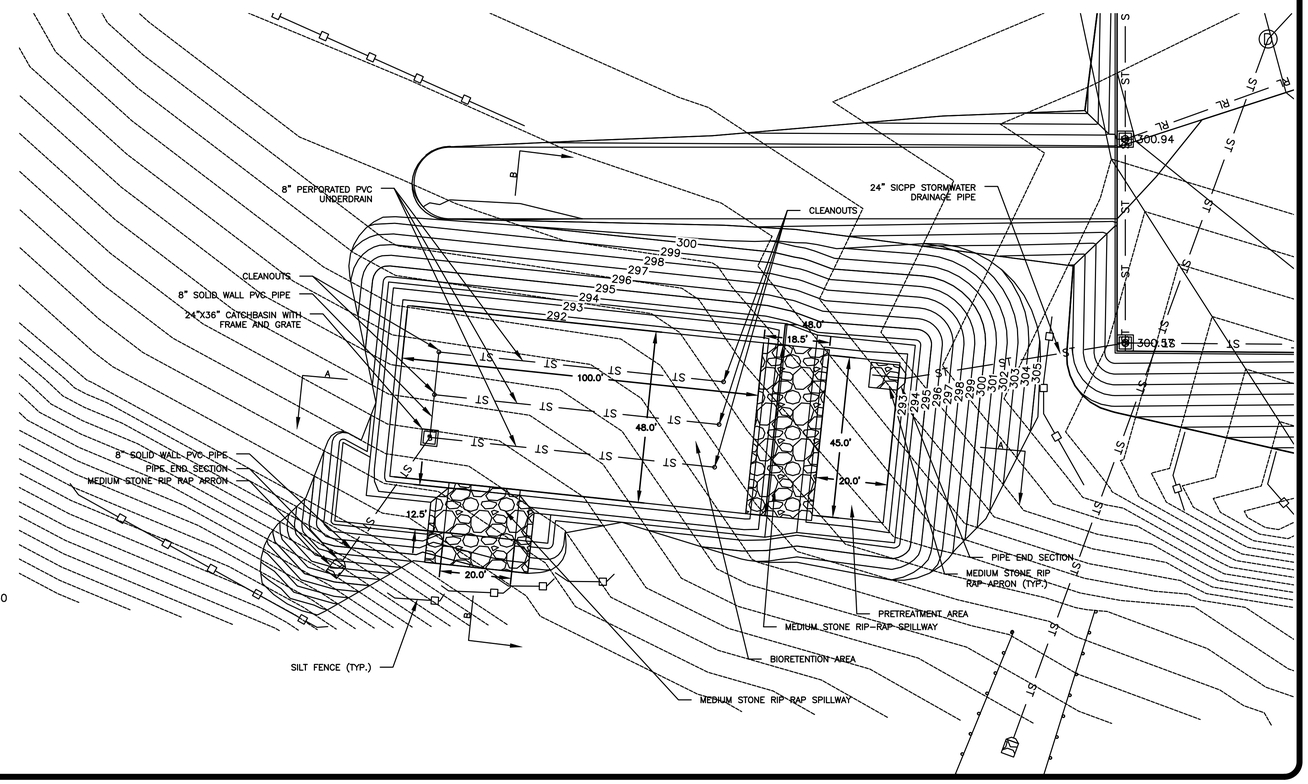

VERTICAL SCALE 0 4 8 FEET

HORIZONTAL SCALE 0 20 40 FEET

36x24 PLOT SHEET

Mar 16,2020 – 1:11pm
E:\2017\17095-East Fishkill NYSDOT Site\Design\PLANS\17095_C505-C506-C507_Water_Tank_and_Underground_Storage_Structure_Details.dwg

NEW YORK STATE OF OPPORTUNITY. Office of General Services

DESIGN & CONSTRUCTION

CONSULTANT:

SHUMAKER Consulting Engineering & Land Surveying, D.P.C.

WARNING:

THE ALTERATION OF THIS MATERIAL IN ANY WAY, UNLESS DONE UNDER THE DIRECTION OF A COMPARABLE PROFESSIONAL, I.E. ARCHITECT FOR AN ARCHITECT, ENGINEER FOR AN ENGINEER OR LANDSCAPE ARCHITECT FOR A LANDSCAPE ARCHITECT, IS A VIOLATION OF THE NEW YORK STATE EDUCATION LAW AND/OR REGULATIONS AND IS A CLASS 'A' MISDEMEANOR.

STATE OF NEW YORK · JAMES M. CUMMINGS · 080958 · LICENSED PROFESSIONAL ENGINEER

CONTRACT: CONSTRUCTION

TITLE: PROVIDE SUB-HEADQUARTERS BUILDING

LOCATION: DOT REGION 8, DUTCHESS COUNTY
205 LIME KILN RD.
EAST FISHKILL,NEW YORK 12533

CLIENT: NEW YORK STATE DEPARTMENT OF TRANSPORTATION

MARK	DATE	DESCRIPTION
	10/17/2019	BID DOCUMENTS

PROJECT NUMBER:	45552-C
DESIGNED BY:	EFN
DRAWN BY:	AWR
FIELD CHECK:	
APPROVED:	JMC

SHEET TITLE: BIORETENTION AREA 1 SECTION DETAILS

DRAWING NUMBER: C-506

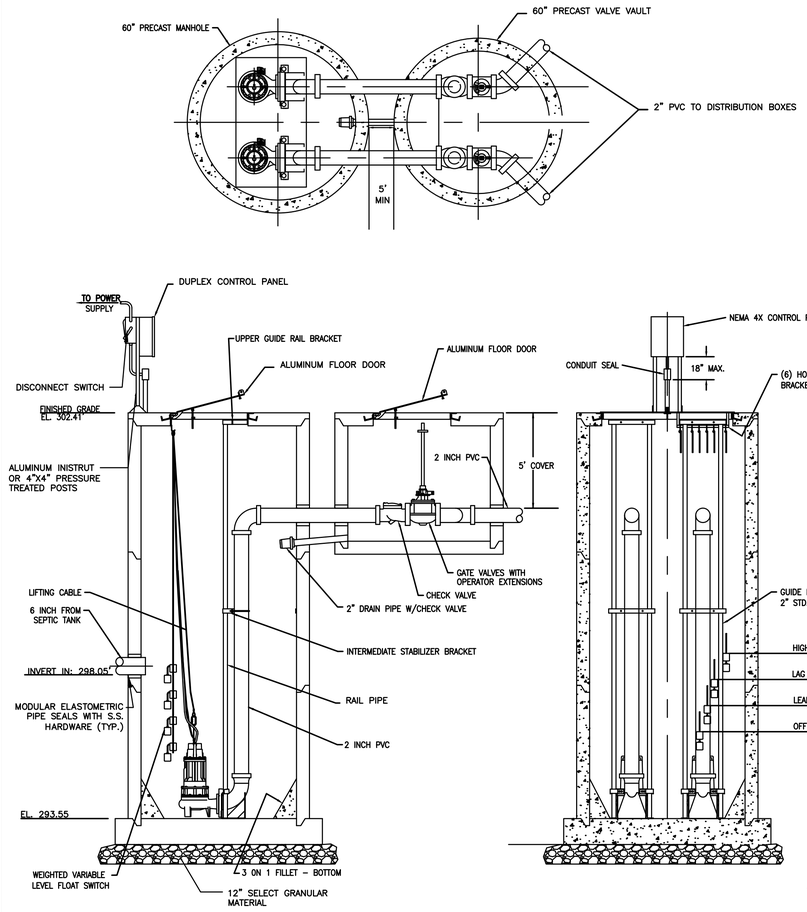

NOTE:
1. MINIMUM EXCAVATION LIMIT IS 2 FT OUTSIDE OF THE STRUCTURE, ENTIRE EXCAVATION TO BE BACKFILLED WITH SELECT GRANULAR MATERIAL.

C-507 / 100 SEPTIC EFFLUENT DOSING STATION DETAIL
NOT TO SCALE

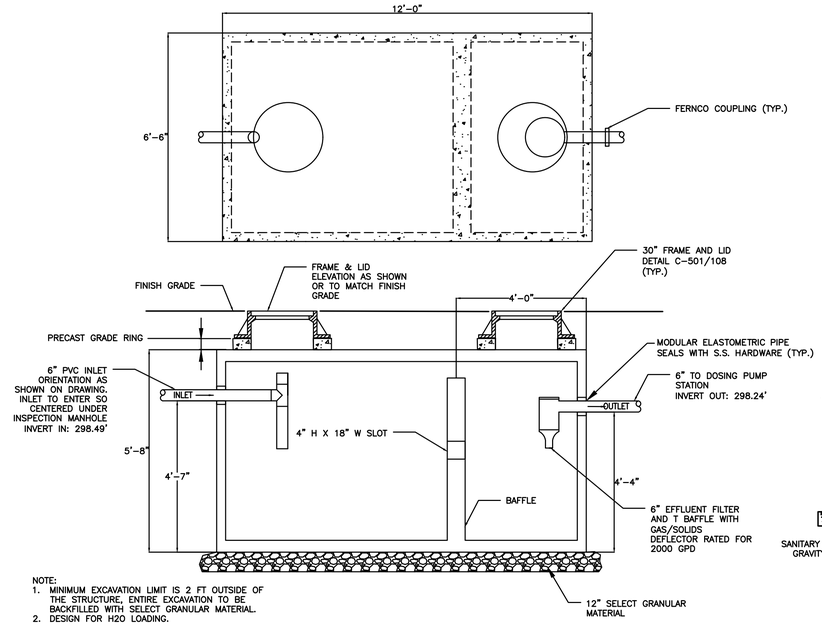

NOTE:
1. MINIMUM EXCAVATION LIMIT IS 2 FT OUTSIDE OF THE STRUCTURE, ENTIRE EXCAVATION TO BE BACKFILLED WITH SELECT GRANULAR MATERIAL.
2. DESIGN FOR H20 LOADING.

C-507 / 101 2000 GALLON SEPTIC TANK DETAIL
NOT TO SCALE

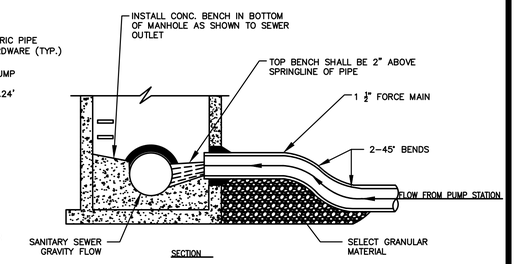

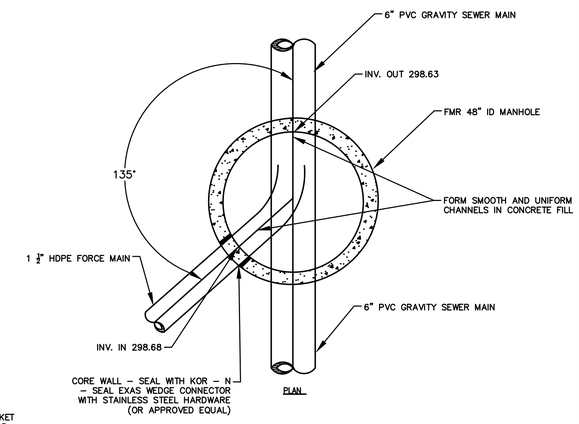

C-507 / 104 FORCE MAIN CONNECTION TO CONCRETE MANHOLE
NOT TO SCALE

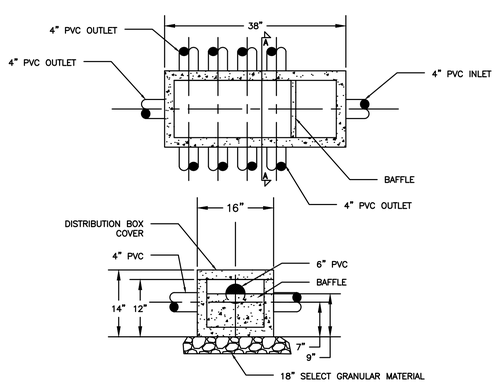

NOTES:
1. PROVIDE SEALS AND LIQUID LEVELERS AT ALL OUTLETS.

C-507 / 102 TYPICAL DISTRIBUTION BOX DETAIL
NOT TO SCALE

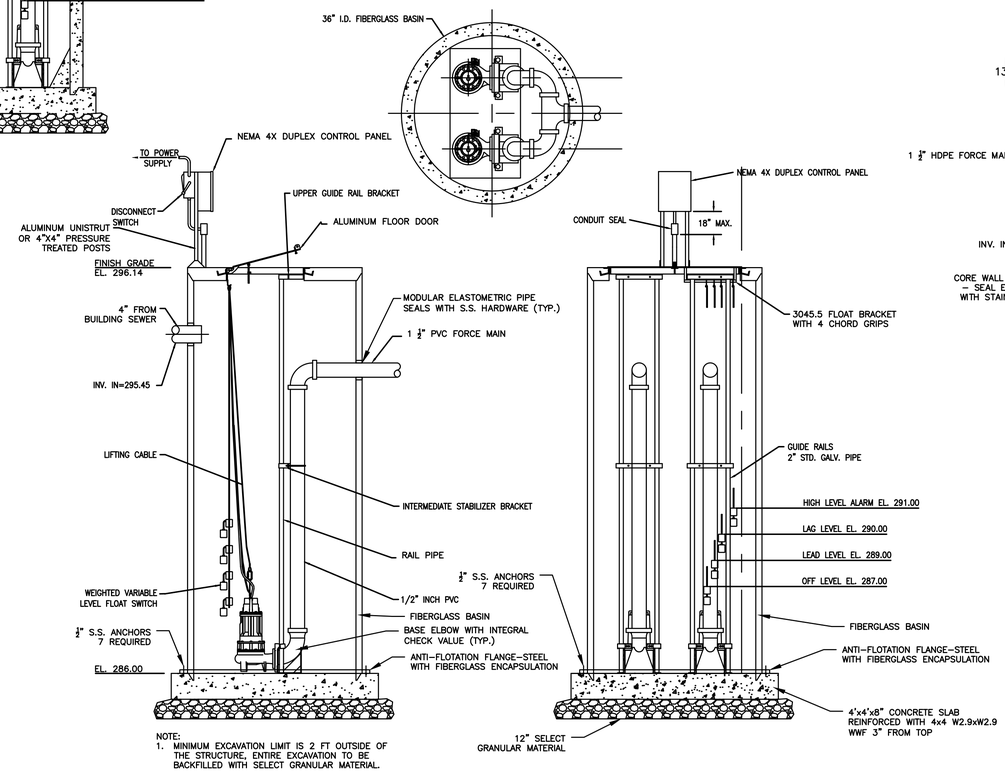

NOTE:
1. MINIMUM EXCAVATION LIMIT IS 2 FT OUTSIDE OF THE STRUCTURE, ENTIRE EXCAVATION TO BE BACKFILLED WITH SELECT GRANULAR MATERIAL.

C-507 / 103 GRINDER PUMP STATION DETAIL
NOT TO SCALE

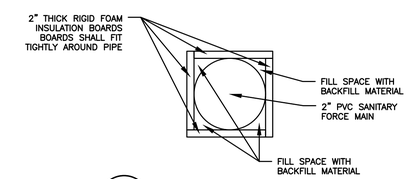

C-507 / 104 FORCE MAIN INSULATION DETAIL
NOT TO SCALE

NEW YORK STATE OF OPPORTUNITY. Office of General Services
DESIGN & CONSTRUCTION

CONSULTANT:
SHUMAKER Consulting Engineering & Land Surveying, D.P.C.

WARNING:
THE ALTERATION OF THIS MATERIAL IN ANY WAY, UNLESS DONE UNDER THE DIRECTION OF A COMPARABLE PROFESSIONAL, I.E. ARCHITECT FOR AN ARCHITECT, ENGINEER FOR AN ENGINEER OR LANDSCAPE ARCHITECT FOR A LANDSCAPE ARCHITECT, IS A VIOLATION OF THE NEW YORK STATE EDUCATION LAW AND/OR REGULATIONS AND IS A CLASS 'A' MISDEMEANOR.

STATE OF NEW YORK · JAMES M. CUMMINGS · 080958 · LICENSED PROFESSIONAL ENGINEER

CONTRACT:
CONSTRUCTION

TITLE:
PROVIDE SUB-HEADQUARTERS BUILDING

LOCATION:
DOT REGION 8, DUTCHESS COUNTY
205 LIME KILN RD.
EAST FISHKILL,NEW YORK 12533

CLIENT:
NEW YORK STATE DEPARTMENT OF TRANSPORTATION

MARK	DATE	DESCRIPTION
	10/17/2019	BID DOCUMENTS

PROJECT NUMBER:	45552-C
DESIGNED BY:	EFN
DRAWN BY:	AWR
FIELD CHECK:	
APPROVED:	JMC

SHEET TITLE:
SANITARY DETAILS

DRAWING NUMBER:
C-507

36x24 PLOT SHEET

Mar 16,2020 - 1:12pm
E:\2017\17095-East Fishkill NYSDOT Site\Design\PLANS\17095_C508-509_Pump_Station_Septic_Distribution_Box.dwg

GENERAL NOTES – SUBSURFACE TREATMENT SYSTEM

1. SYSTEM DESIGN AND CONSTRUCTION SHALL BE IN COMPLIANCE WITH N.Y.S.D.E.C. DESIGN STANDARDS FOR INTERMEDIATE SIZED WASTEWATER TREATMENT SYSTEMS.
2. NO ROOF, FOOTING, COOLING WATER, OR WATER SOFTENER BACKWASH WATER SHALL BE CONNECTED TO THE SYSTEM.
3. SYSTEM SHALL BE GRADED TO PROVIDE POSITIVE DRAINAGE AWAY FROM THE SYSTEM.
4. ANY CHANGE IN CONDITIONS MUST BE BROUGHT TO THE ATTENTION OF THE DIRECTOR'S REPRESENTATIVE.

SYSTEM DESIGN

SYSTEM DESIGN – CUT AND FILL SYSTEM

1. 30 EMPLOYEES X [15 GPD (FIXTURES) + 10 GPD (SHOWERS)] x 0.8 X 2 SHIFTS PER DAY = 1200 GPD. NOTE: THIS INCLUDES A 20 PERCENT REDUCTION OF THE PER–UNIT HYDRAULIC LOADING RATE FOR LOW FLOW FIXTURES.
2. PERCOLATION TESTING AT 24" DEPTH INDICATES HYDRAULIC CONDUCTIVITY OF > 60 MINUTES PER INCH (MPI).
3. DEEP HOLE TESTING INDICATES THE PRESENCE OF LESS COMPACTED SANDY AND SILT LOAM AT 36" DEPTH.
4. DESIGN SYSTEM BASED ON APPLICATION RATE OF 0.45 GPD/SQ.FT. FOR SILT LOAM.
5. REQUIRED LATERAL LENGTH = (1200 GPD / 0.45 GPD/SQ.FT.) X 1 LF/ 2 SQ.FT. = 1333 LF. USE EIGHTEEN (18) 75' LONG LATERALS.

CUT AND FILL SYSTEM CONSTRUCTION

1. ROPE OFF THE SITE TO PREVENT DAMAGE TO THE AREA DURING CONSTRUCTION ACTIVITY. VEHICULAR TRAFFIC OVER THE AREA IS PROHIBITED TO AVOID COMPACTION.
2. STAKE OUT THE SYSTEM IN THE PROPER ORIENTATION.
3. CUT AND REMOVE ANY VEGETATION AND TOPSOIL.
4. EXCAVATE AND REMOVE AT LEAST THREE (3) FEET OF EXISTING SOIL FOR THE FULL LENGTH AND WIDTH OF THE SYSTEM TAKING CARE NOT TO COMPACT THE SOIL BELOW THE SYSTEM.
5. AT LEAST TWO (2) 24" DEEP PERCOLATION TESTS SHALL BE PERFORMED BY A LICENSED ENGINEER RETAINED BY THE CONTRACTOR AFTER THE REMOVAL OF THE 3' OF EXISTING SOIL. TESTS SHALL BE SCHEDULED WITH THE REVIEWING ENGINEER OF THE AUTHORITY HAVING JURISDICTION SO THAT HE/SHE CAN WITNESS IF SO DESIRED. PERFORM ADDITIONAL TESTS IF SO DIRECTED BY THE REVIEWING ENGINEER. PERCOLATION RATE SHOULD BE LESS THAN 60 MPI. NOTIFY THE DIRECTOR'S REPRESENTATIVE IF RATE IS GREATER THAN 60 MPI.
6. PRIOR TO PLACING FILL, PLOW THE AREA WITHIN THE SYSTEM PERIMETER. USE A TWO BOTTOM OR LARGE MOLDBOARD PLOW, PLOWING 7–8 INCHES DEEP PARALLEL TO THE CONTOURS. SINGLE BOTTOM PLOWS SHALL NOT BE USED, AS THE TRACE WHEEL RUNS IN EVERY FURROW, COMPACTING THE SOIL. EACH FURROW SHOULD BE THROWN UPSLOPE. A CHISEL PLOW MAY BE USED IN PLACE OF A MOLDBOARD PLOW. ROTOTILLING IS NOT RECOMMENDED BECAUSE OF THE DAMAGE IT DOES TO THE SOIL STRUCTURE. HOWEVER, ROTOTILLING MAY BE USED IN GRANULAR SOILS, SUCH AS SANDS. PLOWING SHALL NOT BE DONE WHEN THE SOIL IS TOO WET AS SMEARING AND COMPACTION WILL OCCUR. IF A SAMPLE OF THE SOIL TAKEN FROM THE PLOW DEPTH FORMS A WIRE WHEN ROLLED BETWEEN THE PALMS, THE SOIL IS TOO WET. IF IT CRUMBLES, PLOWING MAY PROCEED, AS DIRECTED.

FILL PLACEMENT GENERAL REQUIREMENTS.

1. FILL SHALL BE FROM AN APPROVED SOURCE WITH A PERCOLATION RATE BETWEEN 5 – 30 MPI STABILIZED IN PLACE.
2. PLACE THE FILL ON THE UPSLOPE EDGES OF THE PLOWED AREA. KEEP TRUCKS OFF THE PLOWED AREA.
3. MOVE THE FILL INTO PLACE WITH A SMALL TRACK–TYPE TRACTOR WITH A BLADE. ALWAYS KEEP A MINIMUM OF 6–INCHES OF MATERIAL BENEATH THE TRACKS OF THE TRACTOR TO MINIMIZE COMPACTION OF THE SOIL.
4. THE STRUCTURE OF THE SOIL BENEATH THE SYSTEM SHALL BE PROTECTED FROM DAMAGE FROM TRUCKS OR MACHINERY THROUGHOUT THE CONSTRUCTION PROCESS. TRACK–MOUNTED EQUIPMENT SHALL BE USED TO PLACE AND COMPACT THE FILL.
5. A SLIGHT DRAINAGE SWALE SHALL BE CONSTRUCTED UPSLOPE OF THE SYSTEM TO PREVENT INFILTRATION OF THE SURFACE RUNOFF INTO THE SYSTEM.

STABILIZATION METHODS

1. FILL PLACEMENT AND COMPACTION SHALL BE WITNESSED BY THE DIRECTOR'S REPRESENTATIVE.
2. PLACE FILL IN LAYERS NOT MORE THAN 6 (6) INCHES THICK IN LOOSE DEPTH TO THE ELEVATIONS SHOWN. EACH LIFT SHALL BE PROOF–ROLLED AND COMPACTED WITH A SMOOTH DRUM VIBRATORY ROLLER THAT WEIGHS FIVE (5) TONS. THE ROLLER SHALL BE OPERATED IN ITS VIBRATORY MODE AND SHALL COMPLETE TWO (2) OVERLAPPING PASSES (FRONT AND BACK).
3. COARSE SANDS AND GRAVELS SHALL SETTLE TO AT LEAST 85 PERCENT OF THE STANDARD PROCTOR DENSITY. FINE SANDS, SILTY SAND, SANDY CLAY AND SANDY LOAM SHALL SETTLE TO AT LEAST 90 PERCENT OF THE STANDARD PROCTOR DENSITY.
4. AT LEAST TWO (2) 24" DEEP PERCOLATION TESTS SHALL BE PERFORMED WITHIN THE STABILIZED ABSORPTION FIELD BY A LICENSED ENGINEER RETAINED BY THE CONTRACTOR. TESTS SHALL BE SCHEDULED WITH THE REVIEWING ENGINEER OF THE AUTHORITY HAVING JURISDICTION SO THAT HE/SHE CAN WITNESS IF SO DESIRED. PERFORM ADDITIONAL TESTS IF SO DIRECTED BY THE REVIEWING ENGINEER. PERCOLATION RATE SHALL BE BETWEEN FIVE (5) AND SIXTY (60) MPI. NOTIFY THE DIRECTOR'S REPRESENTATIVE IF RATE IS NOT WITHIN THIS LIMIT.

ABSORPTION TRENCHES

1. CONSTRUCT ABSORPTION TRENCHES 18 TO 21 INCHES DEEP MEASURED FROM TOP OF FILL TO BOTTOM OF TRENCH, AND IN ACCORDANCE WITH THE DETAILS PRESENTED ON THIS DRAWING.

COVERING

1. PLACE 6 INCHES OF TOPSOIL OVER THE ENTIRE SYSTEM.
2. ENTIRE SYSTEM SHALL BE SEEDED AND MULCHED.

REQUIRED INSPECTIONS

1. INSPECTION #1: PERCOLATION TESTING OF NATIVE SOIL BELOW FILL: DIRECTOR'S REPRESENTATIVE SHALL WITNESS PERCOLATION TESTS.
2. INSPECTION #2: INSPECTION OF STABILIZED FILL–MECHANICAL COMPACTION METHOD: DIRECTOR'S REPRESENTATIVE SHALL WITNESS PLACEMENT AND COMPACTION OF FILL AND PERCOLATION TESTS.
3. INSPECTION #3: UPON COMPLETION OF INSTALLING TRENCHES, PIPING, TANKS AND EFFLUENT DOSING PUMP STATION PRIOR TO BACKFILLING. FACILITIES TO BE INSPECTED INCLUDE THE FOLLOWING:
   – APPROVED FILL MATERIAL IN–PLACE (FULL DEPTH) INCLUDING ABSORPTION TRENCHES WITH DISTRIBUTION LATERALS EXPOSED.
   – ALL PIPING AND TANKS INSTALLED INCLUDING DOSING PUMP STATION. PUMPS AND ALARM TO BE OPERABLE. CONTRACTOR TO PROVIDE ADEQUATE VOLUME OF WATER TO TEST PUMPS AND ALARM AND TO VERIFY DOSE VOLUMES (2 TEST RUNS PER PUMP MINIMUM).
4. INSPECTION #4: UPON COMPLETION OF FINAL GRADING INCLUDING PLACEMENT OF TOPSOIL AND FINAL SEEDING.

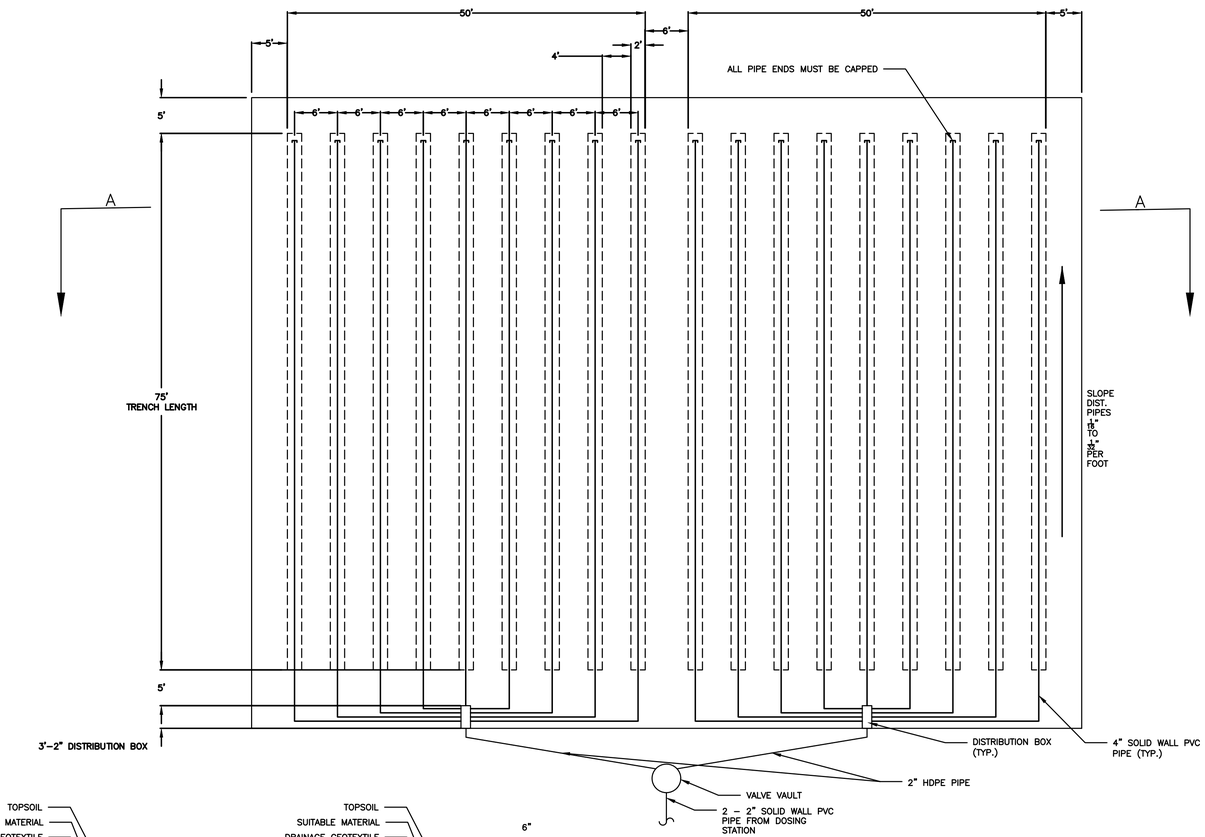

C–508 / 100 ABSORPTION FIELD PLAN VIEW
NOT TO SCALE

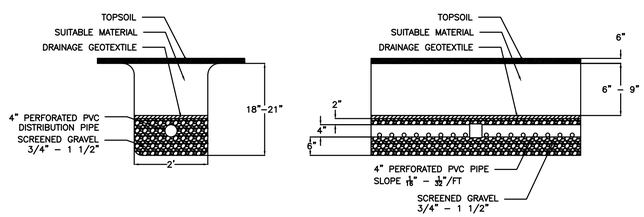

C–508 / 101 TYPICAL ABSORPTION TRENCH DETAIL
NOT TO SCALE

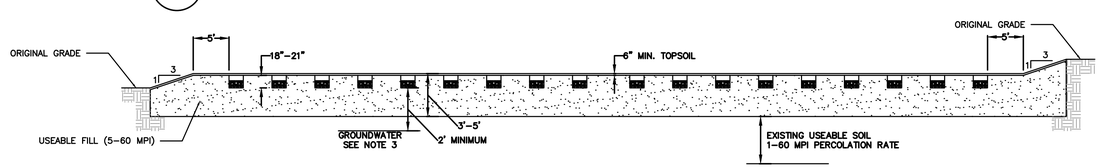

SECTION A–A

C–508 / 102 ABSORPTION FIELD SECTION VIEW
NOT TO SCALE

NOTES:
1. THE AREA EXCAVATED AND FILLED MUST PROVIDE AT LEAST A FIVE (5) FOOT BUFFER IN EACH DIRECTION BEYOND THE TRENCHES.
2. ORIGINAL UNUSEABLE SOIL SHOULD NOT BE USED AS BACKFILL ABOVE THE TRENCHES.
3. A MINIMUM OF 4' VERTICAL SEPARATION FROM BOTTOM OF TRENCH TO BEDROCK OR IMPERMEABLE STRATA IS REQUIRED.

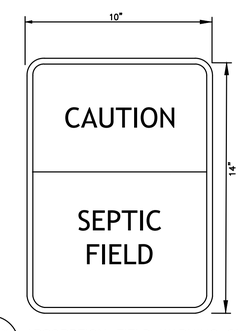

C–508 / 103 ABSORPTION FIELD WARNING SIGN
NOT TO SCALE

NEW YORK STATE OF OPPORTUNITY. Office of General Services
DESIGN & CONSTRUCTION

CONSULTANT:
SHUMAKER Consulting Engineering & Land Surveying, D.P.C.

WARNING:
THE ALTERATION OF THIS MATERIAL IN ANY WAY, UNLESS DONE UNDER THE DIRECTION OF A COMPARABLE PROFESSIONAL, I.E. ARCHITECT FOR AN ARCHITECT, ENGINEER FOR AN ENGINEER OR LANDSCAPE ARCHITECT FOR A LANDSCAPE ARCHITECT, IS A VIOLATION OF THE NEW YORK STATE EDUCATION LAW AND/OR REGULATIONS AND IS A CLASS 'A' MISDEMEANOR.

STATE OF NEW YORK · JAMES M. CUMMINGS · 080958 · LICENSED PROFESSIONAL ENGINEER

CONTRACT:
CONSTRUCTION

TITLE:
PROVIDE SUB-HEADQUARTERS BUILDING

LOCATION:
DOT REGION 8, DUTCHESS COUNTY
205 LIME KILN RD.
EAST FISHKILL,NEW YORK 12533

CLIENT:
NEW YORK STATE DEPARTMENT OF TRANSPORTATION

MARK	DATE	DESCRIPTION
	10/17/2019	BID DOCUMENTS

PROJECT NUMBER:	45552-C
DESIGNED BY:	EFN
DRAWN BY:	AWR
FIELD CHECK:	
APPROVED:	JMC

SHEET TITLE:
ABSORPTION FIELD DETAILS

DRAWING NUMBER:
C-508

36x24 PLOT SHEET

Mar 16,2020 – 1:12pm
E:\2017\17095–East Fishkill NYSDOT Site\Design\PLANS\17095_C512_Absorption Field Details.dwg

NOTES:

1. THRUST RESTRAINT USING THRUST BLOCKS AND TIE RODS ARE SHOWN ON THESE SHEETS. RESTRAINED JOINTS AND RETAINER GLANDS ARE ALSO ACCEPTABLE METHODS.

2. IF THE CONTRACTOR ELECTS TO RESTRAIN INDIVIDUAL JOINTS, EACH JOINT THAT FALLS WITHIN THE MINIMUM RESTRAINED LENGTH, MEASURED FROM THE CENTER OF THE FITTING, AS SHOWN ON THESE SHEETS SHALL BE RESTRAINED, AND SHALL WITHSTAND THE MAXIMUM PRESSURE APPLIED TO THE SYSTEM.

3. CONCRETE SHALL NOT BE PLACED UNDER WATER. IF WATER IS ENCOUNTERED IN THE EXCAVATION THEN THE CONTRACTOR SHALL DEWATER THE EXCAVATION.

4. CONCRETE FOR THRUST BLOCKS SHALL NOT BE ALLOWED TO COVER OR INTERFERE WITH JOINT OR RESTRAINT HARDWARE. PLASTIC SHEETING OR BUILDING FELT MAY BE PLACED OVER PIPE FOR FITTINGS TO PREVENT CONCRETE FROM ADHERING TO SURFACES. CONCRETE FOR THRUST BLOCKS SHALL BE POURED AGAINST UNDISTURBED SOIL.

5. FOR BENDS, BEARING AREA SHALL BE PARALLEL TO THE EDGE OF THE FITTING AT THE FITTING MIDPOINT.

6. FOR TEES, BEARING AREA SHALL BE PERPENDICULAR TO THE BRANCH (SINGLE LEG) AXIS.

7. FOR REDUCERS, BEARING AREA SHALL BE PERPENDICULAR TO THE FITTING AXIS. THE MINIMUM THICKNESS ALONG THE FITTING AXIS SHALL BE 1ft OR THE LENGTH BETWEEN THE BELLS, WHICHEVER IS SMALLER.

8. TO DETERMINE REQUIRED SIZES FOR DIFFERENT CONDITIONS, MULTIPLY THE DIMENSION BY A FACTOR OF THE SPECIFIC VALUE DIVIDED BY A STANDARD VALUE.

   EXAMPLE:
   FOR 12 NPS 45° BEND WITH 100 psi TEST PRESSURE:

   AREA REQUIRED = (4.7' X 2.3') X (100 / 200) = 5.4 ft^2
   WIDTH = 3.3 ft
   HEIGHT = 1.7 ft

9. ALL FITTINGS SHALL BE RESTRAINED WITH BOTH THRUST BLOCKS AND MECHANICAL JOINT RETAINER GLANDS.

10. ALL PIPE JOINTS WITHIN THE RESTRAINED LENGTH OF PIPE SHALL BE RESTRAINED WITH MECHANICAL JOINT RETAINER GLANDS.

11. ALL REFERENCES TO NYSDOT STANDARD SPECIFICATIONS, OR STANDARD SPECIFICATIONS, MEAN THE NEW YORK STATE DEPARTMENT OF TRANSPORTATION STANDARD SPECIFICATIONS, CONSTRUCTION AND MATERIALS, OFFICE OF ENGINEERING (JANUARY 1, 2019) ALL REFERENCES TO THE NYSMUTCD SHALL MEAN THE NEW YORK STATE MANUAL OF UNIFORM TRAFFIC CONTROL DEVICES, 17B NYCRR.

C-509 / 100 THRUST BLOCK NOTES
NOT TO SCALE

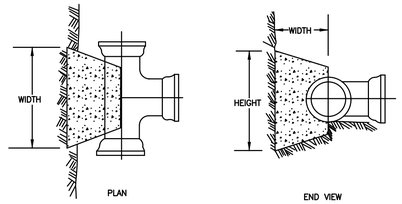

SIZE	WIDTH	HEIGHT	SIZE	WIDTH	HEIGHT
4	24"	12"	14	68"	40"
6	36"	16"	16	80"	44"
8	40"	24"	18	92"	48"
10	52"	28"	20	104"	52"
12	64"	32"	24	124"	64"

NOTE:

1. THRUST BLOCKS SHALL BE CONSTRUCTED OF CONCRETE FOR PIPELINES, CLASS C CONCRETE.

C-509 / 101 TEE/DEAD END THRUST BLOCK DETAILS
NOT TO SCALE

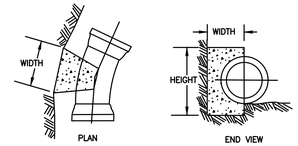

SIZE	WIDTH	HEIGHT	SIZE	WIDTH	HEIGHT
4	12"	5"	14	36"	16"
6	14"	8"	16	40"	20"
8	20"	10"	18	44"	20"
10	24"	12"	20	44"	24"
12	28"	14"	24	56"	28"

NOTES:

1. THRUST BLOCKS SHALL BE CONSTRUCTED OF CONCRETE FOR PIPELINES CLASS C CONCRETE.

2. THRUST BLOCKS SIZES AND MINIMUM RESTRAINED LENGTHS SHOWN ON THESE SHEETS ARE BASED UPON THE FOLLOWING STANDARD CONDITIONS:

   1.5 SAFETY FACTOR
   5 FT DEPTH OF COVER
   200 PSI WATER SYSTEM TEST PRESSURE
   14 PSI SOIL BEARING CAPACITY
   90 PCF SOIL UNIT WEIGHT

C-509 / 102 11.25° BEND THRUST BLOCK
NOT TO SCALE

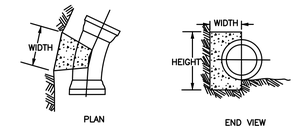

SIZE	WIDTH	HEIGHT	SIZE	WIDTH	HEIGHT
4 NPS	14"	8"	14 NPS	44"	24"
6 NPS	24"	10"	16 NPS	56"	26"
8 NPS	28"	14"	18 NPS	60"	30"
10 NPS	36"	16"	20 NPS	60"	36"
12 NPS	40"	20"	24 NPS	76"	40"

NOTE:

1. THRUST BLOCKS SHALL BE CONSTRUCTED OF CONCRETE FOR PIPELINES CLASS C CONCRETE.

2. THRUST BLOCKS SIZES AND MINIMUM RESTRAINED LENGTHS SHOWN ON THESE SHEETS ARE BASED UPON THE FOLLOWING STANDARD CONDITIONS:

   1.5 SAFETY FACTOR
   5 FT DEPTH OF COVER
   200 PSI WATER SYSTEM TEST PRESSURE
   14 PSI SOIL BEARING CAPACITY
   90 PCF SOIL UNIT WEIGHT

MINIMUM RESTRAINED LENGTH OF PIPE (ft)											
FITTING	NOMINAL PIPE SIZE										
HORIZONTAL BENDS	4 NPS	6 NPS	8 NPS	10 NPS	12 NPS	14 NPS	16 NPS	18 NPS	20 NPS	24 NPS	
11 1/4°	1.3'	2.0'	2.7'	3.0'	3.7'	4.0'	4.7'	5.0'	5.7'	6.3'	
22 1/2°	1.3'	2.0'	2.7'	3.0'	3.7'	4.0'	4.7'	5.0'	5.7'	6.7'	
45°	3.0'	4.0'	5.3'	6.3'	7.7'	8.7'	9.7'	10.7'	11.7'	13.7'	
90°	7.0'	10.0'	12.7'	15.7'	18.3'	31.0'	23.3'	26.0'	28.3'	33.0'	
DEAD ENDS	8.7'	12.7'	16.3'	16.3'	23.3'	26.7'	30.0'	33.3'	36.7'	43.0'	

NOTE: FOR POLYETHYLENE WRAPPED PIPE, MULTIPLY VALUES IN TABLE BY 1.45

C-509 / 103 22.5° BEND THRUST BLOCK
NOT TO SCALE

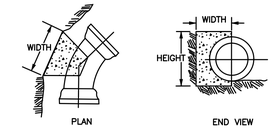

SIZE	WIDTH	HEIGHT	SIZE	WIDTH	HEIGHT
4 NPS	24"	10"	14 NPS	64"	32"
6 NPS	32"	14"	16 NPS	68"	40"
8 NPS	40"	20"	18 NPS	88"	40"
10 NPS	48"	24"	20 NPS	88"	48"
12 NPS	56"	28"	24 NPS	108"	56"

NOTE:

1. THRUST BLOCKS SHALL BE CONSTRUCTED OF CONCRETE FOR PIPELINES CLASS C CONCRETE.

2. THRUST BLOCKS SIZES AND MINIMUM RESTRAINED LENGTHS SHOWN ON THESE SHEETS ARE BASED UPON THE FOLLOWING STANDARD CONDITIONS:

   1.5 SAFETY FACTOR
   5 FT DEPTH OF COVER
   200 PSI WATER SYSTEM TEST PRESSURE
   14 PSI SOIL BEARING CAPACITY
   90 PCF SOIL UNIT WEIGHT

C-509 / 104 45° BEND THRUST BLOCK
NOT TO SCALE

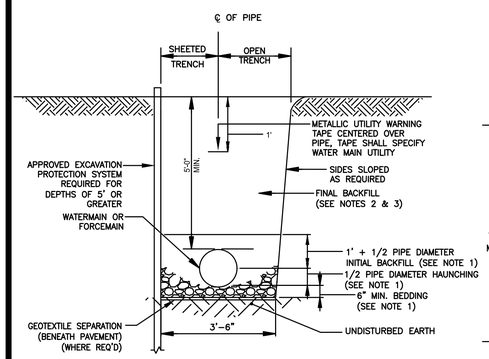

NOTES:
1. CUT EXISTING WELL CASING TO 6" BELLOW FINISH GRADE.
2. PLACE WELL COVER AT FINISH GRADE AND PROVIDE CONCRETE RING AROUND COVER.

NOTES:

1. BEDDING, HAUNCHING AND INITIAL BACKFILL SHALL BE CUSHION MATERIAL.
2. FINAL BACKFILL SHALL BE SUITABLE MATERIAL IN GRASS AREAS.
3. FINAL BACKFILL SHALL BE SELECT GRANULAR MATERIAL WITHIN AND 5 FEET EACH SIDE OF ALL HARD SURFACES (ASPHALT, CONCRETE AND GRAVEL PAVEMENT).
4. IN UNSTABLE MATERIAL OR ROCKY AREAS, PROVIDE BEDDING AND FOUNDATION AT LEAST 6" DEEP BELOW NORMAL BEDDING AND TO THE APPROVAL OF THE DIRECTORS REPRESENTATIVE.
5. RESTORE TRENCH TO ORIGINAL CONDITIONS.

C-509 / 105 WATERMAIN AND SANITARY SEWER FORCE MAIN TRENCH
NOT TO SCALE

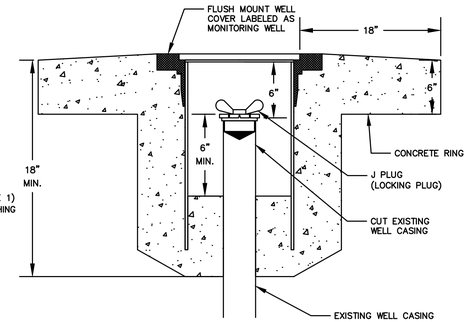

C-509 / 106 WELL CAP
NOT TO SCALE

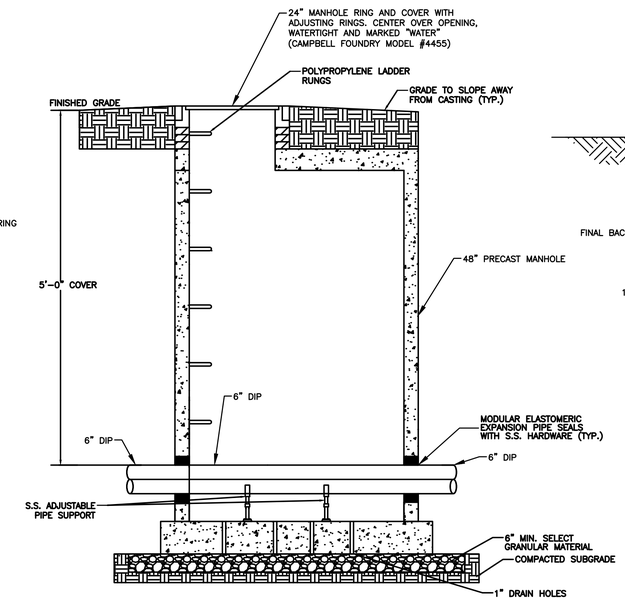

C-509 / 107 MANHOLE FOR FUTURE AIR/VAC VALVE
NOT TO SCALE

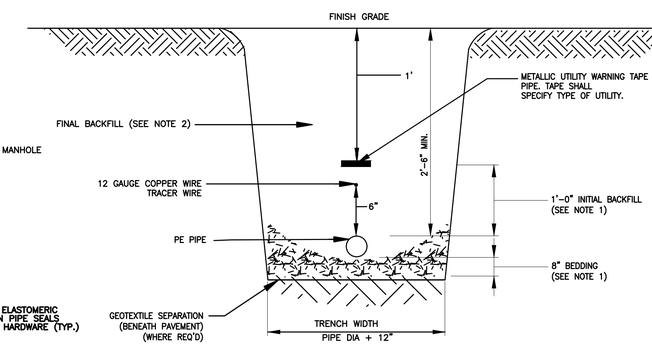

NOTE:
1. BEDDING, HAUNCHING AND INITIAL BACKFILL SHALL BE CUSHION MATERIAL.
2. FINAL BACKFILL SHALL BE SUITABLE MATERIAL IN GRASS AREAS.
3. FOR TRENCH DEPTHS OF 5' OR GREATER AN APPROPRIATE EXCAVATION SYSTEM IS REQUIRED.

C-509 / 108 GAS MAIN TRENCH DETAIL
NOT TO SCALE

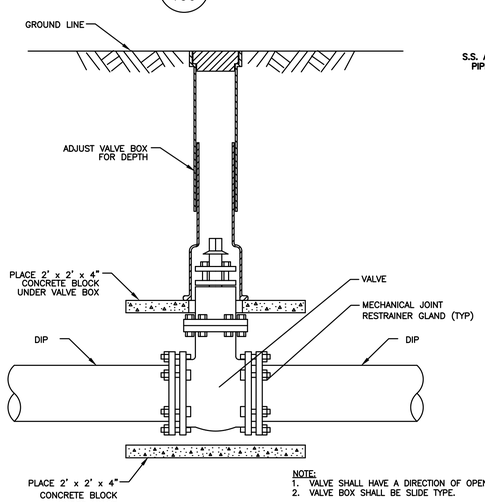

NOTE:
1. VALVE SHALL HAVE A DIRECTION OF OPENING TO THE LEFT.
2. VALVE BOX SHALL BE SLIDE TYPE.

C-509 / 109 VALVE DETAIL
NOT TO SCALE

36x24 PLOT SHEET

Mar 16,2020 – 1:12pm
E:\2017\17095-East Fishkill NYSDOT Site\Design\PLANS\17095_C510_WATER SYSTEM_Details.dwg

NEW YORK STATE OF OPPORTUNITY. Office of General Services
DESIGN & CONSTRUCTION

CONSULTANT:
SHUMAKER
Consulting Engineering & Land Surveying, D.P.C.

WARNING:
THE ALTERATION OF THIS MATERIAL IN ANY WAY, UNLESS DONE UNDER THE DIRECTION OF A COMPARABLE PROFESSIONAL, I.E. ARCHITECT FOR AN ARCHITECT, ENGINEER FOR AN ENGINEER OR LANDSCAPE ARCHITECT FOR A LANDSCAPE ARCHITECT, IS A VIOLATION OF THE NEW YORK STATE EDUCATION LAW AND/OR REGULATIONS AND IS A CLASS 'A' MISDEMEANOR.

STATE OF NEW YORK · JAMES M. CUMMINGS · 080958 · LICENSED PROFESSIONAL ENGINEER

CONTRACT:
CONSTRUCTION

TITLE:
PROVIDE SUB-HEADQUARTERS BUILDING

LOCATION:
DOT REGION 8, DUTCHESS COUNTY
205 LIME KILN RD.
EAST FISHKILL,NEW YORK 12533

CLIENT:
NEW YORK STATE DEPARTMENT OF TRANSPORTATION

MARK	DATE	DESCRIPTION
	10/17/2019	BID DOCUMENTS

PROJECT NUMBER:	45552-C
DESIGNED BY:	EFN
DRAWN BY:	AWR
FIELD CHECK:	
APPROVED:	JMC

SHEET TITLE:
WATER DETAILS

DRAWING NUMBER:
C-509

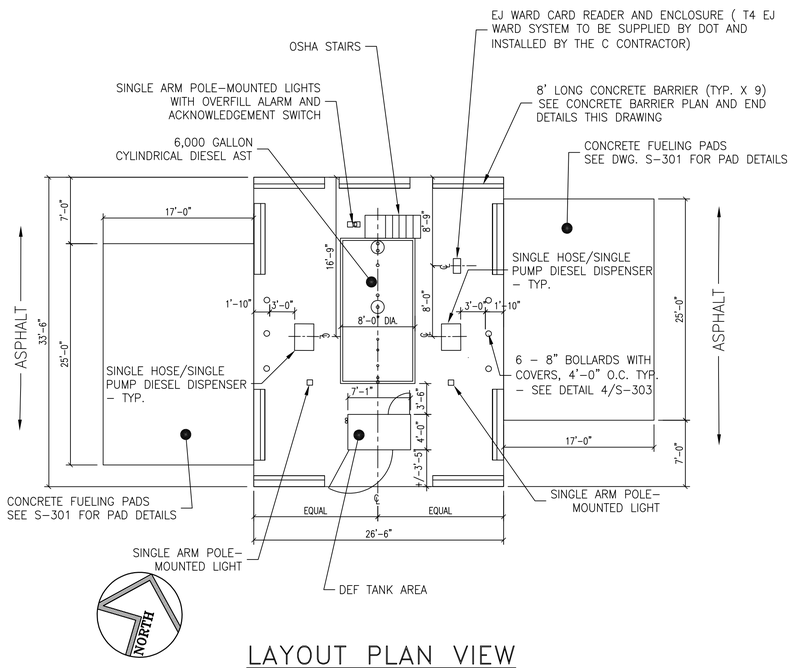

LAYOUT PLAN VIEW

SCALE: NTS

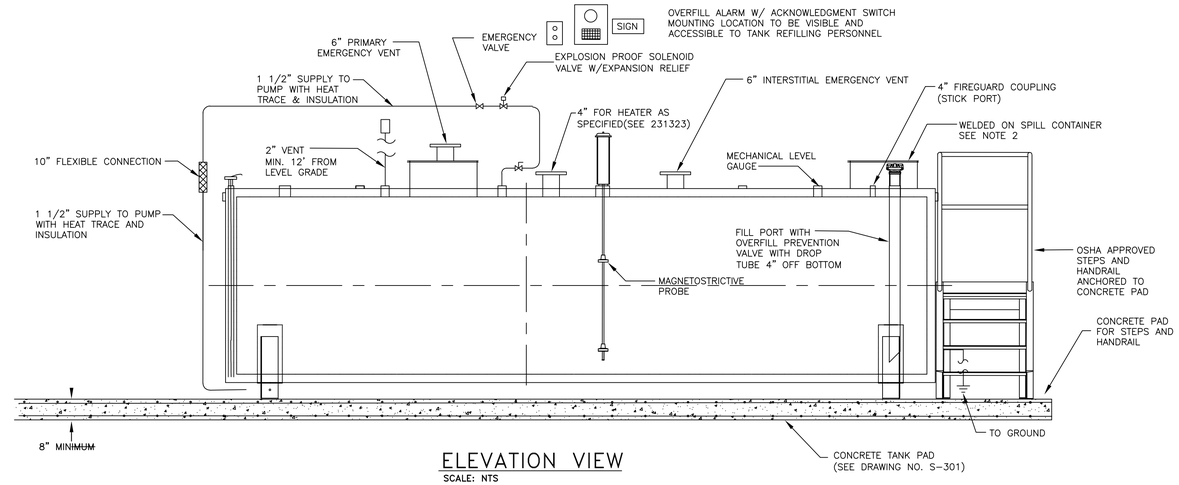

ELEVATION VIEW

SCALE: NTS

NOTES:

1. TANK SHOWN IS TYPICAL FOR 6,000 GALLON CAPACITY. CONSULT WITH MANUFACTURER FOR REQUIRED DIMENSIONS, FITTING ARRANGEMENT, SUPPORT SADDLES AND ANCILLARY EQUIPMENT FOR TANK.
2. PROVIDE WELDED ON SPILL CONTAINER APPROX. 24" DIA. X 13 1/2" HT. X 1/4" THICK WITH LOCKABLE LID FOR TANKS 1,000 GAL AND LARGER. PROVIDE 10 GAL SPILL CONTAINER FOR 500 GAL TANKS.
3. SADDLE LOCATION AS PER TANK MANUFACTURER SPECIFICATIONS.
4. TANKS SHALL BE CONSTRUCTED IN ACCORDANCE WITH UL 2085 SPECIFICATIONS.
5. AFTER NEW 6,000 GAL DIESEL FUEL SYSTEM IS IN STALLED, TESTED AND IN FULL OPERATION. THEN CLEAN & REMOVE EXISTING 4000 GAL DIESEL AND 4000 GAL UNLEADED GAS TANKS, PUMPS, SUPPORT SADDLES, PIPING, WIRING, FUEL MONITORING SYSTEM AND ANCILLARY EQUIPMENT FOR BOTH TANKS. EXISTING STRUCTURE IS TO REMAIN. SEE DRAWING D–101 FOR LOCATION OF EXISTING TANKS.

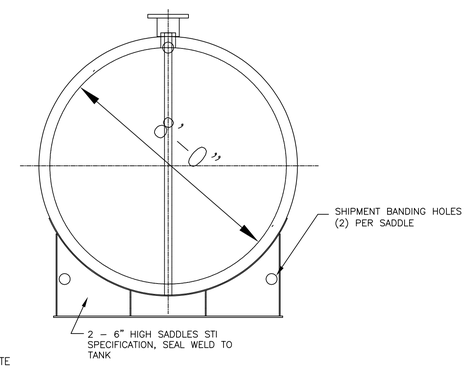

END VIEW

SCALE: NTS

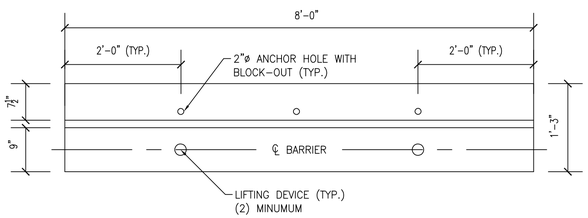

NOTES:

1. FOR 8'–0" BARRIER A MINIMUM OF THREE (3) ANCHOR HOLES ARE REQUIRED.

CONCRETE BARRIER PLAN VIEW

SCALE: NONE

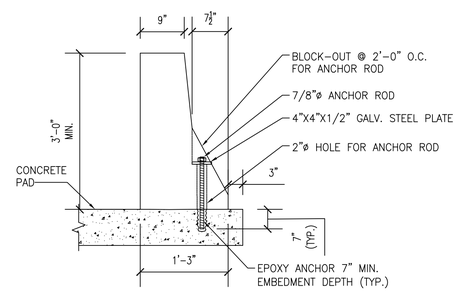

CONCRETE BARRIER END VIEW

SCALE: NONE

NOTES:

1. CONCRETE FOR SLAB–ON–GRADE SHALL HAVE A MINIMUM 28 DAY COMPRESSIVE STRENGTH OF 5000 PSI.
2. CONCRETE FOR PRECAST CONCRETE BARRIER SHALL HAVE A MINIMUM 28 DAY COMPRESSIVE STRENGTH OF 5000 PSI.
3. ANCHOR RODS SHALL BE 7/8" IN DIAMETER AND HAVE AN ULTIMATE TENSILE STRENGTH OF 60 KSI.
4. THE 4"X4"X1/2" GALV. STEEL PLATES SHALL HAVE A MINIMUM YIELD STRENGTH OF 36 KSI.
5. ANCHOR RODS SHALL BE DRILLED AND GROUTED INTO CONCRETE SLAB USING HILTI HVU ADHESIVE ANCHORING SYSTEM OR APPROVED EQUAL. ULTIMATE BOND/CONCRETE CAPACITY IN TENSION SHALL BE 36 KSI.
6. AFTER ANCHOR RODS ARE INSTALLED IN CONCRETE SLAB, SET PRECAST BARRIER AND GROUT ANCHOR RODS HOLES IN BARRIER WITH NON–SHRINK GROUT FROM NYSDOT APPROVED MATERIALS LIST.
7. AFTER ANCHOR HOLES ARE GROUTED, INSTALL 4"X4"X1/2" STEEL PLATE AND HEX NUT. TIGHTEN HEX NUT AND GROUT BLOCK–OUTS WITH NON–SHRINK GROUT.

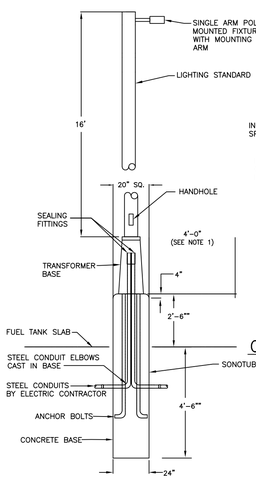

LIGHTING STANDARD DETAIL

SCALE: NTS

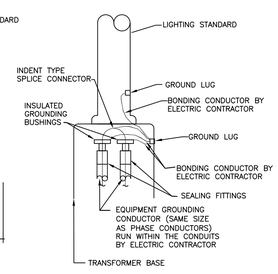

GROUNDING AND BONDING DETAIL FOR LIGHTING STANDARD

SCALE: NONE

NOTE:

1. LOCATE LIGHTING STANDARD A MINIMUM OF 4' AWAY FROM FUEL DISPENSERS AND FUEL TANKS.

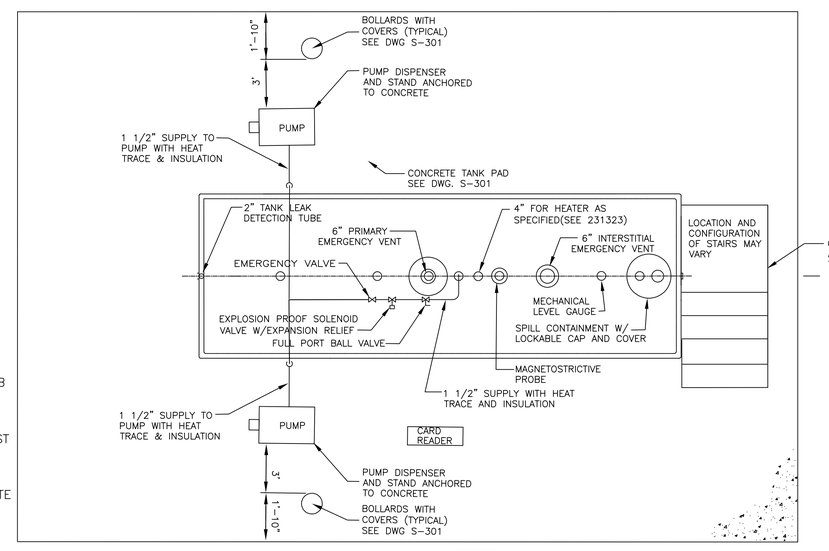

PLAN VIEW

SCALE: NTS

NOTES:

1. SIMILAR INSTALLATION FOR RECTANGULAR OR CYLINDRICAL TYPE TANK.
2. PROVIDE WELDED ON SPILL CONTAINER APPROX. 24" DIA. X 13 1/2" HT. X 1/4" THICK WITH LOCKABLE LID FOR TANKS 1,000 GAL AND LARGER.

NEW YORK STATE OF OPPORTUNITY. Office of General Services

DESIGN & CONSTRUCTION

CONSULTANT

WARNING:

THE ALTERATION OF THIS MATERIAL IN ANY WAY, UNLESS DONE UNDER THE DIRECTION OF A COMPARABLE PROFESSIONAL, I.E. ARCHITECT FOR AN ARCHITECT, ENGINEER FOR AN ENGINEER OR LANDSCAPE ARCHITECT FOR A LANDSCAPE ARCHITECT, IS A VIOLATION OF THE NEW YORK STATE EDUCATION LAW AND/OR REGULATIONS AND IS A CLASS 'A' MISDEMEANOR.

STATE OF NEW YORK · BRYAN W. JONES · 096041 · LICENSED PROFESSIONAL ENGINEER

CONTRACT:
CONSTRUCTION

TITLE:
PROVIDE SUB–HEADQUARTERS BUILDING

LOCATION:
DOT REGION 8, DUTCHESS COUNTY
205 LIME KILN ROAD, (OFF I–84 EXIT 15)
EAST FISHKILL, NY 12533

CLIENT:
DEPARTMENT OF TRANSPORTATION

MARK	DATE	DESCRIPTION
	10/17/2019	BID DOCUMENTS

PROJECT NUMBER:	45552 – C
DESIGNED BY:	B. WOLFORD
DRAWN BY:	B. WOLFORD
FIELD CHECK:	
APPROVED:	

SHEET TITLE:
DIESEL FUEL TANK PLAN AND SECTION

DRAWING NUMBER:
C–510

SHEET OF

May 12,2020 – 6:08pm
V:\DesignAndConstr\P45Sxx\45552\30_DesignPhase\35_CAD\CadSite\C-510 AST CYLINDRICAL WITH INSTALLATION TYPE D-1 PACKAGES.dwg
36x24 PLOT SHEET

DESIGN DATA NOTES

1. GENERAL:

DESIGN PROVISIONS .... 2017 NEW YORK STATE UNIFORM CODE (NYSUC) INCORPORATING THE 2015 INTERNATIONAL BUILDING CODE (IBC)
RISK CATEGORY II
TERRAIN/EXPOSURE CATEGORY C
BASIC SEISMIC/MAIN WIND FORCE RESISTING SYSTEM: ASCE 7 - TABLE 12.2-1
PEMB: .... MOMENT AND BRACED FRAMES - H
PUMPHOUSE: .... ORDINARY CONCRETE SHEARWALL - B-6

2. LIVE LOADS:

FLOORS AND ROOFS HAVE BEEN DESIGNED TO SUPPORT THE UNIFORMLY DISTRIBUTED LIVE LOAD OR THE CONCENTRATED LIVE LOADS NOTED BELOW, WHICHEVER PRODUCED THE GREATER LOAD EFFECTS.

UNIFORMLY DISTRIBUTED LIVE LOADS:

ROOF:
UNIFORM GROUND SNOW LOAD (P_g) .... 30 psf
UNIFORM FLAT-ROOF SNOW LOAD (P_f) .... 21 psf
SNOW EXPOSURE FACTOR (C_e) 1
THERMAL FACTOR (C_t) 1
IMPORTANCE FACTOR (I_s) 1
LIVE LOAD .... 20 psf
NOTE: ROOF DESIGNED FOR WORST CASE SNOW LOAD OR LIVE LOAD.

RAIN-ON-SNOW SURCHARGE LOAD .... N/A
(DRIFTED, UNBALANCED, AND SLOPED-ROOF SLIDING SNOW IN ACCORDANCE WITH AMERICAN SOCIETY OF CIVIL ENGINEERS (ASCE) STANDARD 7-10. SEE 2/S001 AND 3/S001 FOR LOADING DIAGRAM.

FLOORS: (OFFICE) .... 50 psf

3. DEAD LOADS:

ROOF: (PEMB) SUPERIMPOSED .... 8 psf
AS PROVIDED BY PRE-ENGINEERED BUILDING MANUFACTURER (PEMB)

ROOF: (PUMPHOUSE)
ROOFING: .... 5 psf
MEP: .... 5 psf
8" PRECAST PLANK: .... 54 psf

FLOORS: (PEMB)
FINISHES: .... 2 psf
TOPPING: .... 25 psf
MEP: .... 5 psf
8" PRECAST PLANK: .... 54 psf

PORTION OF ABOVE DEAD LOAD CONSIDERED FOR MECHANICAL EQUIPMENT AND PIPING SUSPENDED FROM STRUCTURAL FRAMING: .... 5 psf

4. SEISMIC LOADS:

SITE CLASS: .... B
SHORT-PERIOD DESIGN ACCELERATION (S_{ds}): 0.142
ONE-SECOND DESIGN ACCELERATION (S_{d1}): 0.0446
SHORT PERIOD MAPPED SPECTRAL RESPONSE (S_s): 0.213
ONE-SECOND MAPPED SPECTRAL RESPONSE (S1): 0.067
SEISMIC DESIGN CATEGORY: .... A
IMPORTANCE FACTOR (I_e): 1
SYSTEM COEFFICIENT R (PEMB): 3
SYSTEM COEFFICIENT R (PUMPHOUSE): 5
ANALYSIS PROCEDURE: .... ELFP
SEISMIC RESPONSE COEFFICIENT (C_s): (PEMB) 0.0473
SEISMIC DESIGN BASE SHEAR (V): (PEMP) .... 31.5 kips
SEISMIC RESPONSE COEFFICIENT (C): (PUMPHOUSE) 0.071
SEISMIC DESIGN BASE SHEAR (V): (PUMPHOUSE) .... 3.5 kips

5. WIND LOADS:

MAIN WIND FORCE RESISTING SYSTEM LOADS HAVE BEEN GENERATED ACCORDING TO ASCE 7-10, AS REFERENCED IN THE 2015 INTERNATIONAL BUILDING CODE (IBC) SECTION 1609.1 USING THE FOLLOWING PROCEDURE:

THE ENVELOPE PROCEDURE PART 2 (ASCE 7-10, SECTION 28.5)

ULTIMATE WIND SPEED (3 SECOND GUST) (Vult): .... 115 mph
NOMINAL WIND SPEED (3 SECOND GUST) (Vasd): .... 90 mph
HEIGHT OF MAIN ROOF: .... 32 feet
TOPOGRAPHIC FACTOR (Kzt): 1
ENCLOSURE CLASSIFICATION: .... ENCLOSED
INTERNAL PRESSURE COEFFICIENT (GCpi): 0.08
WIND DESIGN BASE SHEAR: (PEMB)
NORTH-SOUTH: .... 97 kips
EAST-WEST: .... 65.2 kips

SEE 1/S001 FOR ADDITIONAL WIND LOAD DATA FOR ROOFS, OVERHANGS, COMPONENTS, AND CLADDING. NET UPLIFT LOAD ON ROOF FRAMING COMPONENTS SHALL BE DETERMINED BY DEDUCTING 5 psf DEAD LOAD FROM THE TABULATED ROOF WIND LOADS FOR COMPONENTS AND CLADDING. NET UPLIFT VALUE SHALL BE A MINIMUM OF 10 psf.

6. SOIL PRESSURE:

PRESUMPTIVE SOIL BEARING PRESSURE: 4,000 PSF ON SLIGHTLY WEATHERED NATIVE SOILS.

FOUNDATION DESIGN BASED ON RECOMMENDATIONS INCLUDED IN. THE FOLLOWING SUBSURFACE INVESTIGATIONS REPORTS: NYSDOT FISHKILL YARD SUB HEADQUARTERS BUILDING ADDENDUM NO.1 (REVISION 1), JANUARY 15, 2019.

7. STRUCTURAL MATERIAL STRENGTHS:

STRUCTURAL AND MISCELLANEOUS STEEL:
ROLLED STEEL ANGLES .... - ASTM A 36 OR ASTM A 572, GRADE 50

CONCRETE:
FOOTINGS, FOUNDATION WALLS, PIERS, MISCELLANEOUS .... f'c = 4,500 psi
INTERIOR SLABS ON GRADE - OFFICE .... f'c = 3,500 psi
INTERIOR SLAB ON GRADE - GARAGE .... f'c = 5,000 psi
EXTERIOR SLABS ON GRADE .... f'c = 5,000 psi
MISCELLANEOUS CONCRETE .... f'c = 3,000 psi
(SEE SPECIFICATIONS FOR SLUMP AND AIR ENTRAINMENT)

MASONRY:
CONCRETE BLOCK: .... ASTM C 90, WITH AVERAGE NET COMPRESSIVE STRENGTH OF 2,000 psi
MORTAR: .... ASTM C 270, TYPE S
UNIT MASONRY: .... ASTM C 90 CMU (2,000 psi) AND TYPE S MORTAR f'm = 2,000 psi
GROUT: .... ASTM C 476, COMPRESSIVE STRENGTH OF 2,500 psi, 8 TO 11-INCH SLUMP.

REINFORCING STEEL FOR CONCRETE AND MASONRY: .... ASTM A 615, GRADE 60

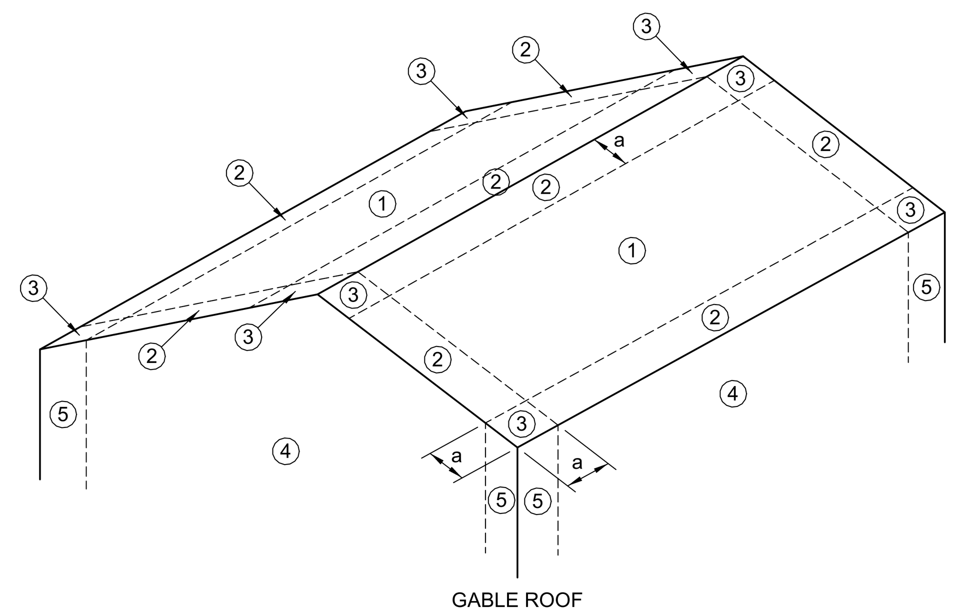

1 / S-001 COMPONENTS AND CLADDING WIND PRESSURE ZONE DIAGRAMS
NOT TO SCALE
NOTE:
a = 10' 6"

DESIGN WIND PRESSURE FOR EXTERIOR COMPONENTS AND CLADDING MATERIALS

BASIC WIND: Vult→115 mph H (ft)= 27
EXPOSURE: C Kzt= 1

ROOF TYPE	SURFACE	EFFECTIVE WIND AREA (sf)	WIND PRESSURE TOWARD SURFACE (psf)	WIND PRESSURE AWAY FROM SURFACE (psf)
>7° TO 27°	ZONE 1 ROOF	10	18.8	-29.9
		20	17.1	-29.1
		50	16.0	-28.0
		100	16.0	-27.1
	ZONE 2 ROOF EDGES	10	18.8	-51.9
		20	17.1	-47.8
		50	16.0	-42.3
		100	16.0	-38.1
	ZONE 2 ROOF OVERHANG AT ROOF EDGES	10	NA	-60.9
		20	NA	-60.9
		50	NA	-60.9
		100	NA	-60.9
	ZONE 3 ROOF CORNERS	10	18.8	-76.8
		20	17.1	-71.8
		50	16.0	-65.2
		100	16.0	-60.3
	ZONE 3 ROOF OVERHANGS AT ROOF CORNERS	10	NA	-102.2
		20	NA	-92.2
		50	NA	-79.1
		100	NA	-69.1
	ZONE 4 WALL	10	32.6	-35.4
		20	31.1	-33.9
		50	29.2	-31.9
		100	27.7	-30.4
		500	24.3	-27.1
	ZONE 5 WALL CORNERS	10	32.6	-43.7
		20	31.1	-40.7
		50	39.2	-36.9
		100	27.7	-33.9
		500	24.3	-27.1

22 / S-001 WIND DATA FOR COMPONENT AND CLADDING
12" = 1'-0"

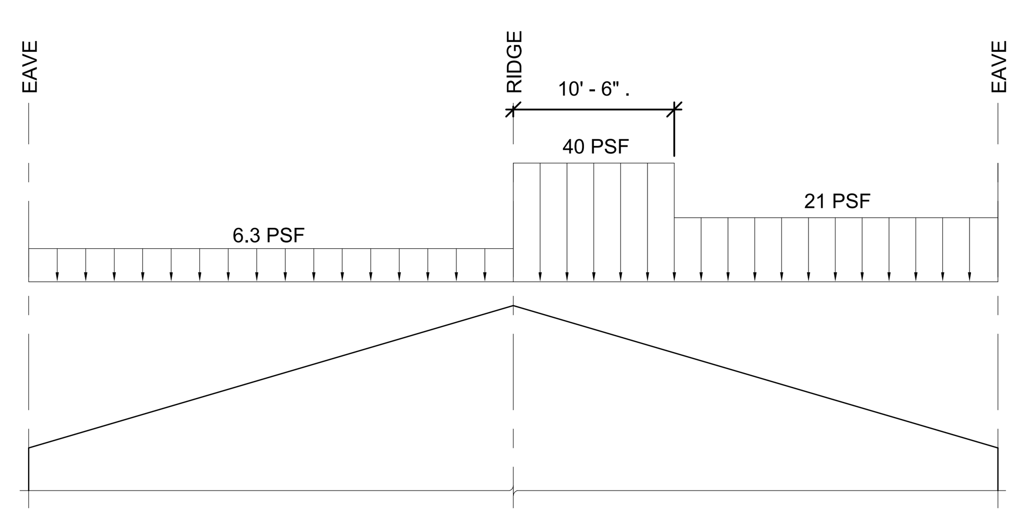

2 / S-001 UNBALANCED SNOW LOADING DIAGRAM
1/16" = 1'-0"

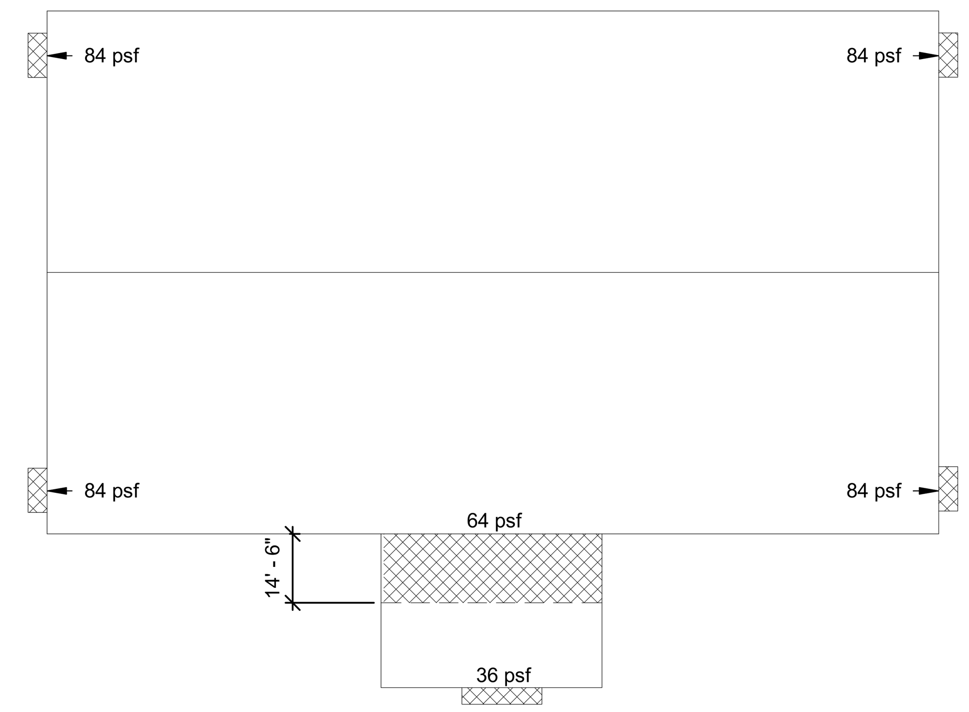

NOTES:

1. - DENOTES DRIFTED SNOW LOADS IN ADDITION TO FLAT SNOW LOADS SHOWN.
2.

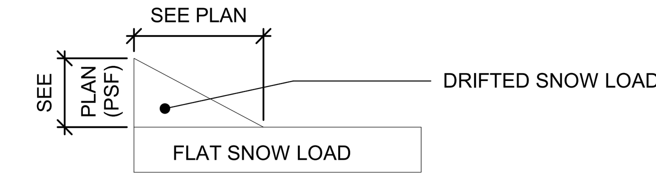

3 / S-001 DRIFT LOAD DIAGRAM
NOT TO SCALE

GENERAL NOTES

1. DESIGNED IN ACCORDANCE WITH THE 2017 NEW YORK STATE UNIFORM CODE (NYSUC).
2. DO NOT SCALE DRAWINGS. CONTRACTOR SHALL NOTIFY DIRECTOR'S REPRESENTATIVE OF ANY DISCREPANCIES IN DIMENSIONS BETWEEN EXISTING CONDITIONS AND/OR ARCHITECTURAL DRAWINGS AND THE STRUCTURAL DRAWINGS.
3. DO NOT CHANGE SIZE OR SPACING OF STRUCTURAL ELEMENTS.
4. DETAILS SHOWN ARE TYPICAL; SIMILAR DETAILS APPLY TO SIMILAR CONDITIONS UNLESS OTHERWISE INDICATED.
5. THE NOTES ON THIS DRAWING ARE TYPICAL UNLESS OTHERWISE INDICATED.
6. BRACE BUILDING UNTIL STRUCTURAL ELEMENTS NEEDED FOR STABILITY ARE INSTALLED. THESE ELEMENTS ARE AS FOLLOWS: (FLOOR DECK, ROOF DECK, BRACING MEMBERS, SHEAR WALLS, MOMENT CONNECTIONS, ETC.).
7. NOTIFY THE DIRECTOR'S REPRESENTATIVE IN WRITING OF DEVIATIONS OR SUBSTITUTIONS FROM DIMENSIONS, MATERIALS, OR EQUIPMENT SHOWN ON THE DRAWINGS AND MAKE ONLY THOSE DEVIATIONS OR SUBSTITUTIONS ACCEPTED BY DIRECTOR'S REPRESENTATIVE.
8. DETERMINE EXACT LOCATIONS OF EXISTING UTILITIES BEFORE COMMENCING WORK. CONTRACTOR AGREES TO BE FULLY RESPONSIBLE FOR DAMAGES WHICH MIGHT OCCUR AS A RESULT OF FAILING TO EXACTLY LOCATE AND PRESERVE EXISTING UTILITIES.
9. DO NOT SUSPEND MECHANICAL, ELECTRICAL, OR PLUMBING ITEMS FROM ROOF DECK. REFER TO THE HVAC, ELECTRICAL, AND PLUMBING DRAWINGS AND SPECIFICATIONS FOR HANGERS AND SUPPLEMENTAL FRAMING REQUIRED TO ATTACH THESE ITEMS TO THE MAIN ROOF FRAMING.
10. THESE DRAWINGS DO NOT INCLUDE NECESSARY COMPONENTS FOR CONSTRUCTION SAFETY. CONTRACTOR SHALL BE SOLELY RESPONSIBLE FOR CONSTRUCTION SAFETY.

FOUNDATION NOTES

1. BEAR FOOTINGS ON UNDISTURBED NATIVE SOILS.
2. FOOTINGS HAVE BEEN DESIGNED FOR A SOIL BEARING PRESSURE OF 4000 psf. BEARING STRATUM FOR THIS CAPACITY SHALL BE VERIFIED IN FIELD BY A LICENSED GEOTECHNICAL ENGINEER BEFORE CASTING CONCRETE FOOTINGS.
3. ELEVATIONS OF BOTTOM OF FOOTINGS ARE FOR ESTIMATING PURPOSES AND WILL BE ADJUSTED TO REQUIRED BEARING STRATA AS DETERMINED UPON EXCAVATION.
4. WHERE FOOTING ELEVATIONS ARE LOWERED DUE TO SOIL CONDITIONS, LOWER ADJACENT FOOTINGS IN ELEVATION IN ORDER THAT RATIO OF CLEAR DISTANCE BETWEEN NEAREST EDGE OF FOOTINGS TO DIFFERENCE IN ELEVATION BETWEEN BOTTOMS OF FOOTINGS SHALL NOT EXCEED 2H:1V.
5. FOUNDATION PREPARATION: REFER TO SPECIFICATIONS FOR “EXCAVATION, BACKFILL, AND COMPACTION (BUILDING AREA).”
6. STRIP AND PROOF ROLL ENTIRE BUILDING AREA. VERIFY PROCEDURES WITH GEOTECHNICAL ENGINEER BEFORE BEGINNING. SEE SPECIFICATIONS FOR ADDITIONAL INFORMATION.
7. DO NOT PLACE FOOTINGS IN WATER OR ON FROZEN GROUND.
8. DO NOT ALLOW GROUND BENEATH FOOTINGS TO FREEZE.
9. CENTER FOOTINGS UNDER WALLS, PIERS, AND COLUMNS UNLESS NOTED OTHERWISE.
10. CONCRETE WALLS SHALL ATTAIN A MINIMUM STRENGTH OF 70% f'c BEFORE PLACING BACKFILL AGAINST THEM.
11. WALLS THAT ARE TO BE BACKFILLED ON ONE SIDE ONLY MAY BE BACKFILLED UP TO 3 FEET ABOVE THE TOP OF FOOTING AFTER WALLS ATTAIN MINIMUM STRENGTH OF 70% f'c. REMAINING BACKFILL MAY NOT BE PLACED UNTIL TOP SLAB IS IN PLACE, SLAB ATTAINS MINIMUM STRENGTH OF 70% f'c, AND WALLS ATTAIN MINIMUM STRENGTH 100% f'c.

LINTEL NOTES

1. COORDINATE WALL OPENINGS WITH ARCHITECTURAL AND HVAC DRAWINGS. NOT ALL OPENINGS ARE SHOWN IN THE STRUCTURAL DRAWINGS.
2. FOR OPENINGS NOT OTHERWISE DETAILED OR SCHEDULED, INCLUDING DOORS, WINDOWS, AND MECHANICAL OPENINGS, MINIMUM LINTELS SHALL BE (FOR EACH 4 INCHES OF MASONRY WIDTH) ONE L3 1/2X3 1/2X 5/16 FOR SPANS UP TO 4 FEET; ONE L4 X 3 1/2X 5/16 (LLV) FOR SPANS UP TO 6 FEET; ONE L5X3 1/2X5/16 (LLV) FOR SPANS UP TO 8 FEET.
3. WELD TOGETHER BACK TO BACK LINTELS. MAXIMUM WELD SPACING SHALL NOT EXCEED 18 INCHES ON CENTER.
4. BEAR LINTELS A MINIMUM OF 8 INCHES EACH END UNLESS NOTED OTHERWISE.
5. HOT-DIP GALVANIZE LINTELS IN EXTERIOR WALLS.

CAST-IN-PLACE CONCRETE NOTES (FOUNDATION)

1. REINFORCE CONCRETE ELEMENTS INCLUDING FOOTINGS, WALLS, PIERS, AND SLABS. REINFORCEMENT SHOWN PERTAINS TO TYPICAL CONDITIONS.
2. LAP SPLICE CONCRETE REINFORCEMENT AS INDICATED IN THE CONCRETE REINFORCEMENT LAP SPLICE SCHEDULE, UNLESS NOTED OTHERWISE.
3. LAP CONTINUOUS FOOTING AND HORIZONTAL WALL REINFORCEMENT WITH A CLASS B LAP SPLICE UNLESS NOTED OTHERWISE.
4. PROVIDE CORNER BARS IN FOOTINGS, THE SAME SIZE AND NUMBER AS CONTINUOUS REINFORCEMENT. PROVIDE CLASS B LAP SPLICE WITH MAIN REINFORCEMENT, BUT NO LESS THAN 2'-0".
5. EXTEND REINFORCEMENT IN WALL FOOTINGS BETWEEN COLUMNS INTO COLUMN FOOTINGS WITH A MINIMUM EMBEDMENT EQUAL TO THE MINIMUM BAR DEVELOPMENT LENGTH.
6. PLACE TRANSVERSE REINFORCEMENT IN CONTINUOUS FOOTINGS WHERE SHOWN IN BOTTOM LAYER.
7. CAST STEPPED FOOTINGS MONOLITHICALLY.
8. DOWEL CONCRETE WALLS AND PIERS INTO FOOTINGS WITH DOWELS THE SAME SIZE AND SPACING AS VERTICAL REINFORCEMENT. EXTEND DOWELS TO WITHIN 3 INCHES OF BOTTOM OF FOOTING, TERMINATED WITH A.C.I. STANDARD 90 DEGREE HOOK. PROVIDE CLASS B LAP SPLICE WITH VERTICAL REINFORCEMENT UNLESS NOTED OTHERWISE.
9. AT INTERSECTIONS OF CONCRETE WALLS, PROVIDE CORNER BARS IN OUTER LAYER THE SAME SIZE AND SPACING AS HORIZONTAL REINFORCEMENT AND PROVIDE A CLASS B LAP SPLICE WITH MAIN REINFORCEMENT, BUT NOT LESS THAN 2’-0”. AT “T” INTERSECTIONS, PROVIDE CORNER BARS FROM EACH LAYER IN INTERSECTING WALL TO OUTER LAYER OF THROUGH WALL.
10. PROVIDE KEYS IN CONCRETE WALLS, AND FOOTINGS AT VERTICAL CONSTRUCTION JOINTS UNLESS NOTED OTHERWISE. KEYS SHALL BE 1 1/2 INCHES DEEP AND THE WIDTH OF THE KEY SHALL BE ONE-THIRD THE WALL THICKNESS AND CENTERED WITHIN THE WALL.
11. CAST CONCRETE PIERS IN CONCRETE WALLS MONOLITHICALLY WITH WALLS.
12. VERIFY SIZE AND LOCATION OF MECHANICAL OPENINGS.
13. PIPING, CONDUIT, AND DUCT PENETRATIONS THROUGH STRUCTURAL SLABS AND WALLS SHALL BE SLEEVED OR CHASED. NO CORE-DRILLING OF SLABS OR WALLS IS PERMITTED. PENETRATIONS ARE NOT PERMITTED THROUGH COLUMNS, PIERS, BEAMS, GRADE BEAMS, AND JOISTS.
14. MINIMUM BAR DEVELOPMENT LENGTH EQUALS CLASS A LAP LENGTH.
15. CHAMFER EXPOSED CONCRETE CORNERS AND EDGES 3/4 INCH UNLESS NOTED OTHERWISE.
16. CONCRETE COVER FOR REINFORCEMENT SHALL BE AS INDICATED IN THE CONCRETE COVER SCHEDULE.

CONCRETE REINFORCEMENT LAP SPLICE SCHEDULE

BAR LAP LENGTHS, UNCOATED BARS
CLEAR COVER NOT LESS THAN TWO TIMES BAR DIAMETER
CLEAR SPACING NOT LESS THAN FOUR TIMES BAR DIAMETER

BAR SIZE	MINIMUM CLEAR COVER (INCH)	MINIMUM SPACING CENTER/CENTER (INCH)	CLASS B LAP NOT A TOP BAR (INCH)	CLASS B LAP TOP BAR (INCH)	CLASS A LAP NOT A TOP BAR (INCH)	CLASS A LAP TOP BAR (INCH)
#4	1	2 1/2	22	28	17	22
#5	1 1/4	3 1/8	27	35	21	27
#6	1 1/2	3 3/4	32	42	25	32
#7	1 3/4	4 3/8	38	49	29	38
#8	2	5	43	56	33	43
#9	2 1/4	5 5/8	49	63	37	49
#10	2 1/2	6 1/4	55	71	42	55
#11	2 3/4	6 7/8	61	79	47	61

BAR LAP LENGTHS, UNCOATED BARS
CLEAR COVER NOT LESS THAN BAR DIAMETER
CLEAR SPACING NOT LESS THAN TWO TIMES BAR DIAMETER

BAR SIZE	MINIMUM CLEAR COVER (INCH)	MINIMUM SPACING CENTER/CENTER (INCH)	CLASS B LAP NOT A TOP BAR (INCH)	CLASS B LAP TOP BAR (INCH)	CLASS A LAP NOT A TOP BAR (INCH)	CLASS A LAP TOP BAR (INCH)
#4	1/2	1 1/2	29	37	22	29
#5	5/8	1 7/8	36	46	28	36
#6	3/4	2 1/4	43	56	33	43
#7	7/8	2 5/8	62	81	48	62
#8	1	3	71	93	55	71
#9	1 1/8	3 3/8	80	105	62	80
#10	1 1/4	3 3/4	90	118	70	90
#11	1 3/8	4 1/8	100	131	78	100

NOTES:

1. TOP BARS ARE DEFINED AS HORIZONTAL REINFORCEMENT SO PLACED THAT MORE THAN 12 INCHES OF FRESH CONCRETE IS CAST BELOW THE DEVELOPMENT LENGTH OR SPLICE.
2. USE CLASS B LAP SPLICES, UNLESS NOTED OTHERWISE.
3. FOR COVER AND SPACING DIMENSIONS WHICH ARE IN BETWEEN THE TABULATED VALUES, DO NOT INTERPOLATE, INSTEAD USE THE LONGER LAP LENGTH. SEE CONCRETE COVER SCHEDULE.
4. CALCULATE CENTER TO CENTER SPACING DIMENSIONS OF BARS AT SPLICE LOCATIONS.
5. FOR EPOXY COATED BARS MODIFY THE TABULATED LAP LENGTHS AS FOLLOWS:
   A. FOR TOP BARS AND BARS WHICH ARE NOT A TOP BAR WITH A CLEAR COVER OF GREATER THAN OR EQUAL TO 3 TIMES THE BAR DIAMETER AND CLEAR SPACING GREATER THAN OR EQUAL TO 6 TIMES THE BAR DIAMETER, MULTIPLY THE TABULATED LENGTH BY 1.2.
   B. FOR BARS WHICH ARE NOT A TOP BAR, WITH A CLEAR COVER LESS THAN 3 TIMES THE BAR DIAMETER AND CLEAR SPACING LESS THAN 6 TIMES THE BAR DIAMETER, MULTIPLY THE TABULATED LENGTH BY 1.5.
   C. FOR TOP BARS, WITH A CLEAR COVER LESS THAN 3 TIMES THE BAR DIAMETER AND CLEAR SPACING LESS THAN 6 TIMES THE BAR DIAMETER, MULTIPLY THE TABULATED LENGTH FOR TOP BARS BY 1.3.

NEW YORK STATE OF OPPORTUNITY. Office of General Services
DESIGN & CONSTRUCTION

CONSULTANT:
LaBella Powered by partnership.
RYAN BIGGS CLARK DAVIS ENGINEERING & SURVEYING

WARNING:
THE ALTERATION OF THIS MATERIAL IN ANY WAY, UNLESS DONE UNDER THE DIRECTION OF A COMPARABLE PROFESSIONAL, I.E. ARCHITECT FOR AN ARCHITECT, ENGINEER FOR AN ENGINEER OR LANDSCAPE ARCHITECT FOR A LANDSCAPE ARCHITECT, IS A VIOLATION OF THE NEW YORK STATE EDUCATION LAW AND/OR REGULATIONS AND IS A CLASS 'A' MISDEMEANOR.

CONTRACT: CONSTRUCTION

TITLE: PROVIDE SUB-HEADQUARTERS BUILDING

LOCATION: DOT REGION 8, DUTCHESS COUNTY
205 LIME KILN RD.
EAST FISHKILL, NEW YORK

CLIENT: NEW YORK STATE DEPARTMENT OF TRANSPORTATION

MARK	DATE	DESCRIPTION
	10/17/2019	BID DOCUMENTS

PROJECT NUMBER: 45552-C
DESIGNED BY: JLD
DRAWN BY: RMS
FIELD CHECK:
APPROVED:

SHEET TITLE: DESIGN DATA AND GENERAL NOTES

DRAWING NUMBER: S-001

3/23/2020 4:01:40 PM
C:\Users\RShepherd\Documents\11755-FISHKILL_DOT-CENTRAL-2019_rshepherd@ryanbiggs.com.rvt
36x24 PLOT SHEET

SLAB ON GRADE NOTES

1. SUBGRADE BELOW SLAB ON GRADE SHALL BE REVIEWED AND ACCEPTED BY DIRECTOR'S REPRESENTATIVE BEFORE CONCRETE SLAB PLACEMENT.
2. PROVIDE PROTECTION FROM PRECIPITATION AND EXCESSIVE COLD TEMPERATURES FOR THE VAPOR RETARDER AND SLAB SUBBASE PRIOR TO SLAB-ON-GRADE PLACEMENT. SUBBASE MUST BE DRY AND NOT FROZEN AT THE TIME OF SLAB PLACEMENT.
3. DO NOT PLACE SLABS ON FROZEN GROUND. IF SUBGRADE OR SUBBASE ARE FROZEN AFTER PREPARATION, THEY SHALL BE THAWED THEN RECOMPACTED AND RETESTED FOR COMPACTION PRIOR TO SLAB PLACEMENT, AT THE EXPENSE OF THE CONTRACTOR.
4. PROVIDE PROTECTION FOR THE SLAB ON GRADE FROM DIRECT EXPOSURE TO THE SUN, WIND, PRECIPITATION, AND EXCESSIVE COLD OR HOT TEMPERATURES STARTING DURING PLACEMENT AND LASTING UNTIL THE END OF THE CURING PERIOD. DO NOT ALLOW GROUND BENEATH SLABS TO FREEZE.
5. PRIOR TO SLAB PLACEMENT, SUBMIT FOR INFORMATION ONLY A WRITTEN PROTECTION PROGRAM FOR THE VAPOR RETARDER, SLAB SUBBASE, AND SLAB ON GRADE.
6. SLAB JOINTS ARE REQUIRED WHERE SHOWN ON PLAN.
7. REINFORCE SLABS AS NOTED ON DRAWINGS. AT PERIMETER OF SLABS, LOCATE REINFORCING 3 INCHES FROM SLAB EDGES.
8. PROVIDE ONE #4 BAR, 4 FEET LONG, DIAGONAL AT CORNERS AND OPENINGS IN SLABS ON GRADE.
9. THICKEN SLABS ON GRADE TO 8 INCHES UNDER NONBEARING MASONRY WALLS (6 INCHES THICK OR OVER) WHERE THE WALL HEIGHT EXCEEDS 12 FEET, AND UNDER STAIR STRINGER BEARINGS. COORDINATE REQUIRED LOCATIONS WITH ARCHITECTURAL DRAWINGS.
10. SEE ARCHITECTURAL DRAWINGS FOR EXACT LOCATIONS AND DETAILS OF DEPRESSED SLABS.
11. VERIFY SIZE AND LOCATION OF PLATFORMS, CURBS, OR PADS WITH HVAC CONTRACTOR.
12. SEE SPECIFICATIONS FOR ADDITIONAL INFORMATION AND REQUIREMENTS.

PRECAST CONCRETE PLANK NOTES

1. PLANKS SHALL BE DESIGNED FOR LOADS SHOWN IN DESIGN DATA NOTES.
2. PLANKS SUPPORTING MASONRY SHALL BE DESIGNED TO SUPPORT MASONRY LOAD OF HEIGHT OF WALL BETWEEN VERTICAL SUPPORTS TIMES 55 PLF FOR CMU.
3. THOSE AREAS WHICH ARE TO RECEIVE A 2-INCH TOPPING ARE SHOWN ON THE DRAWINGS. REINFORCE TOPPING WITH FIBERMESH.
4. SUPERIMPOSED LOADS SHOWN INCLUDE WEIGHT OF NON-COMPOSITE TOPPING.
5. TOP OF CONCRETE PLANK ELEVATIONS SHOWN ON PLAN REPRESENT THE ELEVATION OF THE PLANK AT BEARING WALLS. TOP OF CONCRETE AT CENTER OF PLANK WILL VARY DUE TO PLANK CAMBER.
6. ROUGHEN TOP SURFACE OF PLANKS WHICH RECEIVE TOPPING.
7. PLACE NON BEARING PARTITIONS WHICH ARE SUPPORTED BY PLANKS AFTER THE TOPPING HAS CURED A MINIMUM OF 28 DAYS.
8. CONNECT ADJACENT PLANKS USING A GROUTED KEY.
9. MINIMUM PLANK WIDTH: 1 FOOT 6 INCHES. USE ONLY FULL-WIDTH PLANK AT EDGES OF FLOOR AND ROOF AREAS. MAKE CUT OR FORMED OPENINGS IN FULL-WIDTH PLANK ONLY.
10. PLANKS SHALL BE DESIGNED FOR EFFECTS OF SLAB OPENINGS.
11. NO HOLES ARE PERMITTED THROUGH PRECAST PLANK UNLESS SHOWN ON DRAWING OR ACCEPTED BY PRECAST SUPPLIER AND DIRECTOR'S REPRESENTATIVE.
12. COORDINATE SIZE AND LOCATION OF MECHANICAL OPENINGS WITH MECHANICAL CONTRACTOR. PROVIDE HEADERS WHERE REQUIRED.
13. PRODUCE PLANKS TO TOLERANCES LISTED IN PCI MANUAL FOR QUALITY CONTROL. PLANKS NOT IN CONFORMANCE WITH THIS CRITERIA SHALL BE REJECTED. NOTE THAT THIS CRITERIA GIVES A LENGTH TOLERANCE OF +/- 1/2 INCH.
14. CAMBER GROWTH IS A SIGNIFICANT CONCERN. DESIGN PLANK TO MINIMIZE CAMBER GROWTH.
15. FOR ARCHITECTURAL, MECHANICAL, ELECTRICAL, AND PLUMBING ITEMS SUSPENDED FROM PLANKS, ATTACHMENTS SHALL BE LOCATED WITHIN 1 INCH OF CENTERLINE OF PLANK CORES. ATTACHMENTS MUST NOT CONTACT NOR DAMAGE REINFORCING STRANDS IN PLANKS. SUSPENDED LOADS SHALL NOT EXCEED THOSE LISTED IN DESIGN DATA.
16. PLANKS BEARING ON MASONRY WALLS SHALL NOT BE INSTALLED FOR AT LEAST 3 DAYS AFTER WALLS ARE CONSTRUCTED.
17. PROTECT PLANKS FROM DAMAGE AND KEEP FREE OF WATER PRIOR TO AND DURING INSTALLATION.

MASONRY NOTES

1. MASONRY WALLS SHALL HAVE STANDARD WEIGHT JOINT REINFORCEMENT EVERY SECOND COURSE AND TOP TWO COURSES UNLESS NOTED OTHERWISE. PROVIDE LADDER TYPE JOINT REINFORCING FOR REINFORCED MASONRY WALLS. LAP SPLICE JOINT REINFORCEMENT ACCORDING TO LAY SPLICE SCHEDULE. USE PREFABRICATED CORNERS AND TEES.

2. SUBMIT GROUTING PROGRAM FOR GROUTING CONCRETE MASONRY WALLS. GROUTING SHALL BE IN ACCORDANCE WITH RECOMMENDATIONS OF NCMA-TEK 3-2A, "GROUTING CONCRETE MASONRY WALLS." STOP GROUT 2 INCHES BELOW TOP OF BLOCK AT EACH POUR TO ENABLE AN INTERLOCK WITH NEXT POUR. GROUT CORES SOLID AT REINFORCING BARS AND AS INDICATED IN DRAWINGS.

3. SEE 4/S401 FOR ELEVATION OF MASONRY WALL REINFORCING. LAP REINFORCEMENT ACCORDING TO MASONRY LAP SPLICE SCHEDULE.

4. FILL CORES IN HOLLOW CONCRETE MASONRY UNITS WITH GROUT THREE COURSES (24 INCHES) UNDER BEARING PLATES, BEAMS, LINTELS, POSTS, AND SIMILAR ITEMS UNLESS OTHERWISE INDICATED.

5. PROVIDE BOND BEAM AT TOPS OF WALLS, AT EACH FLOOR, AND ELSEWHERE AS DETAILED.

6. NON-LOAD BEARING PARTITIONS SHALL NOT BE BUILT TIGHT TO STRUCTURE ABOVE. LEAVE GAP BETWEEN TOP OF PARTITION AND STRUCTURE, AND BRACE TOP OF PARTITION AS INDICATED IN DRAWINGS.

7. STRUCTURAL DRAWINGS DO NOT SHOW FLASHINGS, WEEPS, OR DRIPS; HOWEVER, THEY ARE ESSENTIAL TO MAINTAINING THE WATERTIGHTNESS OF THE BUILDING AND PROTECTION OF THE FRAMING. REFER TO ARCHITECTURAL DRAWINGS AND SPECIFICATIONS FOR DETAILS AND INFORMATION.

8. VENEER ANCHORS, TIES, WEEPS, AND FLASHING ARE INDICATED IN THE ARCHITECTURAL DRAWINGS AND IN THE SPECIFICATIONS UNLESS DETAILED OR NOTED OTHERWISE.

STRUCTURAL OBSERVATION NOTES

1. THE DIRECTOR'S REPRESENTATIVE WILL MAKE VISITS TO THE SITE AT APPROPRIATE INTERVALS FOR THE PURPOSE OF OBSERVING THE CONSTRUCTION FOR GENERAL CONFORMANCE WITH THE CONTRACT DOCUMENTS. THE FOLLOWING LIST INCLUDES SOME APPROPRIATE TIMES FOR VISITING THE SITE. THE CONTRACTOR SHALL NOTIFY THE DIRECTOR'S REPRESENTATIVE AT LEAST 48 HOURS PRIOR TO PERFORMING THESE ACTIVITIES SO THAT SITE VISITS CAN BE SCHEDULED.
   a. INITIAL PLACEMENT OF REINFORCING BARS FOR FOOTINGS, FOUNDATION WALLS AND PIERS (AFTER EXCAVATION AND PRIOR TO THE CLOSING OF FORMS).
   b. EACH PLACEMENT OF REINFORCING BARS FOR STRUCTURAL CONCRETE.
   c. SLAB PRE-CONSTRUCTION MEETING (SEE DIVISION 3 SPECIFICATIONS).
   d. INITIAL PLACEMENT OF REINFORCING BARS AND PREPARATIONS FOR SLAB ON GRADE (INCLUDING VAPOR RETARDER AND SUBBASE).
   e. INITIAL PLACEMENT OF REINFORCING BARS AND GROUTING OF CONCRETE MASONRY WALLS.
   f. COMPLETION OF THE STRUCTURAL SYSTEM.
   g. OTHER TIMES AS REQUIRED DUE TO FIELD CONDITIONS OR SPECIAL CONSTRUCTION TYPES.

2. THE DIRECTOR'S REPRESENTATIVE MAY VISIT THE SITE AT TIMES OTHER THAN THOSE LISTED IN NOTE 1.
3. THE DIRECTOR'S REPRESENTATIVE WILL PREPARE A FIELD OBSERVATION REPORT FOR EACH SITE VISIT MADE TO OBSERVE CONSTRUCTION. PART II OF EACH REPORT IS FOR CONTRACTOR VERIFICATION AND IS MANDATORY. PART II MUST BE COMPLETED (SIGNED BY THE CONTRACTOR VERIFYING THAT THE REQUIRED ACTION WAS TAKEN AND LISTING THE DATE COMPLETED) AND RETURNED TO THE DIRECTOR'S REPRESENTATIVE IN A TIMELY MANNER.
4. STRUCTURAL OBSERVATION REQUIREMENTS NOTED ABOVE PERTAIN TO THE CONSTRUCTION OF THE FOUNDATION SYSTEM ONLY. REQUIREMENTS FOR THE SUPERSTRUCTURE WILL BE PROVIDED BY THE REGISTERED DESIGN PROFESSIONAL FOR THE PRE-ENGINEERED METAL BUILDING.

MASONRY REINFORCEMENT LAP SPLICE SCHEDULE

BAR LAP LENGTHS IN CMU WITH f'm = 2,000 psi

LOCATION	#4	#5	#6
(1) BAR AT CENTER OF 6" CMU CORE OR BOND BEAM	18"	28"	53"
(1) BAR AT CENTER OF 8" CMU CORE OR BOND BEAM	18"	22"	38"
(1) BAR AT CENTER OF 12" CMU CORE OR BOND BEAM	18"	22"	34"
(2) BARS IN 8" CMU CORE LOCATED 5" FROM EACH FACE SHELL	24"	39"	79"
(2) BARS IN 12" CMU CORE LOCATED 9" FROM EACH FACE SHELL	19"	30"	57"
(2) BARS IN 8", 10", 12" CMU BOND BEAM (SEE NOTE BELOW)	22"	35"	64"

NOTE:
LOCATE REINFORCING BARS 3/4-INCH CLEAR FROM INSIDE FACE OF FACE SHELL (EXCEPT CENTER REINFORCING IN BOND BEAMS DETAILED TO HAVE ONLY ONE BAR).

PRE-ENGINEERED METAL BUILDING NOTES

1. DESIGN OF THE SUPERSTRUCTURE TO BE PROVIDED BY THE PRE-ENGINEERED METAL BUILDING SUPPLIER. COMPLY WITH THE METAL BUILDING MANUFACTURER'S ASSOCIATION "METAL BUILDINGS SYSTEMS MANUAL". THE METAL BUILDING SUPPLIER'S ENGINEER IS THE DELEGATED ENGINEER RESPONSIBLE FOR THE SUPERSTRUCTURE DESIGN AND FOR THE ACCURACY OF THE BUILDING FRAME REACTIONS AS SUPPLIED TO RYAN BIGGS | CLARK DAVIS.

2. SUPERSTRUCTURE SHALL BE DESIGNED PER THE 2017 NEW YORK STATE UNIFORM CODE. METAL BUILDING SUPPLIER SHALL REVIEW STRUCTURAL, ARCHITECTURAL, HVAC, AND ELECTRICAL DRAWINGS AND VERIFY THEIR DESIGN LOADING WITH MATERIALS AND FRAMING SHOWN.

3. NO FABRICATION OF THE PRE-ENGINEERED METAL BUILDING SHALL BEGIN UNTIL SHOP DRAWINGS ARE APPROVED BY THE DIRECTOR'S REPRESENTATIVE. FINAL METAL BUILDING DRAWINGS SHALL BEAR THE SEAL AND SIGNATURE OF A REGISTERED ENGINEER LICENSED TO PRACTICE IN THE STATE OF NEW YORK.

4. LIMIT FRAME SIDEWAY DEFLECTION UNDER DESIGN WIND LOADING TO 1 1/2" IN EITHER DIRECTION. LIMIT DEFLECTIONS DUE TO GRAVITY LOADS IN STRUCTURAL FRAMING MEMBERS TO L/120

COLD-FORMED METAL FRAMING NOTES

1. MINIMUM MEMBER MATERIAL THICKNESS IS 16 GA UNLESS NOTED OTHERWISE.

2. FIELD CUTTING OF MEMBERS SHALL BE PERFORMED BY SHEARING OR SAWING. TORCH CUTTING IS NOT ACCEPTABLE.

3. WHEN COLD-FORMED STUDS ARE TO BE USED FOR TRUSS, RAFTER, OR HEADER APPLICATIONS, STUDS SHALL BE UN-PUNCHED THROUGH THE WEB. IT IS THE RESPONSIBILITY OF THE CONTRACTOR TO SPECIFY UN-PUNCHED STUDS WHEN ORDERING MATERIALS.

4. FIELD-INSTALLED HOLES ARE NOT PERMITTED IN MEMBERS UNLESS INDICATED IN DRAWINGS.

5. THE CONTRACTOR IS SOLELY RESPONSIBLE FOR ERECTION BRACING.

6. MINIMUM SCREW SPACING AND EDGE DISTANCE IS 3/4" UNLESS NOTED OTHERWISE.

7. THE FOLLOWING SHALL BE USED FOR POWDER-ACTUATED FASTENERS IN STEEL UNLESS NOTED OTHERWISE:
   MINIMUM EDGE DISTANCE = 1/2"
   MINIMUM FASTENER SPACING = 1"

8. THE FOLLOWING SHALL BE USED FOR POWDER-ACTUATED FASTENERS IN CONCRETE UNLESS NOTED OTHERWISE:
   MINIMUM EDGE DISTANCE = 3"
   MINIMUM FASTENER SPACING = 4"

9. MINIMUM WELD THROAT THICKNESS EQUALS THE BASE METAL THICKNESS OF THE THINNEST CONNECTED MATERIAL UNLESS NOTED OTHERWISE.

10. TOUCH-UP WELDS WITH GALVANIZING REPAIR PAINT.

S-001_ABBREVIATIONS LEGEND

ADJ	ADJACENT	EXT	EXTERIOR	PE	PROFESSIONAL ENGINEER
L	ANGLE	EOD	EDGE OF DECK	PERP	PERPENDICULAR
APPROX	APPROXIMATE	EOS	EDGE OF SLAB	PLF	POUNDS PER LINEAL FOOT
ARCH	ARCHITECT ARCHITECTURAL	FD	FLOOR DRAIN	PSF	POUNDS PER SQUARE FOOT
		FDN	FOUNDATION		
B/	BOTTOM OF	FTG	FOOTING	PSI	POUNDS PER SQUARE INCH
BLDG	BUILDING	GA	GAUGE		
BRG	BEARING	GALV	GALVANIZED		
BP	BASE PLATE	HSS	HOLLOW STEEL SECTION	PCF	POUNDS PER CUBIC FOOT
CANT	CANTILEVER	HORIZ	HORIZONTAL		
CJ	CONTROL, CONTRACTION, CONSTRUCTION JOINT	HI	HIGH	PC	PRECAST
		HP	HIGH POINT	PSL	PARALLEL STRAND LUMBER
		HVAC	HEATING/VENTILATING/		
CMU	CONCRETE MASONRY UNIT(S)	INFO	INFORMATION	R	RADIUS
		INT	INTERIOR	RD	ROOF DRAIN
CONC	CONCRETE	INV	INVERT	RDP	REGISTERED DESIGN PROFESSIONAL
CONT	CONTINUOUS	K	KIPS		
COL	COLUMN	LG	LONG	REQD	REQUIRED
CFMF	COLD-FORMED METAL FRAMING	LLH	LONG LEG HORIZONTAL	REINF	REINFORCING OR REINFORCED
		LLV	LONG LEG VERTICAL		
COORD	COORDINATE	LOC	LOCATION	REV	REVISION OR REVISED
DIA	DIAMETER	LW	LIGHT WEIGHT	RO	ROUGH OPENING
DIM	DIMENSION	LVL	LAMINATED VENEER LUMBER	SIM	SIMILAR
DN	DOWN			SPA	SPACE
do	DITTO	LO	LOW	STD	STANDARD
DWG	DRAWING	MANUF	MANUFACTURER	SF	SQUARE FEET
EA	EACH	MAX	MAXIMUM	SS	STAINLESS STEEL
EF	EACH FACE	MECH	MECHANICAL	STL	STEEL
EJ	EXPANSION JOINT	MIN	MINIMUM	SQ	SQUARE
ELEC	ELECTRICAL	MISC	MISCELLANEOUS	T/	TOP OF
EL	ELEVATION	MO	MASONRY OPENING	TYP	TYPICAL
ELEV	ELEVATOR	NA	NOT APPLICABLE	UNO	UNLESS NOTED OTHERWISE
ENGR	ENGINEER	NIC	NOT IN CONTRACT		
EMBD	EMBEDDED	NOM	NOMINAL	VERT	VERTICAL
EQ	EQUAL	NW	NORMAL WEIGHT	VIF	VERIFY IN FIELD
EQUIP	EQUIPMENT	OC	ON CENTER	W/	WITH
ES	EACH SIDE	OD	OUTSIDE DIAMETER	WP	WORK POINT
EW	EACH WAY	OPNG	OPENING	WWR	WELDED WIRE REINFORCEMENT
EXIST	EXISTING	OPP	OPPOSITE		
		PAF	POWDER ACTUATED FASTENER	WCJ	WALL CONTROL OR CONSTRUCTION JOINT

NEW YORK STATE OF OPPORTUNITY. Office of General Services

DESIGN & CONSTRUCTION

CONSULTANT:

LaBella
Powered by partnership.

RYAN BIGGS
CLARK DAVIS
ENGINEERING & SURVEYING

WARNING:
THE ALTERATION OF THIS MATERIAL IN ANY WAY, UNLESS DONE UNDER THE DIRECTION OF A COMPARABLE PROFESSIONAL, I.E. ARCHITECT FOR AN ARCHITECT, ENGINEER FOR AN ENGINEER OR LANDSCAPE ARCHITECT FOR A LANDSCAPE ARCHITECT, IS A VIOLATION OF THE NEW YORK STATE EDUCATION LAW AND/OR REGULATIONS AND IS A CLASS 'A' MISDEMEANOR.

CONTRACT: CONSTRUCTION

TITLE: PROVIDE SUB-HEADQUARTERS BUILDING

LOCATION: DOT REGION 8, DUTCHESS COUNTY
205 LIME KILN RD.
EAST FISHKILL, NEW YORK

CLIENT: NEW YORK STATE DEPARTMENT OF TRANSPORTATION

MARK	DATE	DESCRIPTION
	10/17/2019	BID DOCUMENTS

PROJECT NUMBER: 45552-C

DESIGNED BY: JLD

DRAWN BY: RMS

FIELD CHECK:

APPROVED:

SHEET TITLE: NOTES

DRAWING NUMBER: S-002

3/23/2020 4:01:59 PM
C:\Users\RShepherd\Documents\1755-FISHKILL_DOT-CENTRAL-2019_rshepherd@ryanbiggs.com.rvt
36x24 PLOT SHEET

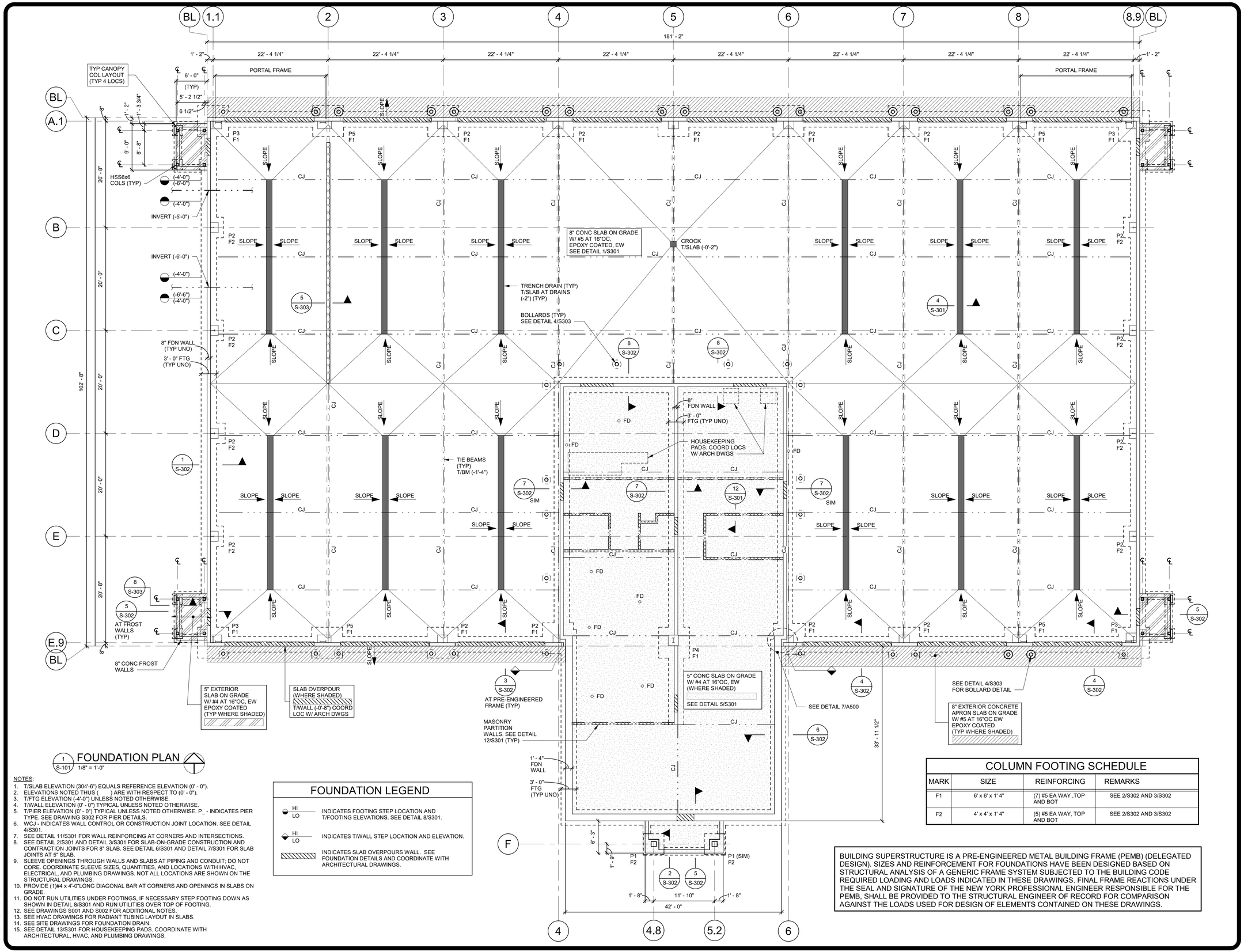

1 S-101 FOUNDATION PLAN 1/8" = 1'-0"

NOTES:

1. T/SLAB ELEVATION (304'-6") EQUALS REFERENCE ELEVATION (0' - 0").
2. ELEVATIONS NOTED THUS ( ) ARE WITH RESPECT TO (0' - 0").
3. T/FTG ELEVATION (-4'-0") UNLESS NOTED OTHERWISE.
4. T/WALL ELEVATION (0' - 0") TYPICAL UNLESS NOTED OTHERWISE.
5. T/PIER ELEVATION (0' - 0") TYPICAL UNLESS NOTED OTHERWISE. P_ - INDICATES PIER TYPE. SEE DRAWING S302 FOR PIER DETAILS.
6. W/CJ - INDICATES WALL CONTROL OR CONSTRUCTION JOINT LOCATION. SEE DETAIL 4/S301.
7. SEE DETAIL 11/S301 FOR WALL REINFORCING AT CORNERS AND INTERSECTIONS.
8. SEE DETAIL 2/S301 AND DETAIL 3/S301 FOR SLAB-ON-GRADE CONSTRUCTION AND CONTRACTION JOINTS FOR 8" SLAB. SEE DETAIL 6/S301 AND DETAIL 7/S301 FOR SLAB JOINTS AT 5" SLAB.
9. SLEEVE OPENINGS THROUGH WALLS AND SLABS AT PIPING AND CONDUIT; DO NOT CORE. COORDINATE SLEEVE SIZES, QUANTITIES, AND LOCATIONS WITH HVAC, ELECTRICAL, AND PLUMBING DRAWINGS. NOT ALL LOCATIONS ARE SHOWN ON THE STRUCTURAL DRAWINGS.
10. PROVIDE (1)#4 x 4'-0"LONG DIAGONAL BAR AT CORNERS AND OPENINGS IN SLABS ON GRADE.
11. DO NOT RUN UTILITIES UNDER FOOTINGS, IF NECESSARY STEP FOOTING DOWN AS SHOWN IN DETAIL 8/S301 AND RUN UTILITIES OVER TOP OF FOOTING.
12. SEE DRAWINGS S001 AND S002 FOR ADDITIONAL NOTES.
13. SEE HVAC DRAWINGS FOR RADIANT TUBING LAYOUT IN SLABS.
14. SEE SITE DRAWINGS FOR FOUNDATION DRAIN.
15. SEE DETAIL 13/S301 FOR HOUSEKEEPING PADS. COORDINATE WITH ARCHITECTURAL, HVAC, AND PLUMBING DRAWINGS.

FOUNDATION LEGEND

HI / LO	INDICATES FOOTING STEP LOCATION AND T/FOOTING ELEVATIONS. SEE DETAIL 8/S301.
HI / LO	INDICATES T/WALL STEP LOCATION AND ELEVATION.
	INDICATES SLAB OVERPOURS WALL. SEE FOUNDATION DETAILS AND COORDINATE WITH ARCHITECTURAL DRAWINGS.

COLUMN FOOTING SCHEDULE

MARK	SIZE	REINFORCING	REMARKS
F1	6' x 6' x 1' 4"	(7) #5 EA WAY ,TOP AND BOT	SEE 2/S302 AND 3/S302
F2	4' x 4' x 1' 4"	(5) #5 EA WAY, TOP AND BOT	SEE 2/S302 AND 3/S302

BUILDING SUPERSTRUCTURE IS A PRE-ENGINEERED METAL BUILDING FRAME (PEMB) (DELEGATED DESIGN). SIZES AND REINFORCEMENT FOR FOUNDATIONS HAVE BEEN DESIGNED BASED ON STRUCTURAL ANALYSIS OF A GENERIC FRAME SYSTEM SUBJECTED TO THE BUILDING CODE REQUIRED LOADING AND LOADS INDICATED IN THESE DRAWINGS. FINAL FRAME REACTIONS UNDER THE SEAL AND SIGNATURE OF THE NEW YORK PROFESSIONAL ENGINEER RESPONSIBLE FOR THE PEMB, SHALL BE PROVIDED TO THE STRUCTURAL ENGINEER OF RECORD FOR COMPARISON AGAINST THE LOADS USED FOR DESIGN OF ELEMENTS CONTAINED ON THESE DRAWINGS.

3/23/2020 4:02:15 PM
C:\Users\RShepherd\Documents\11755-RSHKILL_DOT-CENTRAL-2019_rshepherd@yrarbiggs.com.rvt
36x24 PLOT SHEET

NEW YORK STATE OF OPPORTUNITY. Office of General Services
DESIGN & CONSTRUCTION

CONSULTANT:

LaBella Powered by partnership.

RYAN BIGGS CLARK DAVIS ENGINEERING & SURVEYING

WARNING:
THE ALTERATION OF THIS MATERIAL IN ANY WAY, UNLESS DONE UNDER THE DIRECTION OF A COMPARABLE PROFESSIONAL, I.E. ARCHITECT FOR AN ARCHITECT, ENGINEER FOR AN ENGINEER OR LANDSCAPE ARCHITECT FOR A LANDSCAPE ARCHITECT, IS A VIOLATION OF THE NEW YORK STATE EDUCATION LAW AND/OR REGULATIONS AND IS A CLASS 'A' MISDEMEANOR.

STATE OF NEW YORK · JAMES L. DAVIS · REGISTERED PROFESSIONAL ENGINEER

CONTRACT: CONSTRUCTION

TITLE: PROVIDE SUB-HEADQUARTERS BUILDING

LOCATION: DOT REGION 8, DUTCHESS COUNTY 205 LIME KILN RD. EAST FISHKILL, NEW YORK

CLIENT: NEW YORK STATE DEPARTMENT OF TRANSPORTATION

MARK	DATE	DESCRIPTION
	10/17/2019	BID DOCUMENTS

PROJECT NUMBER: 45552-C

DESIGNED BY: JLD

DRAWN BY: RMS

FIELD CHECK:

APPROVED:

SHEET TITLE: FOUNDATION PLAN

DRAWING NUMBER: S-101

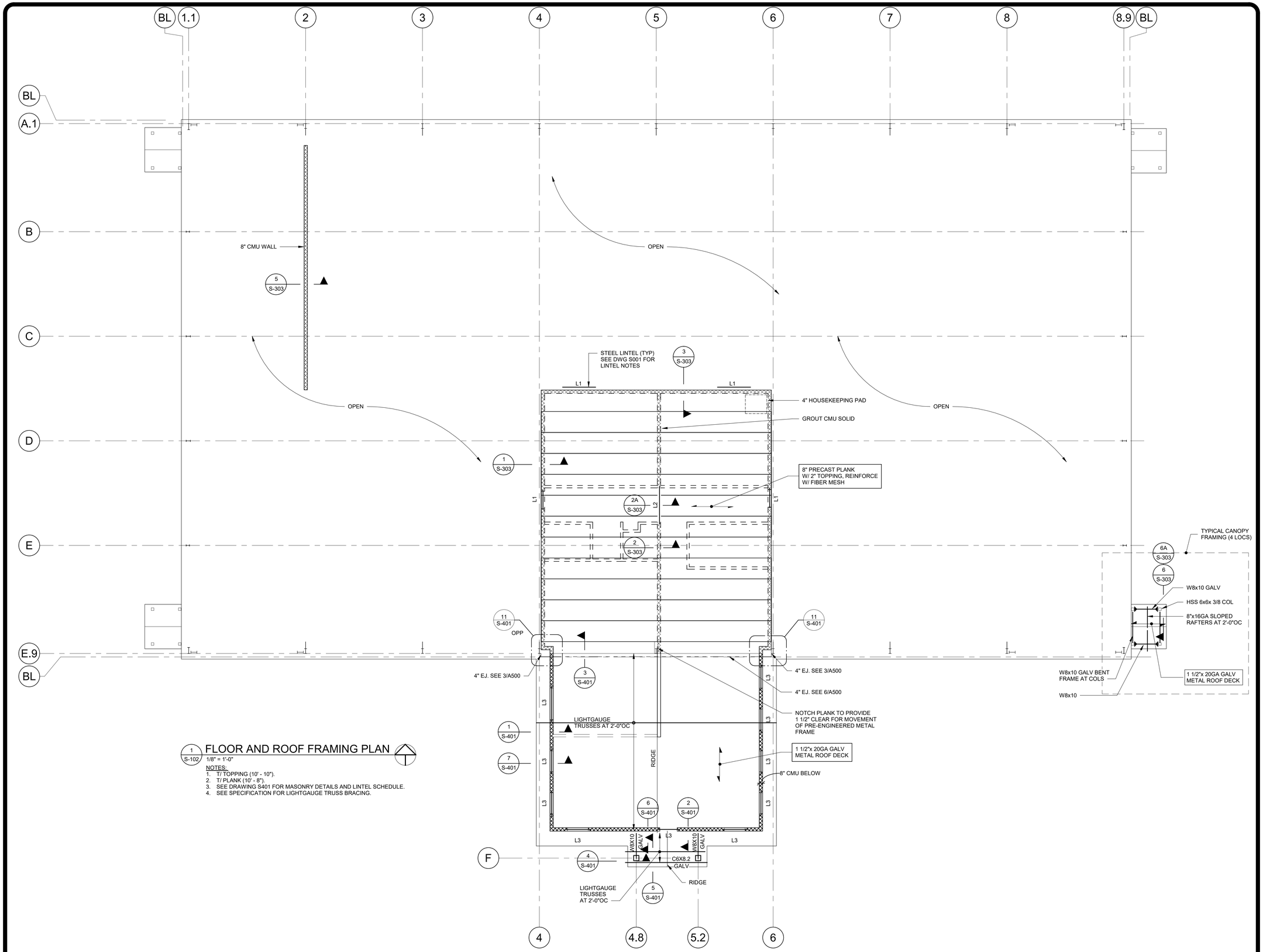

1 S-102 FLOOR AND ROOF FRAMING PLAN

1/8" = 1'-0"

NOTES:
1. T/ TOPPING (10' - 10").
2. T/ PLANK (10' - 8").
3. SEE DRAWING S401 FOR MASONRY DETAILS AND LINTEL SCHEDULE.
4. SEE SPECIFICATION FOR LIGHTGAUGE TRUSS BRACING.

NEW YORK STATE OF OPPORTUNITY. Office of General Services

DESIGN & CONSTRUCTION

CONSULTANT:

LaBella Powered by partnership.

RYAN BIGGS CLARK DAVIS ENGINEERING & SURVEYING

WARNING:

THE ALTERATION OF THIS MATERIAL IN ANY WAY, UNLESS DONE UNDER THE DIRECTION OF A COMPARABLE PROFESSIONAL, I.E. ARCHITECT FOR AN ARCHITECT, ENGINEER FOR AN ENGINEER OR LANDSCAPE ARCHITECT FOR A LANDSCAPE ARCHITECT, IS A VIOLATION OF THE NEW YORK STATE EDUCATION LAW AND/OR REGULATIONS AND IS A CLASS 'A' MISDEMEANOR.

STATE OF NEW YORK JAMIE L. DAVIS No. 072895 LICENSED PROFESSIONAL ENGINEER

CONTRACT: CONSTRUCTION

TITLE: PROVIDE SUB-HEADQUARTERS BUILDING

LOCATION: DOT REGION 8, DUTCHESS COUNTY 205 LIME KILN RD. EAST FISHKILL, NEW YORK

CLIENT: NEW YORK STATE DEPARTMENT OF TRANSPORTATION

MARK	DATE	DESCRIPTION
	10/17/2019	BID DOCUMENTS

PROJECT NUMBER:	45552-C
DESIGNED BY:	JLD
DRAWN BY:	RMS
FIELD CHECK:	
APPROVED:	

SHEET TITLE: FLOOR AND ROOF FRAMING PLAN

DRAWING NUMBER: S-102

3/23/2020 4:02:24 PM
C:\Users\RShepherd\Documents\11755-FISHKILL_DOT-CENTRAL-2019_rshepherd@ryanbiggs.com.rvt
36x24 PLOT SHEET

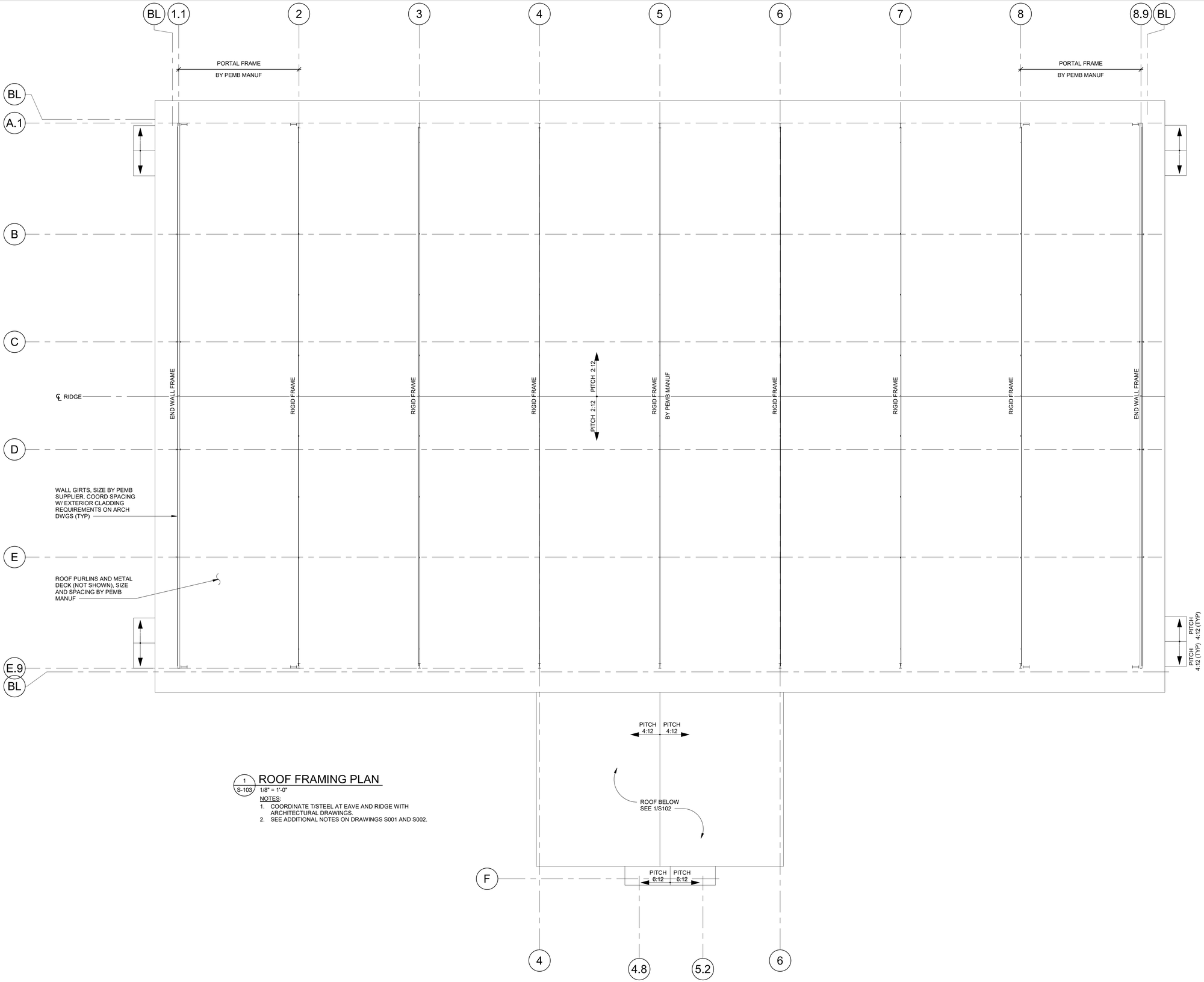

1 S-103 ROOF FRAMING PLAN

1/8" = 1'-0"

NOTES:

1. COORDINATE T/STEEL AT EAVE AND RIDGE WITH ARCHITECTURAL DRAWINGS.
2. SEE ADDITIONAL NOTES ON DRAWINGS S001 AND S002.

NEW YORK STATE OF OPPORTUNITY. Office of General Services

DESIGN & CONSTRUCTION

CONSULTANT:

LaBella Powered by partnership.

RYAN BIGGS CLARK DAVIS ENGINEERING & SURVEYING

WARNING:

THE ALTERATION OF THIS MATERIAL IN ANY WAY, UNLESS DONE UNDER THE DIRECTION OF A COMPARABLE PROFESSIONAL, I.E. ARCHITECT FOR AN ARCHITECT, ENGINEER FOR AN ENGINEER OR LANDSCAPE ARCHITECT FOR A LANDSCAPE ARCHITECT, IS A VIOLATION OF THE NEW YORK STATE EDUCATION LAW AND/OR REGULATIONS AND IS A CLASS 'A' MISDEMEANOR.

STATE OF NEW YORK JAMIE L. DAVIS No. 072935 LICENSED PROFESSIONAL ENGINEER

CONTRACT: CONSTRUCTION

TITLE: PROVIDE SUB-HEADQUARTERS BUILDING

LOCATION: DOT REGION 8, DUTCHESS COUNTY
205 LIME KILN RD.
EAST FISHKILL, NEW YORK

CLIENT: NEW YORK STATE DEPARTMENT OF TRANSPORTATION

MARK	DATE	DESCRIPTION
	10/17/2019	BID DOCUMENTS

PROJECT NUMBER:	45552-C
DESIGNED BY:	JLD
DRAWN BY:	RMS
FIELD CHECK:	
APPROVED:	

SHEET TITLE: ROOF FRAMING PLAN

DRAWING NUMBER: S-103

3/23/2020 4:02:32 PM
C:\Users\RShepherd\Documents\11755-FISHKILL_DOT-CENTRAL-2019_rshepherd@ryanbiggs.com.rvt
36x24 PLOT SHEET

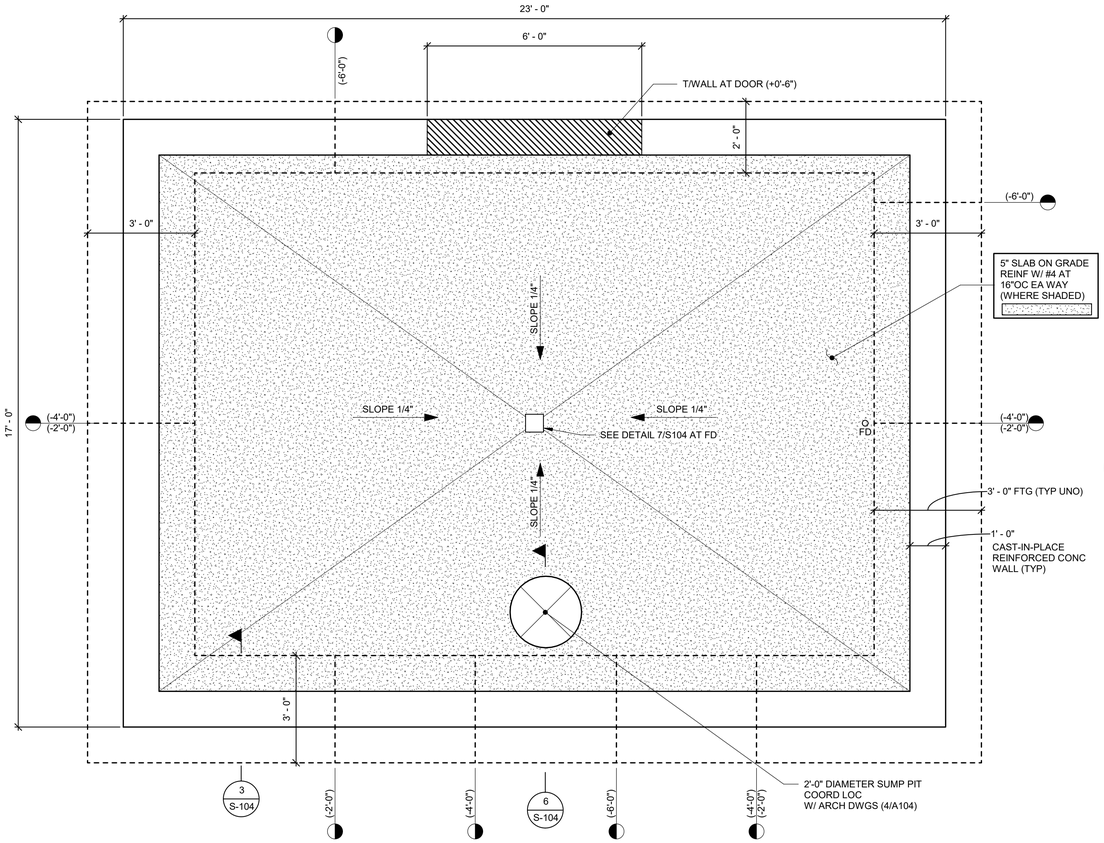

1 S-104 FOUNDATION PLAN
1/2" = 1'-0"

NOTES:
1. SEE FOUNDATION NOTES ON DRAWING S101.
2. T/SLAB ELEVATION (302.0') EQUALS REFERENCE ELEVATION (0'-0").
3. T/FTG ELEVATION (-4'-0") UNLESS NOTED OTHERWISE.
4. ELEVATIONS NOTED THUS ( ) ARE WITH RESPECT TO 0'-0".

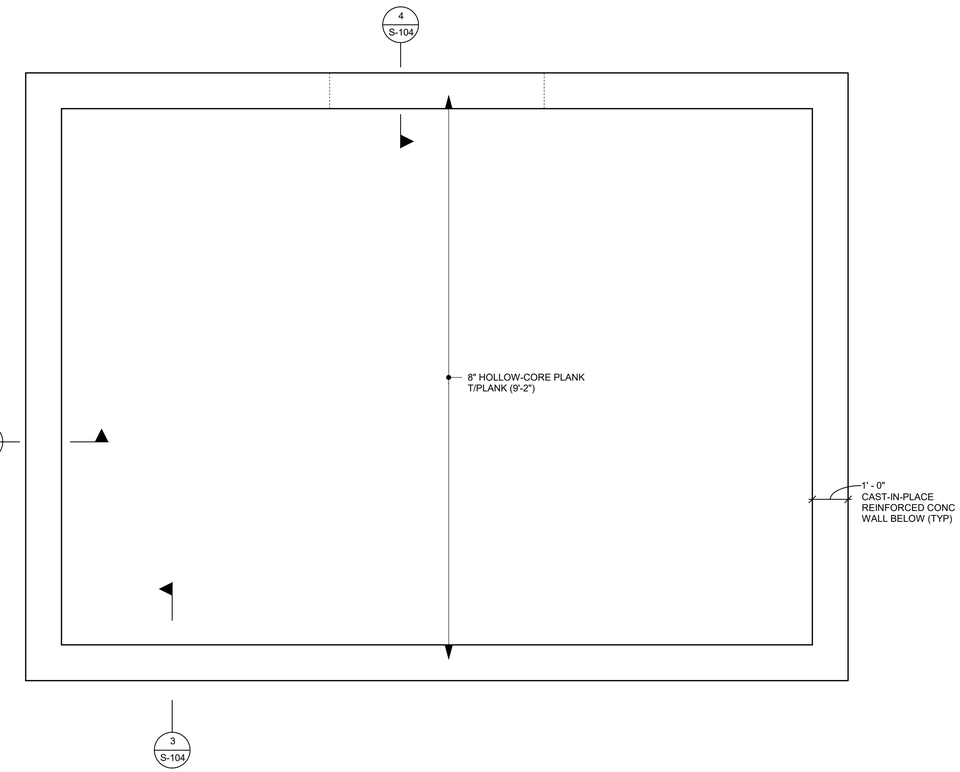

2 S-104 ROOF FRAMING PLAN
1/2" = 1'-0"

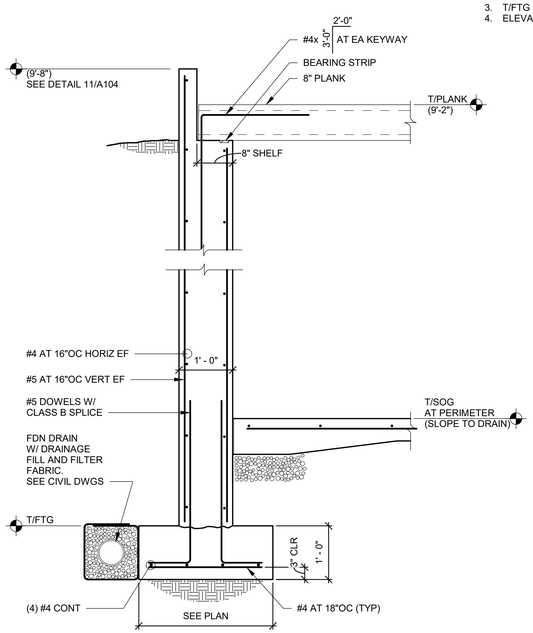

3 S-104 SECTION AT FOUNDATION WALL
3/4" = 1'-0"

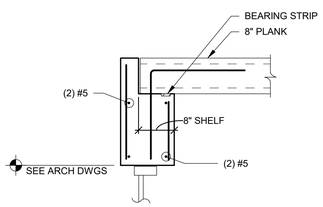

4 S-104 SECTION
3/4" = 1'-0"

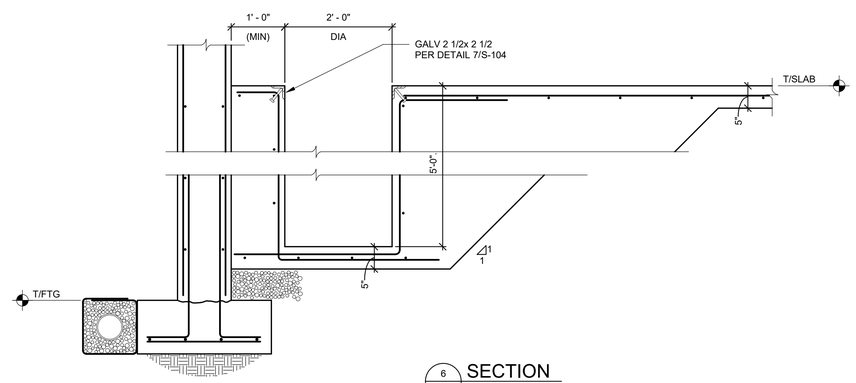

6 S-104 SECTION
3/4" = 1'-0"

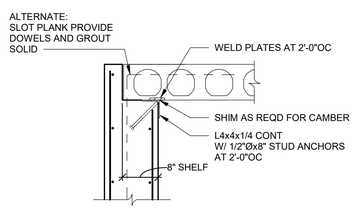

5 S-104 SECTION
3/4" = 1'-0"

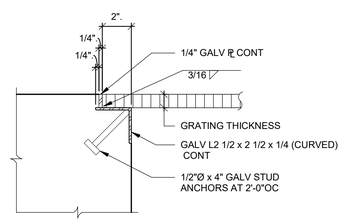

7 S-104 TYPICAL EDGE ANGLE FOR PLATE OR GRATING COVER
NOT TO SCALE

NEW YORK STATE OF OPPORTUNITY. Office of General Services
DESIGN & CONSTRUCTION

CONSULTANT:
LaBella Powered by partnership.
RYAN BIGGS CLARK DAVIS ENGINEERING & SURVEYING

WARNING:
THE ALTERATION OF THIS MATERIAL IN ANY WAY, UNLESS DONE UNDER THE DIRECTION OF A COMPARABLE PROFESSIONAL, I.E. ARCHITECT FOR AN ARCHITECT, ENGINEER FOR AN ENGINEER OR LANDSCAPE ARCHITECT FOR A LANDSCAPE ARCHITECT, IS A VIOLATION OF THE NEW YORK STATE EDUCATION LAW AND/OR REGULATIONS AND IS A CLASS 'A' MISDEMEANOR.

STATE OF NEW YORK · JAMES L. DAVIS · No. 072300 · LICENSED PROFESSIONAL ENGINEER

CONTRACT: CONSTRUCTION

TITLE: PROVIDE SUB-HEADQUARTERS BUILDING

LOCATION: DOT REGION 8, DUTCHESS COUNTY
205 LIME KILN RD.
EAST FISHKILL, NEW YORK

CLIENT: NEW YORK STATE DEPARTMENT OF TRANSPORTATION

MARK	DATE	DESCRIPTION
	10/17/2019	BID DOCUMENTS

PROJECT NUMBER: 45552-C
DESIGNED BY: JLD
DRAWN BY: RMS
FIELD CHECK:
APPROVED:

SHEET TITLE: PUMPHOUSE PLANS AND DETAILS

DRAWING NUMBER: S-104

3/23/2020 4:02:45 PM
C:\Users\RShepherd\Documents\11755-FISHKILL_DOT-CENTRAL-2019_rshepherd@ryanbiggs.com.rvt
36x24 PLOT SHEET

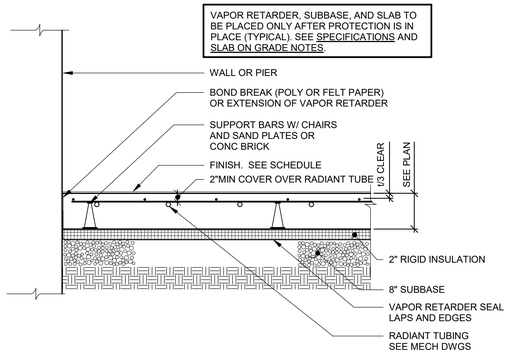

1 S-301 SLAB ON GRADE
TYPICAL EDGE SECTION - GARAGE
SCALE: 3/4" = 1'-0"

DOWEL SIZE AND SPACING FOR TAPERED PLATE DOWELS		
SLAB DEPTH INCHES, (mm)	DOWEL DIMS INCHES, (mm)	DOWEL SPA CENTER-TO-CENTER, INCHES, (mm)
7 TO 8 (175 TO 200)	1/2x2 1/2x12 (12x60x300)	18 (450)

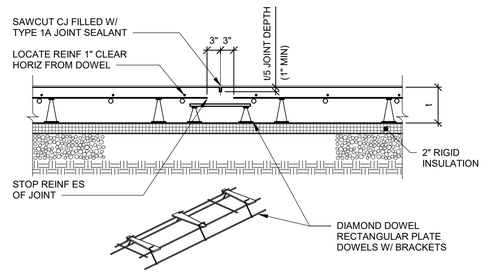

2 S-301 SLAB ON GRADE
TYPICAL CONTRACTION JOINT - GARAGE
SCALE: 3/4" = 1'-0"

DOWEL SIZE AND SPACING FOR DIAMOND-SHAPED LOAD PLATES		
SLAB DEPTH INCHES, (mm)	DIAMOND LOAD PLATE DIMS INCHES, (mm)	DIAMOND LOAD PLATE SPA CENTER-TO-CENTER, INCHES, (mm)
7 TO 8 (175 TO 200)	3/4x4 1/2x4 1/2 (10x115x115)	18 (450)

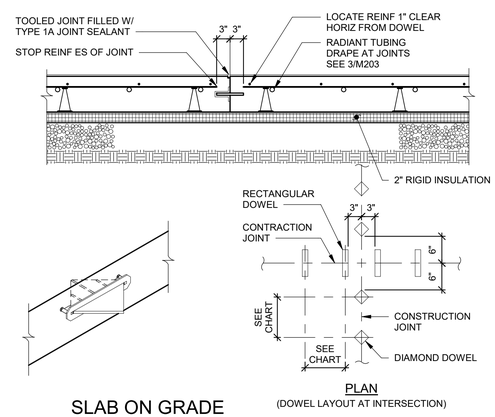

3 S-301 SLAB ON GRADE
TYPICAL CONSTRUCTION JOINT - GARAGE
SCALE: 3/4" = 1'-0"

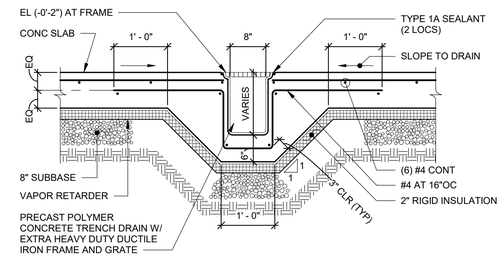

4 S-301 SLAB SECTION AT TRENCH DRAIN
SCALE: 3/4" = 1'-0"

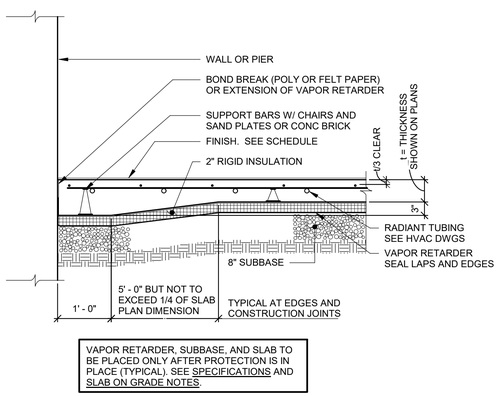

5 S-301 SLAB ON GRADE
TYPICAL EDGE SECTION - OFFICE
SCALE: 3/4" = 1'-0"

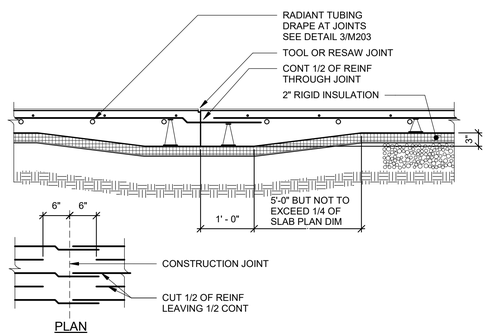

6 S-301 SLAB ON GRADE
TYPICAL CONSTRUCTION JOINT - OFFICE
SCALE: 3/4" = 1'-0"

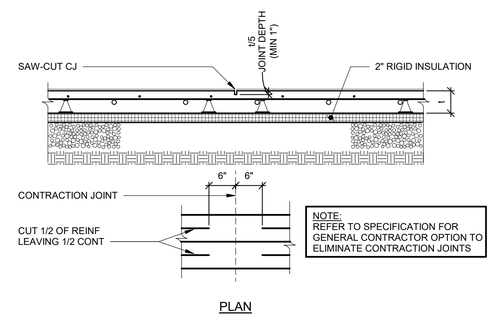

7 S-301 SLAB ON GRADE
TYPICAL CONTRACTION JOINT - OFFICE
SCALE: 3/4" = 1'-0"

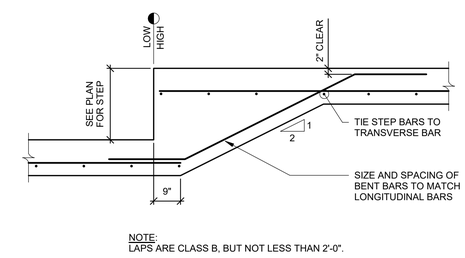

8 S-301 TYPICAL FOOTING STEP DETAIL
SCALE: 1/2" = 1'-0"

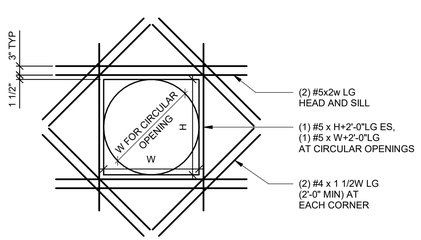

9 S-301 REINFORCEMENT AT WALL OPENING
SCALE: 1/2" = 1'-0"

NOTES:
1. THIS DETAIL APPLIES WHERE OPENING INTERRUPTS NO MORE THAN TWO VERTICAL OR HORIZONTAL REINFORCING BARS. NOTIFY DIRECTOR'S REPRESENTATIVE OF ANY OPENINGS NOT SHOWN IN STRUCTURAL DRAWINGS THAT INTERRUPT MORE THAN TWO VERTICAL OR HORIZONTAL REINFORCING BARS.
2. PROVIDE REINFORCEMENT SHOWN FOR EACH LAYER OF WALL REINFORCEMENT.
3. PIPE CLUSTERS (MULTIPLE PIPES) SHALL BE CONSIDERED ONE CONTINUOUS OPENING.
4. SHOW OPENINGS IN WALL ELEVATIONS IN REINFORCING SHOP DRAWINGS.

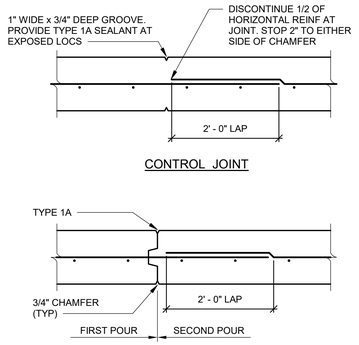

10 S-301 FOUNDATION WALL CONTROL JOINT
SCALE: 3/4" = 1'-0"

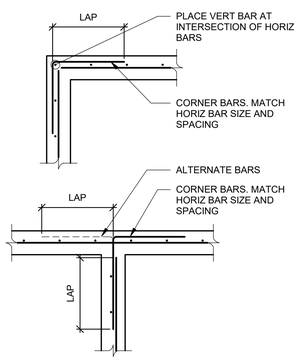

11 S-301 INTERSECTION REINFORCEMENT
SCALE: 1/2" = 1'-0"

NOTE:
LAPS ARE CLASS B, BUT NOT LESS THAN 2' - 0".

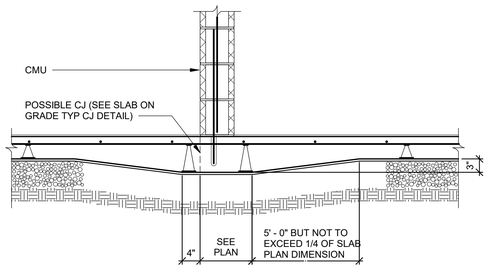

12 S-301 SECTION AT THICKENED SLAB (WALL)
SCALE: 3/4" = 1'-0"

NOTE:
DRILL AND ADHESIVE GROUT BARS 6" MINIMUM INTO SLAB ON GRADE.

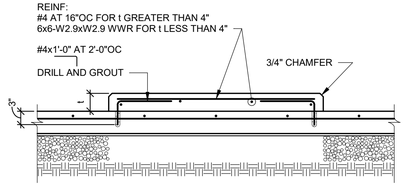

13 S-301 HOUSEKEEPING PAD DETAIL
NOT TO SCALE

NOTE:
COORDINATE PAD THICKNESSES (t) AND LOCATIONS WITH ACCEPTED SHOP DRAWINGS AND SUBMITTALS.

3/23/2020 4:02:54 PM
C:\Users\RShepherd\Documents\11755-FISHKILL_DOT-CENTRAL-2019_rshepherd@ryanbiggs.com.rvt
36x24 PLOT SHEET

NEW YORK STATE OF OPPORTUNITY. Office of General Services
DESIGN & CONSTRUCTION

CONSULTANT:
LaBella Powered by partnership.
RYAN BIGGS CLARK DAVIS ENGINEERING & SURVEYING

WARNING:
THE ALTERATION OF THIS MATERIAL IN ANY WAY, UNLESS DONE UNDER THE DIRECTION OF A COMPARABLE PROFESSIONAL, I.E. ARCHITECT FOR AN ARCHITECT, ENGINEER FOR AN ENGINEER OR LANDSCAPE ARCHITECT FOR A LANDSCAPE ARCHITECT, IS A VIOLATION OF THE NEW YORK STATE EDUCATION LAW AND/OR REGULATIONS AND IS A CLASS 'A' MISDEMEANOR.

STATE OF NEW YORK · JAMES L. DAVIS · LICENSED PROFESSIONAL ENGINEER

CONTRACT:
CONSTRUCTION

TITLE:
PROVIDE SUB-HEADQUARTERS BUILDING

LOCATION:
DOT REGION 8, DUTCHESS COUNTY
205 LIME KILN RD.
EAST FISHKILL, NEW YORK

CLIENT:
NEW YORK STATE DEPARTMENT OF TRANSPORTATION

MARK	DATE	DESCRIPTION
	10/17/2019	BID DOCUMENTS

PROJECT NUMBER:	45552-C
DESIGNED BY:	JLD
DRAWN BY:	CGM
FIELD CHECK:	
APPROVED:	

SHEET TITLE:
FOUNDATION SECTIONS AND DETAILS

DRAWING NUMBER:
S-301

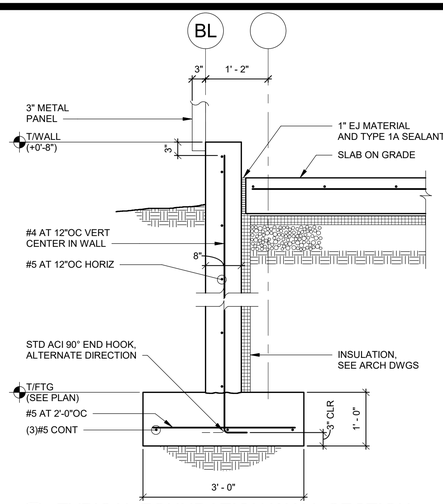

1 S-302 TYPICAL FOUNDATION WALL SECTION
SCALE: 3/4" = 1'-0"
NOTE:
TYPICAL WHERE SLAB DOES NOT OVERPOUR WALL.

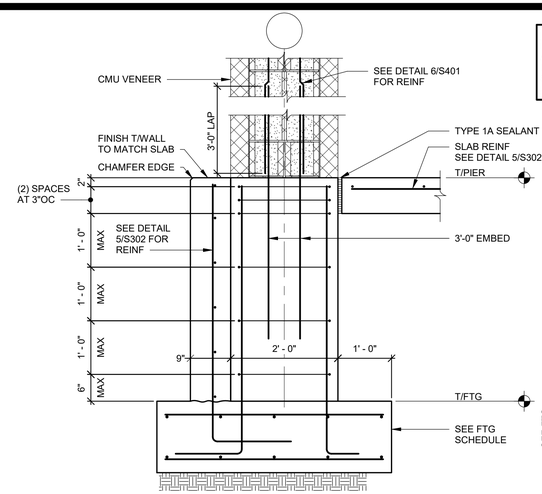

2 S-302 SECTION AT ENTRY CANOPY
SCALE: 3/4" = 1'-0"

NOTE:
PROVIDE SUPPORTS AS REQD TO ACCURATELY PLACE AND HOLD DOWELS IN POSITION PRIOR TO PLACING CONC. SEE SPECIFICATIONS. WET SETTING OF REINF IS NOT PERMITTED.

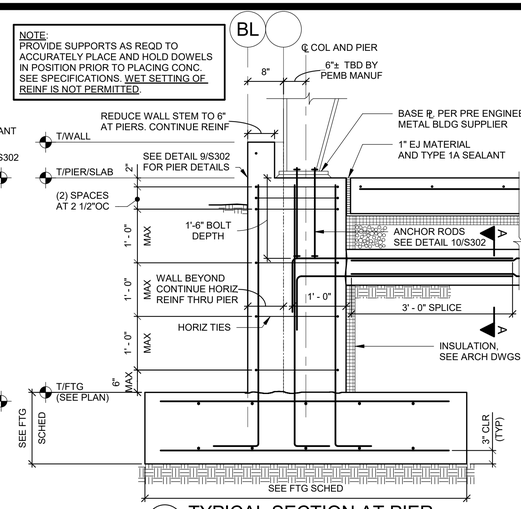

3 S-302 TYPICAL SECTION AT PIER
SCALE: 3/4" = 1'-0"

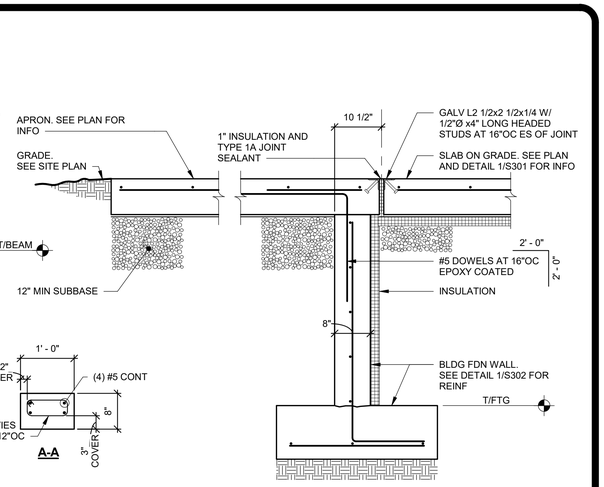

4 S-302 SECTION AT OVERHEAD DOOR
SCALE: 3/4" = 1'-0"
NOTE:
SEE DETAIL 1/A600 FOR ADDITIONAL INFORMATION.

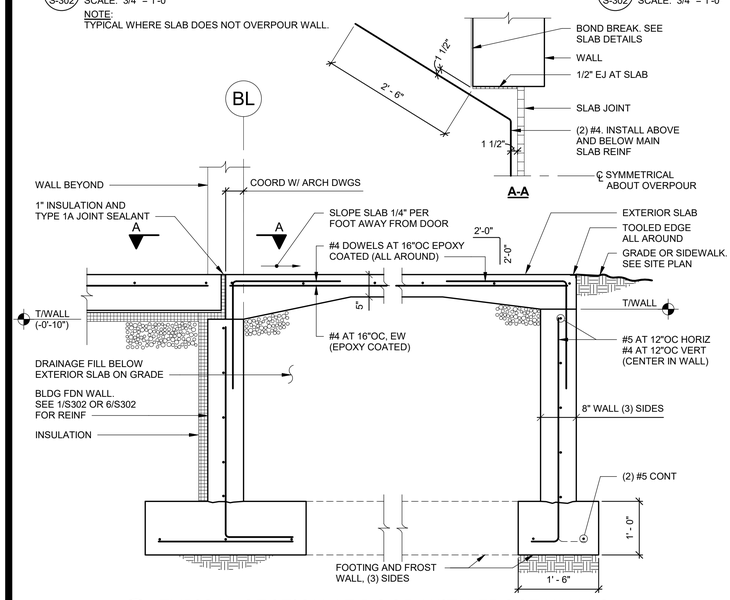

5 S-302 TYPICAL SECTION AT DOOR WITH FROST WALLS
SCALE: 3/4" = 1'-0"
NOTE:
CONTRACTOR'S OPTION TO PLACE MAT FOOTING IN LIEU OF INDIVIDUAL WALL FOOTINGS. REINFORCE MAT WITH #5 AT 16"OC EACH WAY (BOTTOM) AND PROVIDE DRAIN HOLE AT CENTER OF MAT (6"Ø OR 6" SQUARE).

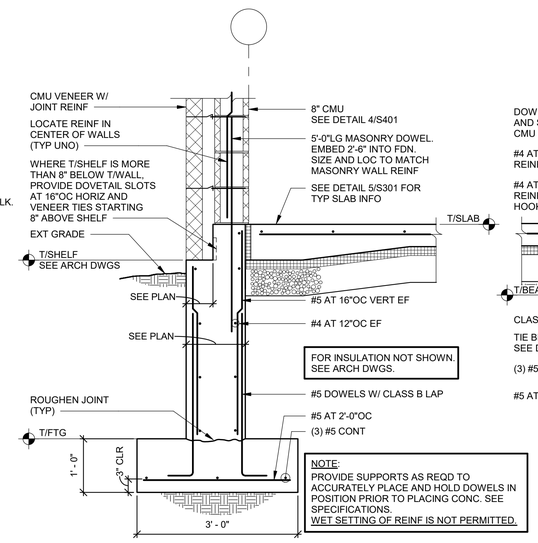

NOTE:
PROVIDE SUPPORTS AS REQD TO ACCURATELY PLACE AND HOLD DOWELS IN POSITION PRIOR TO PLACING CONC. SEE SPECIFICATIONS.
WET SETTING OF REINF IS NOT PERMITTED.

6 S-302 SECTION AT FOUNDATION WALL
SCALE: 3/4" = 1'-0"

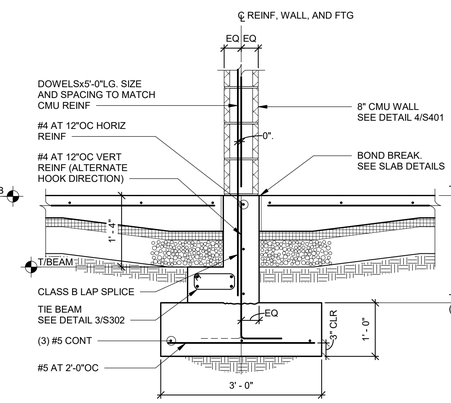

7 S-302 SECTION AT FOUNDATION WALL
SCALE: 3/4" = 1'-0"

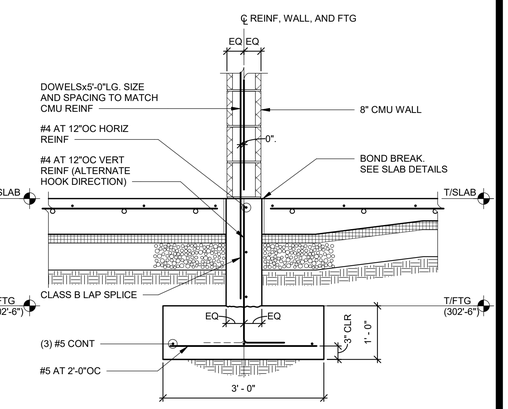

8 S-302 SECTION AT FOUNDATION WALL
SCALE: 3/4" = 1'-0"

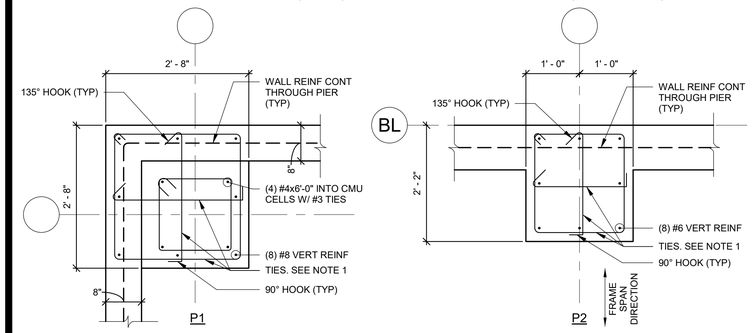

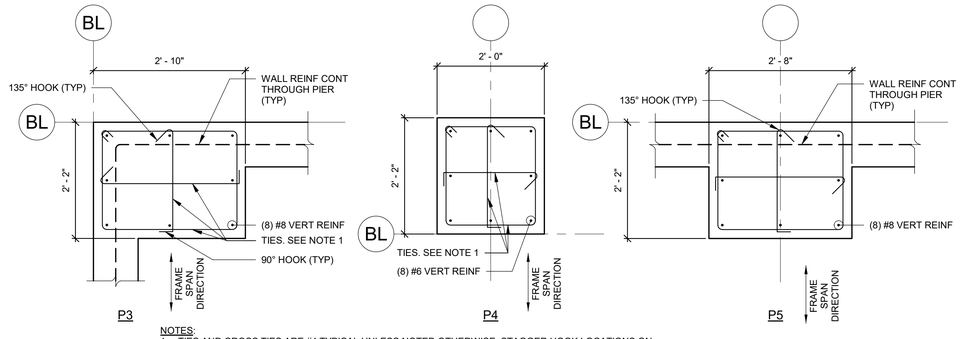

9 S-302 PIER DETAILS
SCALE: 3/4" = 1'-0"

NOTES:
1. TIES AND CROSS TIES ARE #4 TYPICAL UNLESS NOTED OTHERWISE. STAGGER HOOK LOCATIONS ON ALTERNATE TIES. STAGGER 90° HOOK LOCATIONS ON CROSS TIES.
2. SEE DETAIL 3/S-302 FOR TIE/CROSS TIE SPACING AND SECTIONS AT PIERS.
3. CONTINUE WALL REINFORCING THROUGH PIERS.
4. ALL VERTICAL BARS SHALL HAVE ACI 90° HOOK INTO FOOTING AND AT TOP.
5. CONTRACTOR SHALL PROVIDE SUPPORTS AS REQUIRED TO ACCURATELY PLACE RODS IN THE CORRECT LOCATION PRIOR TO PLACING CONCRETE. WET SETTING OF ANCHOR RODS IS NOT PERMITTED.
6. COORDINATE DIMENSIONS WITH APPROVED METAL BUILDING SUBMITTAL.
7. REDUCE WALL STEM TO 6" AT PIERS

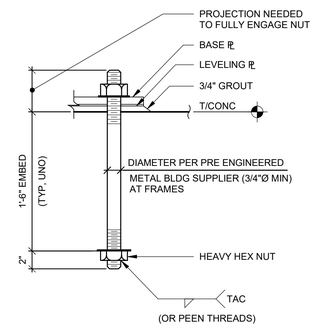

10 S-302 ANCHOR ROD
NOT TO SCALE

3/23/2020 4:03:06 PM
C:\Users\RShepherd\Documents\11755-FISHKILL_DOT-CENTRAL-2019_rshepherd@ryanbiggs.com.rvt
36x24 PLOT SHEET

NEW YORK STATE OF OPPORTUNITY. Office of General Services
DESIGN & CONSTRUCTION

CONSULTANT:
LaBella Powered by partnership.
RYAN BIGGS CLARK DAVIS ENGINEERING & SURVEYING

WARNING:
THE ALTERATION OF THIS MATERIAL IN ANY WAY, UNLESS DONE UNDER THE DIRECTION OF A COMPARABLE PROFESSIONAL, I.E. ARCHITECT FOR AN ARCHITECT, ENGINEER FOR AN ENGINEER OR LANDSCAPE ARCHITECT FOR A LANDSCAPE ARCHITECT, IS A VIOLATION OF THE NEW YORK STATE EDUCATION LAW AND/OR REGULATIONS AND IS A CLASS 'A' MISDEMEANOR.

STATE OF NEW YORK · JAMES L. DAVIS · REGISTERED PROFESSIONAL ENGINEER · 072930

CONTRACT: CONSTRUCTION

TITLE: PROVIDE SUB-HEADQUARTERS BUILDING

LOCATION: DOT REGION 8, DUTCHESS COUNTY, 205 LIME KILN RD., EAST FISHKILL, NEW YORK

CLIENT: NEW YORK STATE DEPARTMENT OF TRANSPORTATION

MARK	DATE	DESCRIPTION
	10/17/2019	BID DOCUMENTS

PROJECT NUMBER:	45552-C
DESIGNED BY:	JLD
DRAWN BY:	RMS
FIELD CHECK:	
APPROVED:	

SHEET TITLE: FOUNDATION SECTIONS AND DETAILS

DRAWING NUMBER: S-302

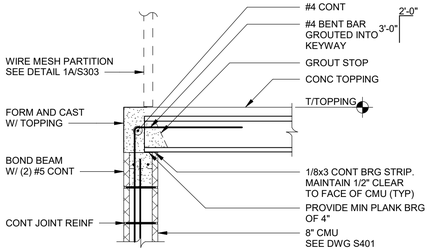

1 S-303 PC PLANK AT BEARING WALL
SCALE: 3/4" = 1'-0"

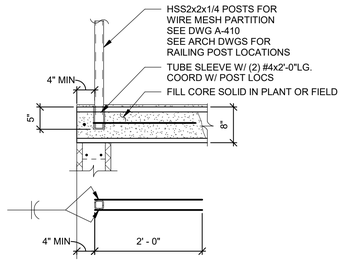

PLAN VIEW

1A S-303 DETAIL
SCALE: 3/4" = 1'-0"

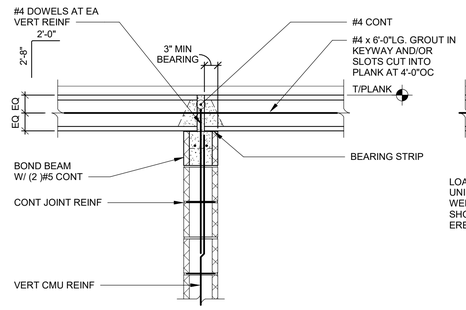

2 S-303 PC PLANK AT BEARING WALL
SCALE: 3/4" = 1'-0"

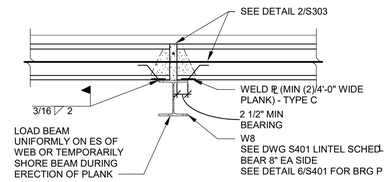

2A S-303 DETAIL
SCALE: 3/4" = 1'-0"

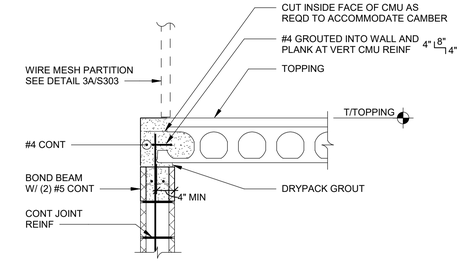

3 S-303 PC PLANK AT NON-BEARING WALL
SCALE: 3/4" = 1'-0"

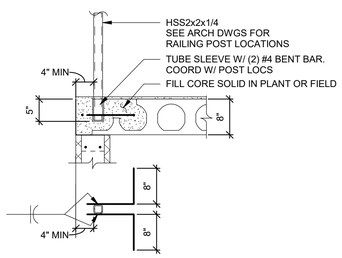

PLAN VIEW

3A S-303 DETAIL
SCALE: 3/4" = 1'-0"

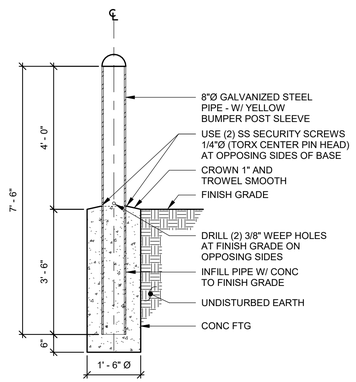

4 S-303 BOLLARD DETIAL
SCALE: 1/2" = 1'-0"

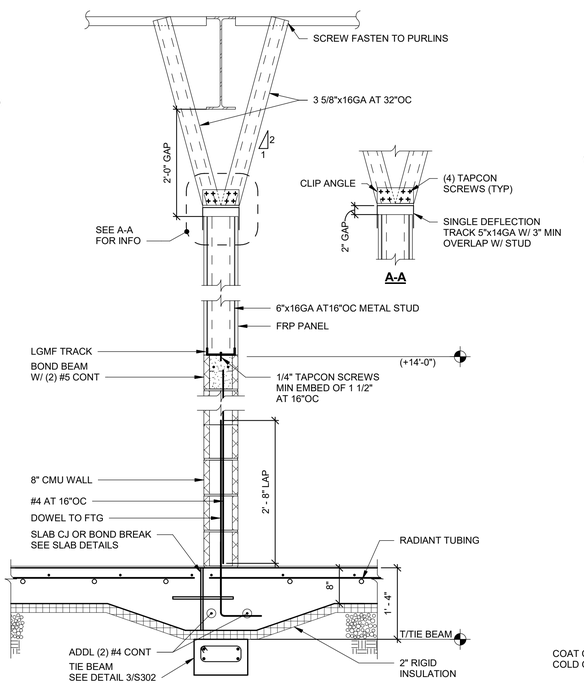

NOTE:
DRILL AND ADHESIVE GROUT BARS 6" MINIMUM INTO SLAB ON GRADE.

5 S-303 SECTION AT WASHBAY WALL
SCALE: 3/4" = 1'-0"

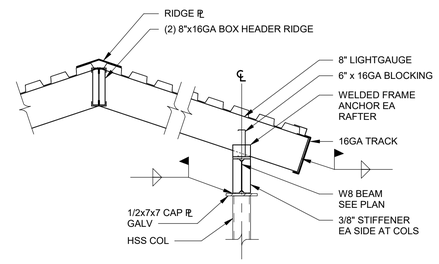

6 S-303 DETAIL
SCALE: 3/4" = 1'-0"

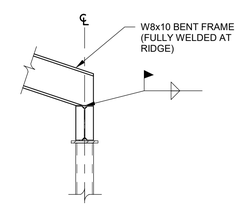

6A S-303 DETAIL
SCALE: 3/4" = 1'-0"

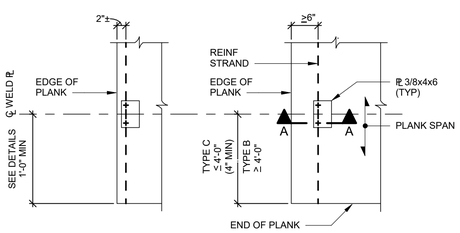

REQUIRED ALLOWABLE LOADS (ASD):		
	SHEAR PARALLEL TO PLANK SPAN (LBS)	SHEAR PERPENDICULAR TO PLANK SPAN (LBS)
TYPE A	2,700	590
TYPE B	2,700	925
TYPE C	800	625

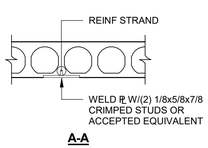

A-A

NOTES:
1. SUBMIT TEST DATA SHOWING COMPLIANCE WITH REQUIRED LOADS.
2. ALLOWABLE LOADS BASED ON 4:1 SAFETY FACTOR.

7 S-303 PRECAST PLANK WELD PLATE DETAILS
NOT TO SCALE

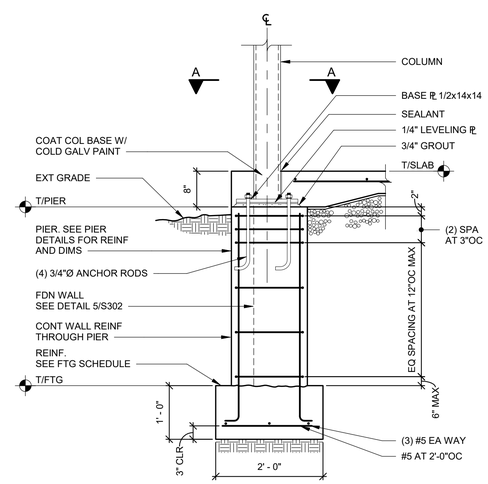

8 S-303 SECTION AT EXTERIOR PIER
SCALE: 3/4" = 1'-0"

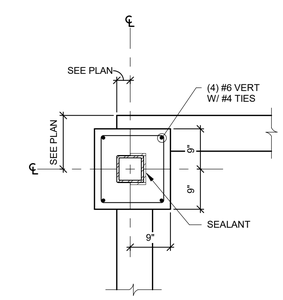

A-A

NEW YORK STATE OF OPPORTUNITY. Office of General Services
DESIGN & CONSTRUCTION

CONSULTANT:
LaBella Powered by partnership.
RYAN BIGGS CLARK DAVIS ENGINEERING & SURVEYING

WARNING:
THE ALTERATION OF THIS MATERIAL IN ANY WAY, UNLESS DONE UNDER THE DIRECTION OF A COMPARABLE PROFESSIONAL, I.E. ARCHITECT FOR AN ARCHITECT, ENGINEER FOR AN ENGINEER OR LANDSCAPE ARCHITECT FOR A LANDSCAPE ARCHITECT, IS A VIOLATION OF THE NEW YORK STATE EDUCATION LAW AND/OR REGULATIONS AND IS A CLASS 'A' MISDEMEANOR.

STATE OF NEW YORK · JAMES R. SHEPHERD · 072390 · LICENSED PROFESSIONAL ENGINEER

CONTRACT:
CONSTRUCTION

TITLE:
PROVIDE SUB-HEADQUARTERS BUILDING

LOCATION:
DOT REGION 8, DUTCHESS COUNTY
205 LIME KILN RD.
EAST FISHKILL, NEW YORK

CLIENT:
NEW YORK STATE DEPARTMENT OF TRANSPORTATION

MARK	DATE	DESCRIPTION
	10/17/2019	BID DOCUMENTS

PROJECT NUMBER:	45552-C
DESIGNED BY:	JRS
DRAWN BY:	KMR
FIELD CHECK:	
APPROVED:	

SHEET TITLE:
SECTIONS

DRAWING NUMBER:
S-303

3/23/2020 4:03:39 PM
C:\Users\RShepherd\Documents\11755-FISHKILL_D07-CENTRAL_2019_ssheperd@ryanbiggs.com.rvt
36x24 PLOT SHEET

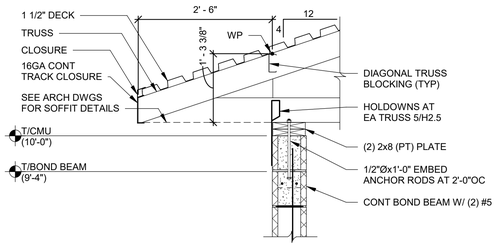

1 S-401 SECTION AT TRUSS BEARING
SCALE: 3/4" = 1'-0"

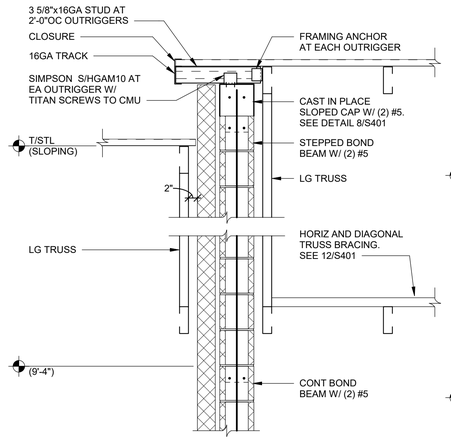

2 S-401 SECTION
SCALE: 3/4" = 1'-0"

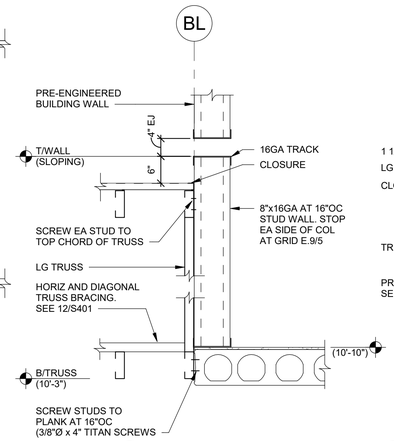

3 S-401 SECTION
SCALE: 3/4" = 1'-0"

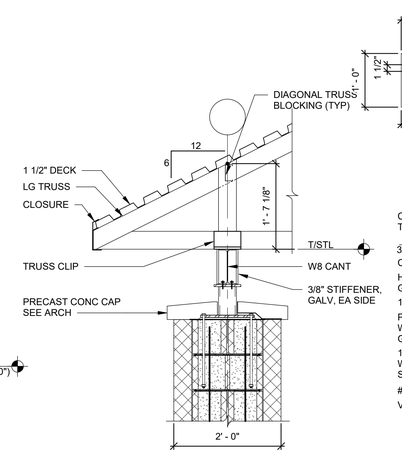

4 S-401 SECTION AT OFFICE ENTRANCE
SCALE: 3/4" = 1'-0"

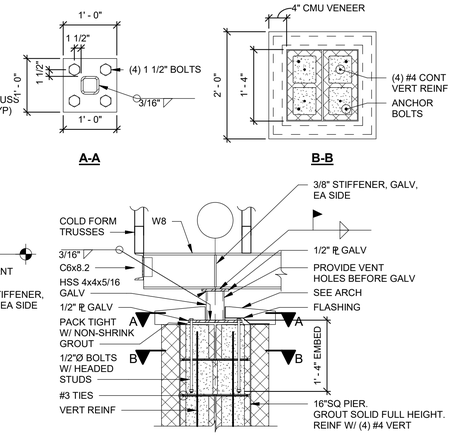

5 S-401 DETAIL AT CANOPY
SCALE: 3/4" = 1'-0"

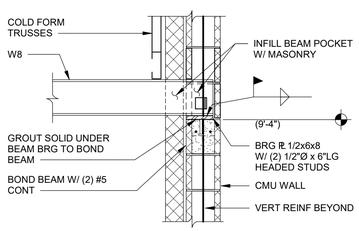

NOTE:
OPTION TO USE THREADED ROD WITH TACK WELDED NUT IN LIEU OF HEADED STUDS.

6 S-401 BEAM BEARING IN MASONRY WALL
SCALE: 3/4" = 1'-0"

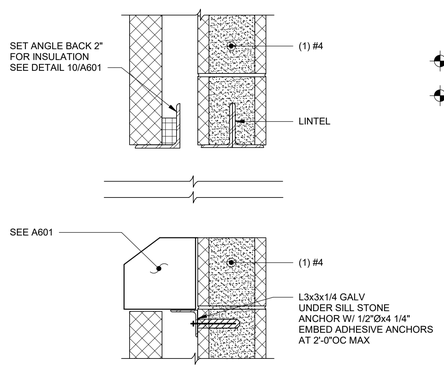

NOTES:
1. SEE PLAN AND LINTEL NOTES FOR LINTEL SIZES.
2. SEE LINTEL NOTES FOR ADDITIONAL INFORMATION.

7 S-401 SECTION
SCALE: 1 1/2" = 1'-0"

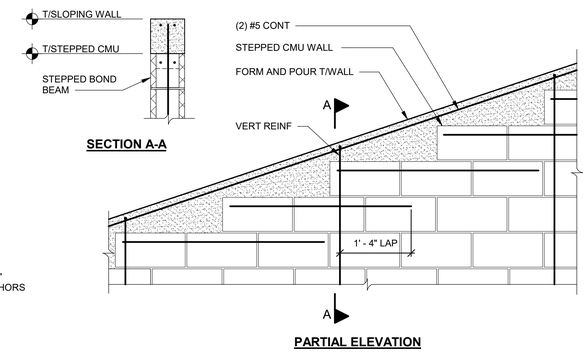

8 S-401 SLOPED MASONRY WALL DETAIL
SCALE: 3/4" = 1'-0"

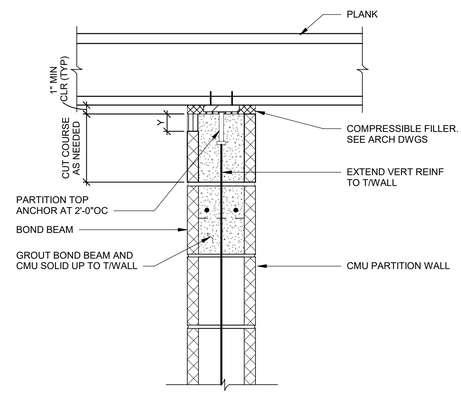

9 S-401 DETAIL AT TOP OF CMU WALL
NOT TO SCALE

NOTE:
Y (SHADED ▥) INDICATES NOTCH FACE SHELL (4" MAXIMUM) AS REQUIRED FOR GROUTING. FILL SOLID WITH MORTAR ABOVE GROUT TO TOP OF CMU.

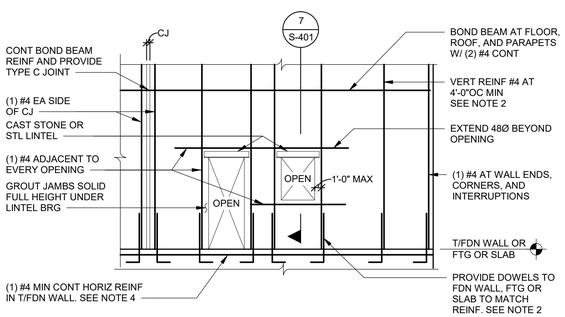

NOTES:
1. REINFORCING SHOWN IS TYPICAL UNLESS NOTED.
2. LAP REINFORCING BARS AS INDICATED IN THE MASONRY NOTES ON S-002.
3. PROVIDE LADDER TYPE HORIZONTAL JOINT REINFORCING AT 16"OC AND AT TOP TWO COURSES UNLESS NOTED OTHERWISE.
4. AT INTERIOR PARTITIONS, WHERE NO FOUNDATION WALL IS PRESENT, PROVIDE (1) #4 CONTINUOUS IN SLAB (TYPICAL).
5. AT INTERIOR, NON-LOAD BEARING PARTITIONS, TOP OF PARTITION SHALL BE 1" MINIMUM BELOW FRAMING MEMBERS, SLABS, PLANK, OR DECK TO ALLOW FOR DEFLECTION OF STRUCTURE ABOVE. BRACE TOP OF PARTITION AS SHOWN IN DETAIL 9/S401.

10 S-401 MASONRY WALL REINFORCING ELEVATION
SCALE: 3/16" = 1'-0"

LINTEL SCHEDULE

MARK	SIZE	TYPE	REMARKS
L1	(2)L6x3 1/2x5/16 (LLV)	⅃⅃	
L2	W8x24	I	SPANS OVER DOOR AND HALLWAY. SEE DETAIL 2A/S303
L3	L6x6X5/16 GALV	⅃	VENEER ANGLE. SEE DWG S002 FOR BLOCK LINTEL SIZES

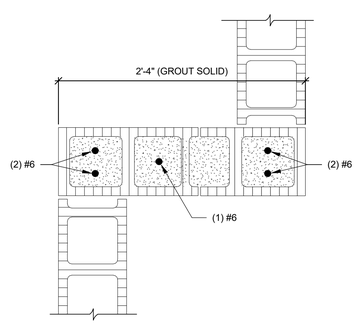

11 S-401 PLAN DETAIL
1 1/2" = 1'-0"

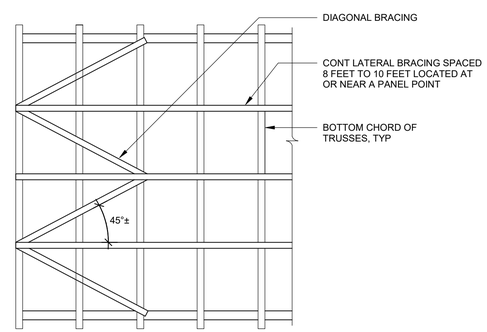

12 S-401 BOTTOM CHORD TRUSS BRACING
1/4" = 1'-0"

NEW YORK STATE OF OPPORTUNITY. Office of General Services
DESIGN & CONSTRUCTION

CONSULTANT:
LaBella Powered by partnership.
RYAN BIGGS CLARK DAVIS ENGINEERING & SURVEYING

WARNING:
THE ALTERATION OF THIS MATERIAL IN ANY WAY, UNLESS DONE UNDER THE DIRECTION OF A COMPARABLE PROFESSIONAL, I.E. ARCHITECT FOR AN ARCHITECT, ENGINEER FOR AN ENGINEER OR LANDSCAPE ARCHITECT FOR A LANDSCAPE ARCHITECT, IS A VIOLATION OF THE NEW YORK STATE EDUCATION LAW AND/OR REGULATIONS AND IS A CLASS 'A' MISDEMEANOR.

STATE OF NEW YORK · JAMES L. DAVIS · 072390 · LICENSED PROFESSIONAL ENGINEER

CONTRACT: CONSTRUCTION

TITLE: PROVIDE SUB-HEADQUARTERS BUILDING

LOCATION: DOT REGION 8, DUTCHESS COUNTY
205 LIME KILN RD.
EAST FISHKILL, NEW YORK

CLIENT: NEW YORK STATE DEPARTMENT OF TRANSPORTATION

MARK	DATE	DESCRIPTION
	10/17/2019	BID DOCUMENTS

PROJECT NUMBER: 45552-C
DESIGNED BY: JLD
DRAWN BY: RMS
FIELD CHECK:
APPROVED:

SHEET TITLE: SECTIONS

DRAWING NUMBER: S-401

3/23/2020 4:03:57 PM
C:\Users\RShepherd\Documents\11755-RSHKILL_DOT-CENTRAL-2019_rshepherd@ryanbiggs.com.rvt
36x24 PLOT SHEET

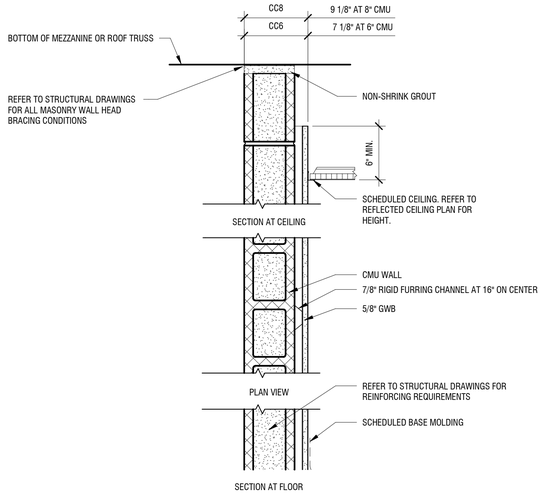

CC- CMU - FURRING

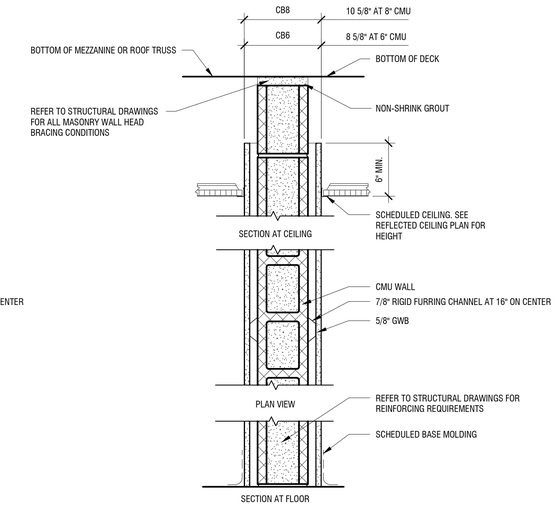

CB- CMU - FURRING

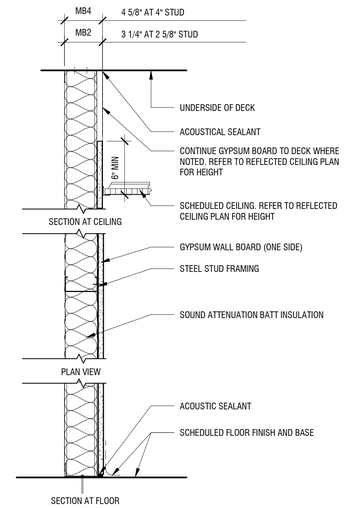

MB- GWB - METAL STUDS

GENERAL PARTITION NOTES

A. NOT ALL WALL TYPES SHOWN ON THIS SECTION ARE USED ON THIS PROJECT. REFER TO FLOOR PLANS FOR APPLICABLE WALL TYPES. REFER TO PARTITION SCHEDULER BELOW.

B. CONCRETE MASONRY UNIT (CMU):

1. ALL DIMENSIONS ARE NOMINAL TO FACE OF CMU.
2. PROVIDE JOINT REINFORCEMENT EVERY TWO COURSES - 16" OC VERTICAL. PROVIDE VERTICAL ROD REINFORCEMENT IN GROUTED CORES WHERE INDICATED BY STRUCTURAL SPECIFICATIONS AND DRAWINGS AND AT ALL WALL INTERSECTIONS AND OPENINGS (DOORS, WINDOWS, NICHES, PASSAGES, ETC.)
3. ALL PARTITIONS TO EXTEND FULL HEIGHT TO UNDERSIDE OF DECK UNLESS OTHERWISE NOTED. PROVIDE PARTITION TOP ANCHORS, 24" OC WHERE PARTITIONS ARE NOT BRACED BY STRUCTURAL FRAMING, TO STABILIZE PARTITIONS AT TOP OF WALL. REFER TO STRUCTURAL DRAWINGS.
4. PROVIDE ACOUSTICAL SEALANT AT ALL ELECTRICAL OUTLETS, PENETRATIONS AND OPENINGS, IN ALL COMMON PARTITIONS BETWEEN OFFICE AND VEHICLE STORAGE.
5. ALL EXPOSED CMU CORNERS SHALL BE BULLNOSED UNLESS OTHERWISE NOTED OR WHERE SCHEDULED TO RECEIVE CERAMIC TILE.

C. GYPSUM BOARD:

1. ALL INTERIOR STEEL STUD FRAMING SHALL BE 4" or 6", 18 GA. MIN AT 16" ON CENTER, UNLESS NOTED OTHERWISE .
2. ALL GYPSUM WALL BOARD (GWB) IN SHOWER/LOCKER ROOMS TO BE MOISTURE RESISTANT.
3. PROVIDE ACOUSTICAL SEALANT AT ALL PARTITIONS PERIMETERS, RUNNERS, ELECTRICAL OUTLETS, PENETRATIONS AND OPENINGS. TO MINIMIZE SOUND TRANSMISSION ELECTRICAL OUTLETS SHALL BE SEPARATED BY MINIMUM ONE STUD, BACK TO BACK RECEPTACLES ARE NOT ACCEPTABLE.
4. ALL STUD PARTITIONS SHALL RECEIVE 3" SOUND ATTENUATION BLANKET.
5. WHERE GWB PARTITION EDGE ALIGNS WITH CMU PARTITIONS EDGE, ADJUST GWB ALIGNMENT SO THAT GWB SURFACE LAMINATES OVER CMU, EXTEND GWB TO CORNER.
6. GWB CONSTRUCTION SHALL BE ISOLATED WITH CONTROL JOINTS WHERE:
   a. PARTITIONS OR CEILINGS OF DISSIMILAR CONSTRUCTION MEET AND REMAIN IN THE SAME PLANE.
   b. WHERE WINGS OF 'L', 'U' AND 'T' SHAPED CEILING AREAS ARE JOINED.
   c. EXPANSION OR CONTROL JOINTS OCCUR IN THE BUILDING STRUCTURE OR WALL CONSTRUCTION. PROVIDE CONTROL JOINTS IN THE FACE OF GWB PARTITIONS AND CEILINGS WHEN THE SIZE OF THE SURFACE EXCEEDS THE FOLLOWING CONTROL JOINT SPACING:
      - PARTITIONS: 30' MAXIMUM IN EITHER DIRECTION.
      - INTERIOR CEILINGS: 50' MAX. IN EITHER DIRECTION (W/ PERIMETER RELIEF). 30' MAX. IN EITHER DIRECTION (W/O PERIMETER RELIEF).
7. PROVIDE SOLID BLOCKING AT ALL WALLS RECEIVING WALL MOUNTED EQUIPMENT, CASEWORK AND/OR ACCESSORIES. COORDINATE WITH ALL TRADES AND FACILITY'S EQUIPMENT/FURNITURE LAYOUTS.
8. LOCATE ALL IN FLOOR RADIANT HEAT TUBING PRIOR TO MAKING ANY FLOOR PENETRATIONS. (IE. STEEL TRACK, BENCH PEDESTALS)
9. FINISHED DOOR OPENINGS SHALL BE NOMINAL 4" FROM FINISHED CORNER OF ROOM EXCEPT WHERE DIMENSIONED OTHERWISE. REFER TO DRAWINGS ON A-001.

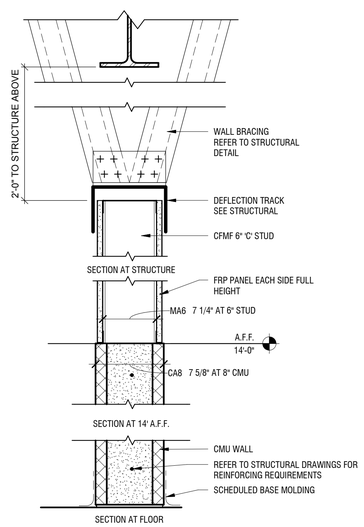

MA- CA- CMU AND METAL STUDS

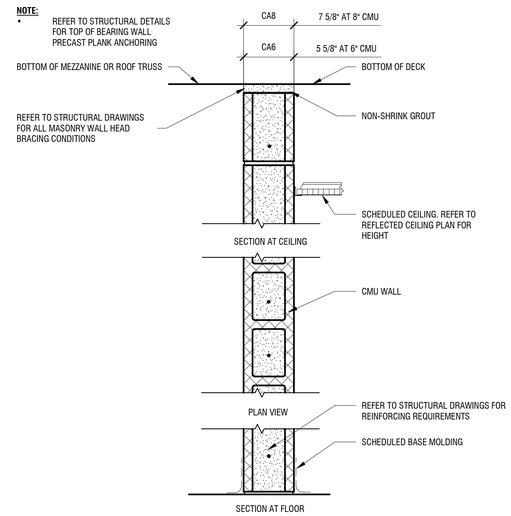

CA- CMU

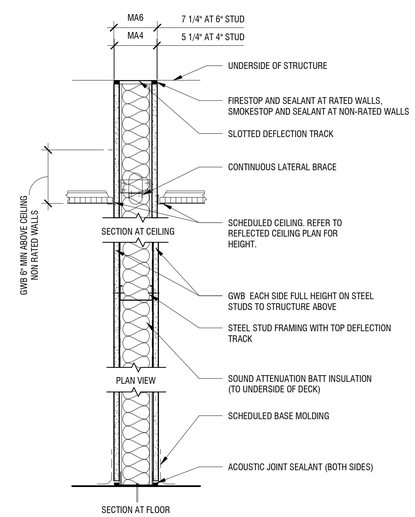

MA- GWB - METAL STUDS

PARTITION TYPE LEGEND

EXAMPLE: CS12.0b — M 3 . 1 b

- MATERIAL DESIGNATION
- RATING SUFFIX
- SIZE SUFFIX
- ACCESSORY SUFFIX

MATERIAL DESIGNATION

M	STEEL STUDS
C	CONCRETE MASONRY UNITS (CMU)

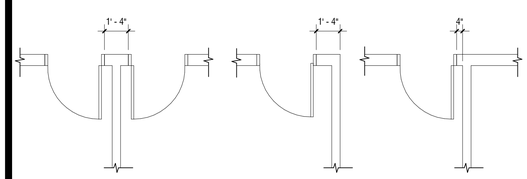

NOTE:
• CMU WALL DOOR FRAME LOCATIONS UNLESS DIMENSIONED OR DETAILED OTHERWISE

2 A-001 TYPICAL DOOR LOCATIONS - CMU WALLS
SCALE: 1/4" = 1'-0"

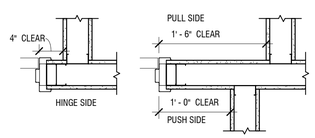

1 A-001 TYPICAL DOOR LOCATIONS - METAL STUD WALLS
SCALE: 1" = 1'-0"

ROOM FINISH SCHEDULE

ROOM NUMBER	NAME	FLOORS MATERIAL	FLOORS FINISH	BASE MATERIAL	BASE FINISH	WALLS NORTH WALL MATERIAL	WALLS NORTH WALL FINISH	WALLS EAST WALL MATERIAL	WALLS EAST WALL FINISH	WALLS SOUTH WALL MATERIAL	WALLS SOUTH WALL FINISH	WALLS WEST WALL MATERIAL	WALLS WEST WALL FINISH	TRIM MATERIAL	TRIM FINISH	CEILING MATERIAL	CEILING FINISH	HEIGHT	FINISH NOTES: 1. PAINT ALL EXPOSED INTERIOR RIGID FRAMES, PURLINS AND UNDERSIDE OF METAL DECK WITH AU PAINT SYSTEM, MATCH COLOR OF INTERIOR INSULATED LINER PANELS 2. PROVIDE FRP WALL SURFACING TO 8'-0" AFF
101	VESTIBULE	CONCRETE	SFS	SFS	-	GWB	IAL-3	GWB	IAL-3	GWB	IAL-3	GWB	IAL-3	-	-	ACT-1	-	8' - 0"	PROVIDE HOLD DOWN CLIPS FOR CEILING
102	HMS-2 OFFICE	CONCRETE	SFS	SFS	-	GWB	IAL-3	GWB	IAL-3	GWB	IAL-3	GWB	IAL-3	WD	IAL-4	ACT-1	-	8' - 0"	GWB ON 7/8" METAL FURRING AT CMU WALLS
103	HMS-1 OFFICE	CONCRETE	SFS	SFS	-	GWB	IAL-3	GWB	IAL-3	GWB	IAL-3	GWB	IAL-3	WD	IAL-4	ACT-1	-	8' - 0"	GWB ON 7/8" METAL FURRING AT CMU WALLS
104	CORRIDOR	CONCRETE	SFS	SFS	-	CMU/GWB	IAL-3	CMU/GWB	IAL-3	CMU/GWB	IAL-3	CMU/GWB	IAL-3	-	-	ACT-1	-	8' - 0"	-
105	WOMENS SHOWER/LOCKER ROOM	CONCRETE	SFS	SFS	-	GWB	HBGC	GWB	HBGC	GWB	HGBC	GWB	HGBC	-	-	ACT-1	-	8' - 0"	PROVIDE MOISTURE RESISTANT GWB & ACT
106	LUNCH ROOM	CONCRETE	SFS	SFS	-	GWB	IAL-3	GWB	IAL-3	GWB	IAL-3	GWB	IAL-3	WD	IAL-4	ACT-1	-	8' - 0"	GWB ON 7/8" METAL FURRING @ CMU WALLS
107	MENS SHOWER/LOCKER ROOM	CONCRETE	SFS	SFS	-	GWB	HBGC	GWB	HBGC	GWB	HGBC	GWB	HGBC	-	-	ACT-1	-	8' - 0"	PROVIDE MOISTURE RESISTANT GWB & ACT
108	ELECTRIC	CONCRETE	SFS	SFS	-	CMU	HBGC	CMU	HBGC	CMU	HGBC	CMU	HGBC	-	-	PRECAST	IAL-4	10' - 0"	-
109	JAN	CONCRETE	SFS	SFS	-	CMU	FRP	CMU	FRP	CMU	FRP	CMU	FRP	-	-	PRECAST	IAL-4	10' - 0"	REFER TO FINISH NOTE 2
110	TOOL	CONCRETE	SFS	SFS	-	CMU	HBGC	CMU	HBGC	CMU	HGBC	CMU	HGBC	-	-	PRECAST	IAL-4	10' - 0"	-
111	MECHANICAL	CONCRETE	IEAS	-	-	CMU	HBGC	CMU	HBGC	CMU	HGBC	CMU	HGBC	-	-	PRECAST	IAL-4	10' - 0"	STRIKE BLOCK JOINTS SMOOTH
112	DATA	CONCRETE	SFS	SFS	-	CMU	HBGC	CMU	HBGC	CMU	HGBC	CMU	HGBC	-	-	PRECAST	IAL-4	10' - 0"	-
113	WASH	CONCRETE	IEAS	-	-	FRP	FACTORY	FRP	FACTORY	FRP	FACTORY	FRP	FACTORY	-	-	PANEL	FACTORY		REFER TO FINISH NOTE 1 AND 2; CEILING HEIGHT VARIES
115	VEHICLE STORAGE	CONCRETE	IEAS	-	-	PANEL	FACTORY	PANEL	FACTORY	PANEL	FACTORY	PANEL	FACTORY	-	-	PANEL	FACTORY		REFER TO FINISH NOTE 1 AND 2; CEILING HEIGHT VARIES
117	PUMP HOUSE	CONCRETE	EXPOSED TROWEL FINISH	-	-	GWB	IAL-4	GWB	IAL-4	GWB	IAL-4	GWB	IAL-4	-	-	GWB	IAL-3	8' - 0"	REFER TO SHEET A-104 FOR PUMP HOUSE, LIQUID CONCRETE SEALER ON FLOOR. PROVIDE MOISTURE RESISTANT GWB
201	MEZZANINE	CONCRETE	-	-	-	-	-	-	-	-	-	-	-	-	-	-	-		

NEW YORK STATE OF OPPORTUNITY. Office of General Services
DESIGN & CONSTRUCTION

CONSULTANT:
LaBella Powered by partnership.

WARNING:
THE ALTERATION OF THIS MATERIAL IN ANY WAY, UNLESS DONE UNDER THE DIRECTION OF A COMPARABLE PROFESSIONAL, I.E. ARCHITECT FOR AN ARCHITECT, ENGINEER FOR AN ENGINEER OR LANDSCAPE ARCHITECT FOR A LANDSCAPE ARCHITECT, IS A VIOLATION OF THE NEW YORK STATE EDUCATION LAW AND/OR REGULATIONS AND IS A CLASS 'A' MISDEMEANOR.

REGISTERED ARCHITECT DAVID L. WELLS 037599 STATE OF NEW YORK
03/20/2020

CONTRACT: CONSTRUCTION

TITLE: PROVIDE SUB-HEADQUARTERS BUILDING

LOCATION: DOT REGION 8, DUTCHESS COUNTY 205 LIME KILN RD. EAST FISHKILL, NEW YORK

CLIENT: NEW YORK STATE DEPARTMENT OF TRANSPORTATION

MARK	DATE	DESCRIPTION
	10/17/2019	BID DOCUMENTS

PROJECT NUMBER: 45552-C
DESIGNED BY: DMD
DRAWN BY: DMD
FIELD CHECK:
APPROVED:

SHEET TITLE: PARTITION TYPES AND ROOM FINISH SCHEDULE

DRAWING NUMBER: A-001

2/28/2020 2:19:25 PM
C:\Users\Shackett\Documents\Revit Local Files\2018 DOT Sub Headquarter Bldg_shackett.rvt
36x24 PLOT SHEET

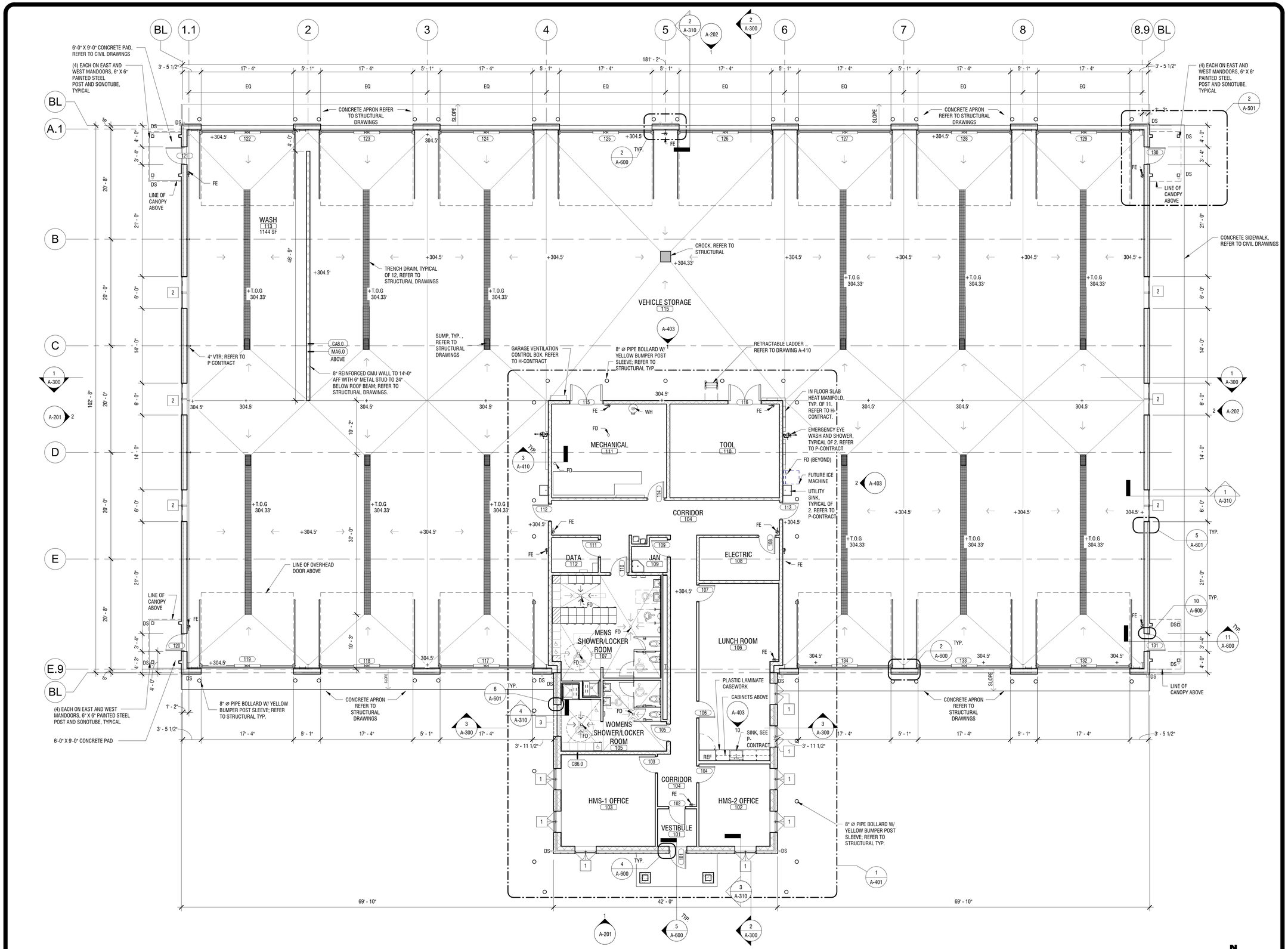

1 A-101 FIRST FLOOR PLAN
SCALE: 1/8" = 1'-0"

2/28/2020 2:19:34 PM
C:\Users\SHackett\Documents\Revit Local Files\2018 DOT Sub Headquarter Bldg_shackett.rvt
36x24 PLOT SHEET

NEW YORK STATE OF OPPORTUNITY. Office of General Services
DESIGN & CONSTRUCTION

CONSULTANT:
LaBella Powered by partnership.

WARNING:
THE ALTERATION OF THIS MATERIAL IN ANY WAY, UNLESS DONE UNDER THE DIRECTION OF A COMPARABLE PROFESSIONAL, I.E. ARCHITECT FOR AN ARCHITECT, ENGINEER FOR AN ENGINEER OR LANDSCAPE ARCHITECT FOR A LANDSCAPE ARCHITECT, IS A VIOLATION OF THE NEW YORK STATE EDUCATION LAW AND/OR REGULATIONS AND IS A CLASS 'A' MISDEMEANOR.

REGISTERED ARCHITECT DAVID L. WELLS 037599 STATE OF NEW YORK
03/20/2020

CONTRACT: CONSTRUCTION

TITLE: PROVIDE SUB-HEADQUARTERS BUILDING

LOCATION: DOT REGION 8, DUTCHESS COUNTY
205 LIME KILN RD.
EAST FISHKILL, NEW YORK

CLIENT: NEW YORK STATE DEPARTMENT OF TRANSPORTATION

MARK	DATE	DESCRIPTION
	10/17/2019	BID DOCUMENTS

PROJECT NUMBER:	45552-C
DESIGNED BY:	DMD
DRAWN BY:	DMD
FIELD CHECK:	
APPROVED:	

SHEET TITLE: FIRST FLOOR PLAN

DRAWING NUMBER: A-101

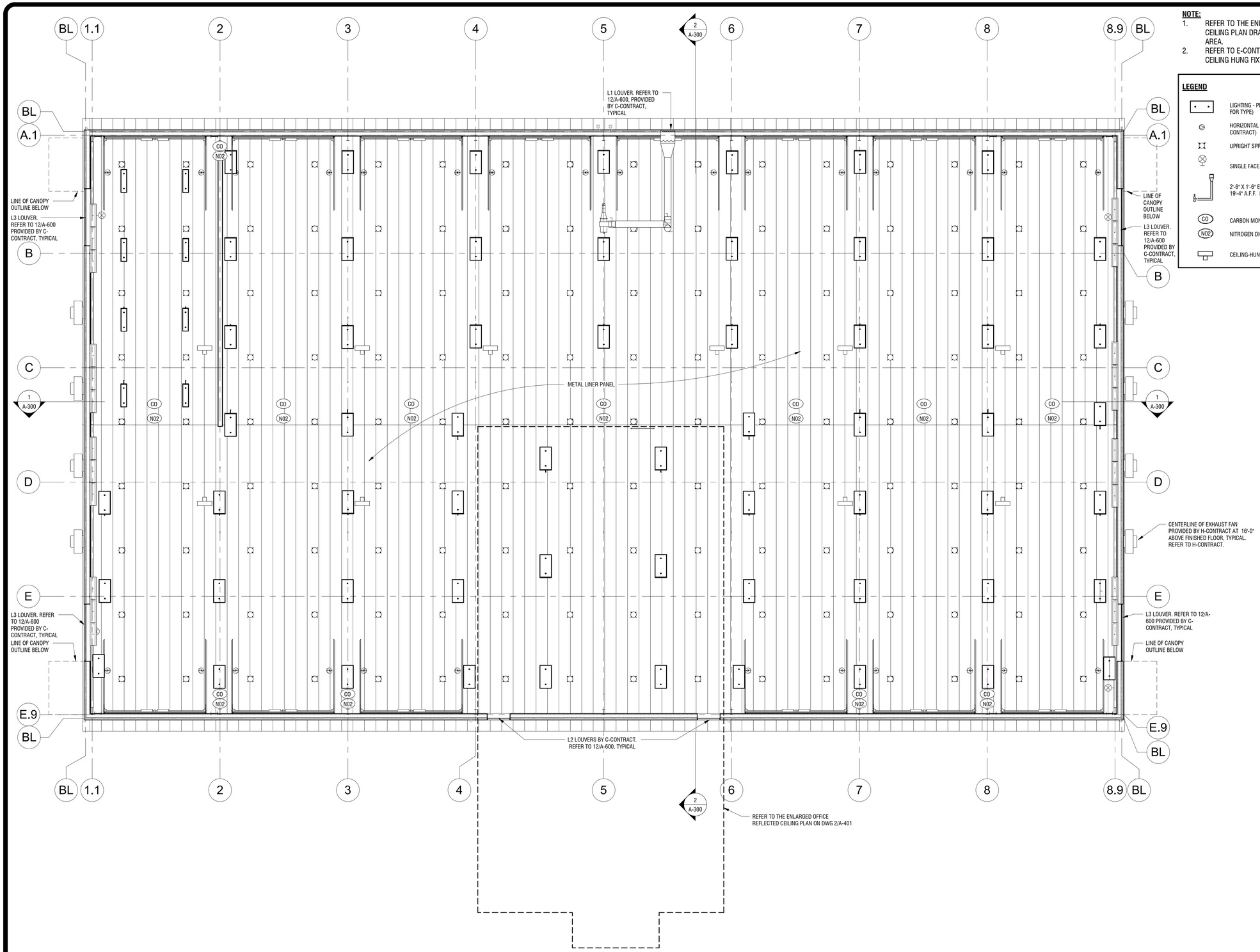

NOTE:

1. REFER TO THE ENLARGED OFFICE REFLECTED CEILING PLAN DRAWING ON 2/A-401 FOR OFFICE AREA.
2. REFER TO E-CONTRACT FOR ALL ELECTRICAL CEILING HUNG FIXTURE DETAILS.

LEGEND

- LIGHTING - PENDENT FIXTURE (REFER TO E-CONTRACT FOR TYPE)
- HORIZONTAL SIDEWALL SPRINKLER HEAD (REFER TO P-CONTRACT)
- UPRIGHT SPRINKLER HEAD (REFER TO P-CONTRACT)
- SINGLE FACE EXIT SIGN (REFER TO E-CONTRACT)
- 2'-6" X 1'-6" EXHAUST AIR LOUVER. BOTTOM OF LOUVER 19'-4" A.F.F. PROVIDE 24" DEEP PLENUM
- CO — CARBON MONOXIDE SENSOR (REFER TO H-CONTRACT)
- NO2 — NITROGEN DIOXIDE SENSOR (REFER TO H-CONTRACT)
- CEILING-HUNG UNIT HEATER (REFER TO H-CONTRACT)

2 A-102 REFLECTED CEILING PLAN
SCALE: 1/8" = 1'-0"

N

NEW YORK STATE OF OPPORTUNITY. Office of General Services
DESIGN & CONSTRUCTION

CONSULTANT:
LaBella Powered by partnership.

WARNING:
THE ALTERATION OF THIS MATERIAL IN ANY WAY, UNLESS DONE UNDER THE DIRECTION OF A COMPARABLE PROFESSIONAL, I.E. ARCHITECT FOR AN ARCHITECT, ENGINEER FOR AN ENGINEER OR LANDSCAPE ARCHITECT FOR A LANDSCAPE ARCHITECT, IS A VIOLATION OF THE NEW YORK STATE EDUCATION LAW AND/OR REGULATIONS AND IS A CLASS 'A' MISDEMEANOR.

REGISTERED ARCHITECT DAVID L. WELLS 037599 STATE OF NEW YORK
03/20/2020

CONTRACT: CONSTRUCTION

TITLE: PROVIDE SUB-HEADQUARTERS BUILDING

LOCATION: DOT REGION 8, DUTCHESS COUNTY
205 LIME KILN RD.
EAST FISHKILL, NEW YORK

CLIENT: NEW YORK STATE DEPARTMENT OF TRANSPORTATION

MARK	DATE	DESCRIPTION
	10/17/2019	BID DOCUMENTS

PROJECT NUMBER:	45552-C
DESIGNED BY:	DMD
DRAWN BY:	DMD
FIELD CHECK:	
APPROVED:	

SHEET TITLE: FIRST FLOOR REFLECTED CEILING PLAN

DRAWING NUMBER: A-102

2/28/2020 2:19:40 PM
C:\Users\Shackett\Documents\Revit Local Files\2018 DOT Sub Headquarter Bldg_shackett.rvt
36x24 PLOT SHEET

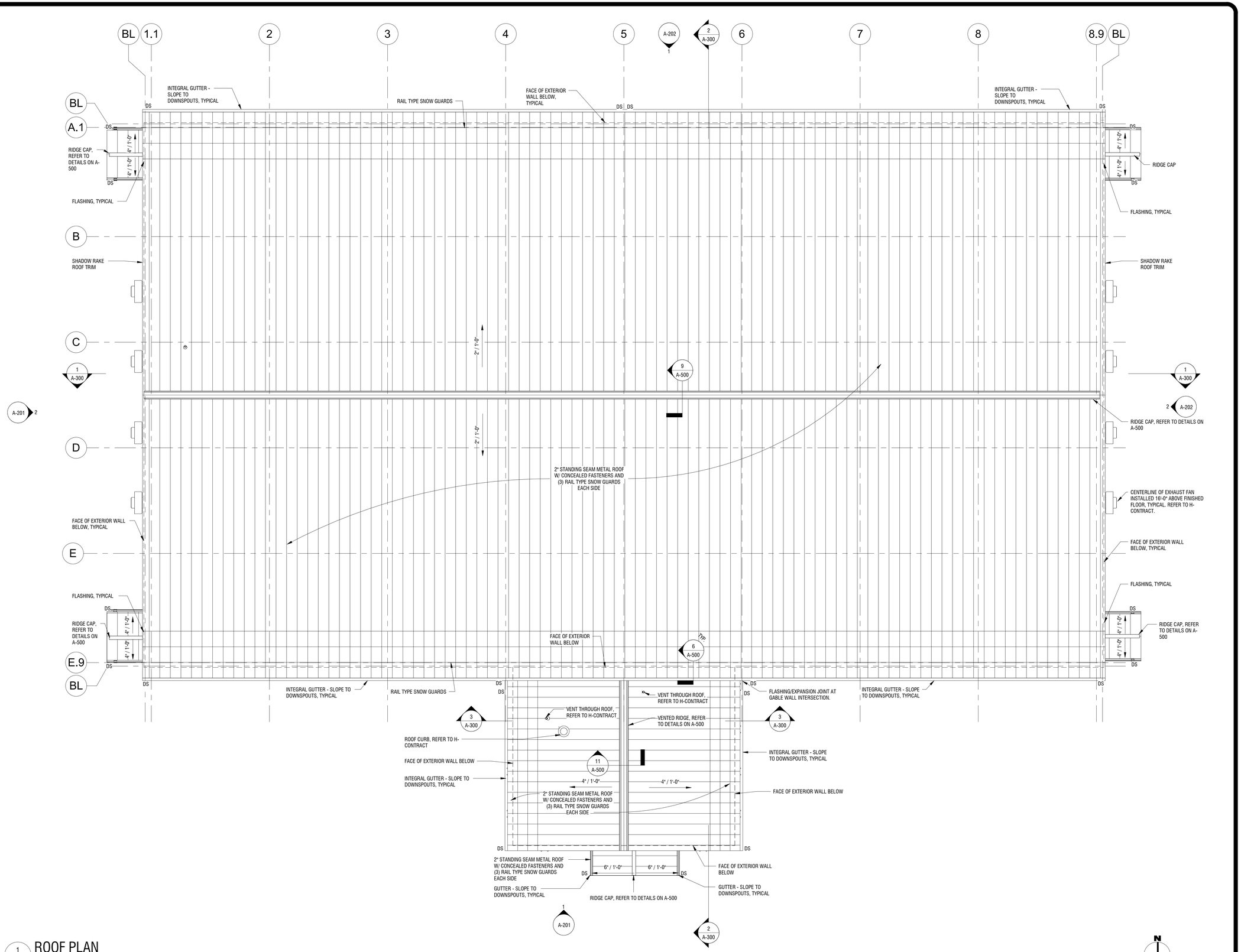

1 A-103 ROOF PLAN
SCALE: 1/8" = 1'-0"

2/28/2020 2:19:42 PM
C:\Users\Shackett\Documents\Revit Local Files\2018 DOT Sub Headquarter Bldg_shackett.rvt
36x24 PLOT SHEET

NEW YORK STATE OF OPPORTUNITY. Office of General Services
DESIGN & CONSTRUCTION

CONSULTANT:
LaBella
Powered by partnership.

WARNING:
THE ALTERATION OF THIS MATERIAL IN ANY WAY, UNLESS DONE UNDER THE DIRECTION OF A COMPARABLE PROFESSIONAL, I.E. ARCHITECT FOR AN ARCHITECT, ENGINEER FOR AN ENGINEER OR LANDSCAPE ARCHITECT FOR A LANDSCAPE ARCHITECT, IS A VIOLATION OF THE NEW YORK STATE EDUCATION LAW AND/OR REGULATIONS AND IS A CLASS 'A' MISDEMEANOR.

REGISTERED ARCHITECT DAVID L. WELLS 037599 STATE OF NEW YORK
03/20/2020

CONTRACT:
CONSTRUCTION

TITLE:
PROVIDE SUB-HEADQUARTERS BUILDING

LOCATION:
DOT REGION 8, DUTCHESS COUNTY
205 LIME KILN RD.
EAST FISHKILL, NEW YORK

CLIENT:
NEW YORK STATE DEPARTMENT OF TRANSPORTATION

MARK	DATE	DESCRIPTION
	10/17/2019	BID DOCUMENTS

PROJECT NUMBER:	45552-C
DESIGNED BY:	DMD
DRAWN BY:	DMD
FIELD CHECK:	
APPROVED:	

SHEET TITLE:
ROOF PLAN

DRAWING NUMBER:
A-103

GENERAL NOTES
1. REFER TO 'DOOR SCHEDULES AND DETAILS' ON DRAWING A-600 FOR PUMP HOUSE DOOR INFORMATION.
2. REFER TO E-CONTRACT FOR CEILING HUNG HEATER AND LIGHTS.

FINISH NOTES

1. WALLS: APPLY TWO (2) COATS OF IAL-4 PAINT. REFER TO PROJECT MANUAL SECTION 099659. COLOR TO BE SELECTED BY DIRECTOR'S REPRESENTATIVE.
2. CEILING: TWO (2) COATS OF IAL-3 PAINT. COLOR TO BE CHOSEN BY DIRECTOR'S REPRESENTATIVE. REFER TO PROJECT MANUAL SECTION 099659. COLOR TO BE SELECTIVE BY DIRECTOR'S REPRESENTATIVE.
3. FLOOR: EXPOSED TROWEL FINISH. APPLY LIQUID PENETRATING CONCRETE SEALER. REFER TO PROJECT MANUAL SECTION 033000.

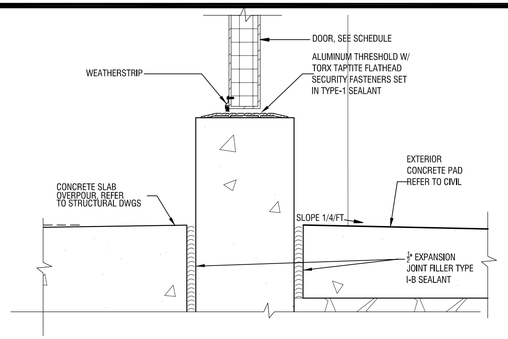

14 A-104 THRESHOLD / SLAB DETAIL
SCALE: 3" = 1'-0"

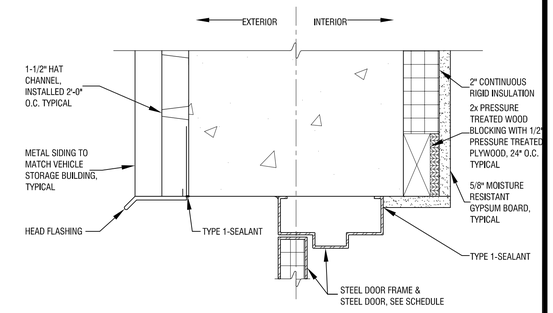

13 A-104 HEAD DETAIL - DOOR PH-1
SCALE: 3" = 1'-0"

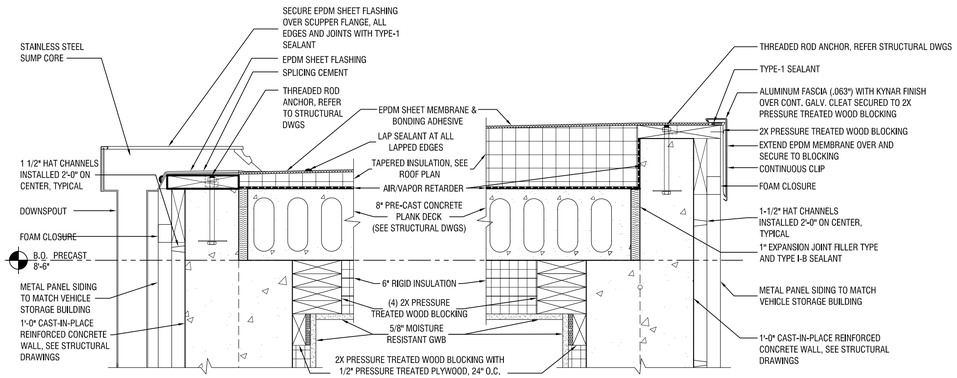

12 A-104 DRAIN - WALL/ROOF DETAIL
SCALE: 1-1/2" = 1'-0"

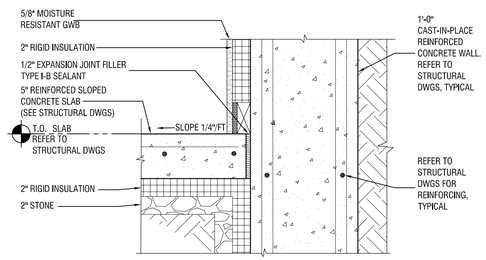

NOTE:
SEE STRUCTURAL DRAWINGS FOR STRUCTURAL DETAILS, TYPICAL

10 A-104 WALL / SLAB DETAIL
SCALE: 1-1/2" = 1'-0"

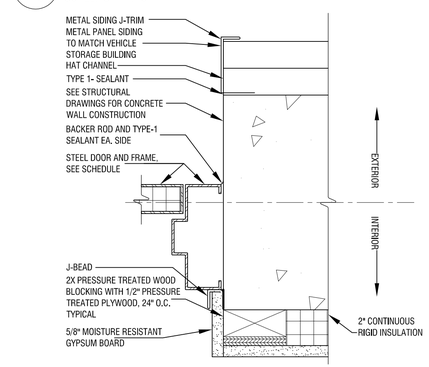

9 A-104 JAMB DETAIL - DOOR PH-1
SCALE: 3" = 1'-0"

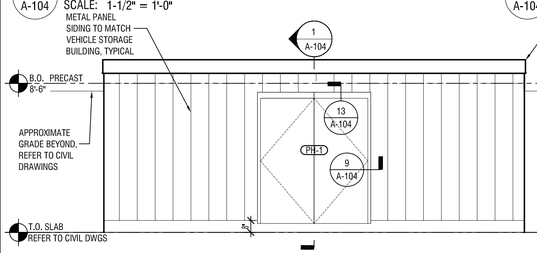

NOTE:
1. REFER TO CIVIL DRAWINGS FOR ALL LOCATIONS OF ALL WALL PENETRATIONS

12 A-104 DRAIN - WALL/ROOF DETAIL
SCALE: 1-1/2" = 1'-0"

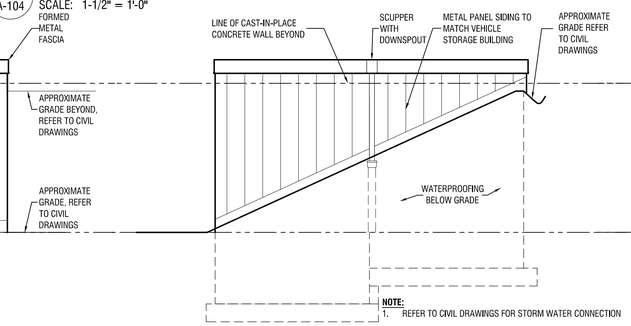

NOTE:
1. REFER TO CIVIL DRAWINGS FOR STORM WATER CONNECTION

11 A-104 WALL/ROOF DETAIL
SCALE: 1-1/2" = 1'-0"

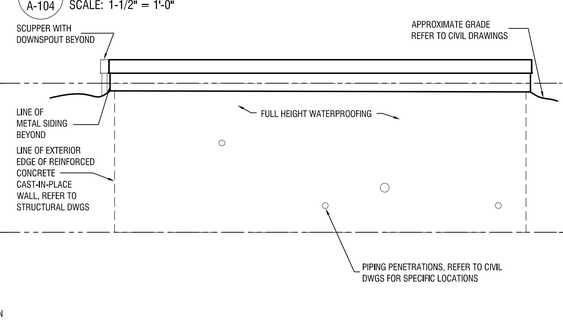

10 A-104 WALL / SLAB DETAIL
SCALE: 1-1/2" = 1'-0"

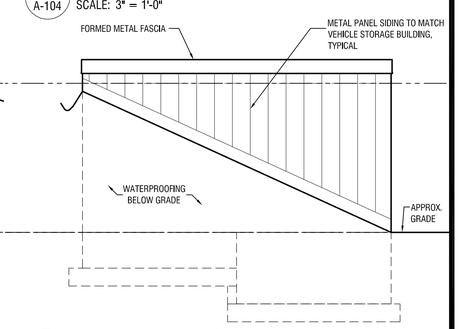

9 A-104 JAMB DETAIL - DOOR PH-1
SCALE: 3" = 1'-0"

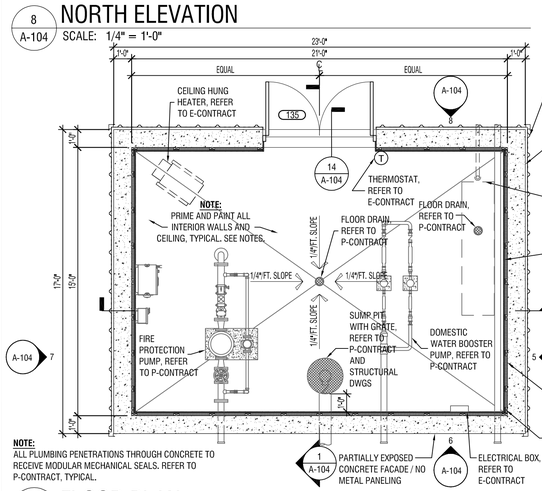

NOTE:
ALL PLUMBING PENETRATIONS THROUGH CONCRETE TO RECEIVE MODULAR MECHANICAL SEALS. REFER TO P-CONTRACT, TYPICAL.

4 A-104 FLOOR PLAN
SCALE: 1/4" = 1'-0"

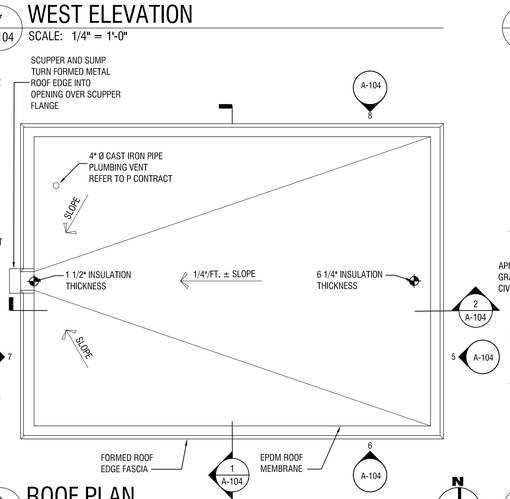

3 A-104 ROOF PLAN
SCALE: 1/4" = 1'-0"

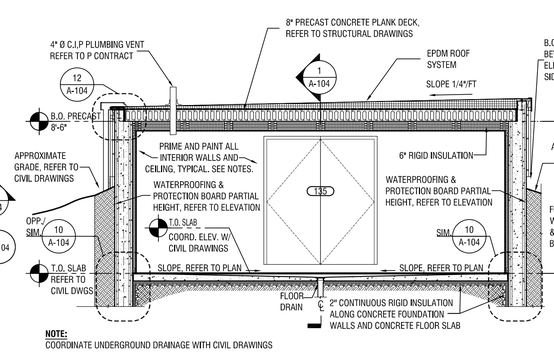

NOTE:
COORDINATE UNDERGROUND DRAINAGE WITH CIVIL DRAWINGS

2 A-104 BUILDING SECTION
SCALE: 1/4" = 1'-0"

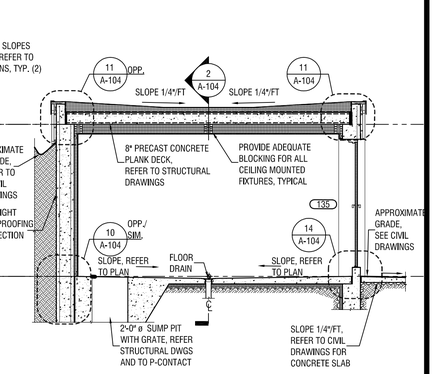

1 A-104 BUILDING SECTION
SCALE: 1/4" = 1'-0"

7/12/2019 11:32:40 AM
\\PROJECTS2\Projects\NZ\NY50SS\2172198 - Sub-HQ Bldg Reg8\Drawings\Arch\Pump Bldg\Drawings\Sheets - Architecture
36x24 PLOT SHEET

NEW YORK STATE OF OPPORTUNITY. Office of General Services
DESIGN & CONSTRUCTION

CONSULTANT:
LaBella Powered by partnership.

WARNING:
THE ALTERATION OF THIS MATERIAL IN ANY WAY, UNLESS DONE UNDER THE DIRECTION OF A COMPARABLE PROFESSIONAL, I.E. ARCHITECT FOR AN ARCHITECT, ENGINEER FOR AN ENGINEER OR LANDSCAPE ARCHITECT FOR A LANDSCAPE ARCHITECT, IS A VIOLATION OF THE NEW YORK STATE EDUCATION LAW AND/OR REGULATIONS AND IS A CLASS 'A' MISDEMEANOR.

REGISTERED ARCHITECT DAVID L. WELLS 037599 STATE OF NEW YORK
03/20/2020

CONTRACT: CONSTRUCTION

TITLE: PROVIDE SUB-HEADQUARTERS BUILDING

LOCATION: DOT REGION 8, DUTCHESS COUNTY 205 LIME KILN RD. EAST FISHKILL, NEW YORK

CLIENT: NEW YORK STATE DEPARTMENT OF TRANSPORTATION

MARK	DATE	DESCRIPTION
	10/17/2019	BID DOCUMENTS

PROJECT NUMBER:	45552-C
DESIGNED BY:	SAH
DRAWN BY:	KAC
FIELD CHECK:	
APPROVED:	

SHEET TITLE: PUMP HOUSE PLAN, SECTIONS AND DETAILS

DRAWING NUMBER: A-104

ELEVATION KEYNOTES	
1	2" STANDING SEAM METAL ROOF, TYPICAL.
2	SNOW GUARDS, MATCH METAL ROOF COLOR, TYPICAL.
3	INTEGRAL GUTTER AND DOWNSPOUT, DISCHARGE OF RAIN GUTTER BELOW GRADE, REFER TO SITE DRAWINGS, TYPICAL.
4	EXTERIOR METAL SIDING PANELS, TYPICAL.
5	FLASHING AT WALL TRANSITION, TYPICAL.
6	PAINTED STEEL TUBE, TYPICAL.
7	INSULATED METAL ENTRY DOOR, REFER TO DOOR SCHEDULE.
8	8" DIAMETER PIPE BOLLARD MAX. SPACED 5'-8" O.C. W/ BOLLARD COVER TYPICAL. REFER TO STRUCTURAL DRAWINGS.
9	VINYL CLAD CASEMENT WINDOW, TYPICAL. REFER TO WINDOW DETAILS.
10	PRECAST CONCRETE SILL, TYPICAL.
11	SHADOW RAKE ROOF TRIM, TYPICAL.
12	EXTERIOR LIGHT FIXTURE, TYPICAL. REFER TO DETAIL 1/A-102 AND TO E-CONTRACT.
13	SPLIT FACE CONCRETE MASONRY UNITS, TYPICAL.
14	BOTTOM OF LOUVER 14'-0" ABOVE FINISHED FLOOR, TYPICAL.
15	CENTERLINE OF EXHAUST FAN INSTALLED 16'-0" ABOVE FINISHED FLOOR. BY H-CONTRACT, TYPICAL.
16	FIXED/ AWNING METAL WINDOW BY METAL BUILDING MANUFACTURER, TYPICAL.
17	GLASS BLOCK WINDOW, TYPICAL. REFER TO WINDOW DETAILS.
18	INSULATED OVERHEAD DOOR, TYPICAL.
19	CMU PER, TYPICAL.
20	CONCRETE APRON, TYPICAL.
21	LINE OF CONCRETE FOUNDATION WALL AND FOOTING, TYPICAL. REFER TO STRUCTURAL DRAWINGS.
22	NON FREEZE WALL HYDRANT, REFER TO P-CONTRACT.
23	VENT THROUGH WALL. REFER TO H-CONTRACT, TYPICAL.
24	PIPING THROUGH WALL. REFER TO H-CONTRACT, TYPICAL.
25	METAL ROOF RIDGE CAP, REFER TO DETAIL ON DWG A-500
26	VENTED METAL ROOF RIDGE, REFER TO DETAIL ON DWG A-500
27	10"x4" EXHAUST AIR WALL CAP, COORDINATE WITH H-CONTRACT.
28	2'-6" x 1'-6" EXHAUST AIR LOUVER BY C-CONTRACT, BOTTOM OF LOUVER 19'-4" AFF. PROVIDE 24" DEEP PLENUM.
29	ROOF CURB, REFER TO H-CONTRACT
30	GAS METER, REFER TO H-CONTRACT
31	JUNCTION BOX
32	CT CABINET

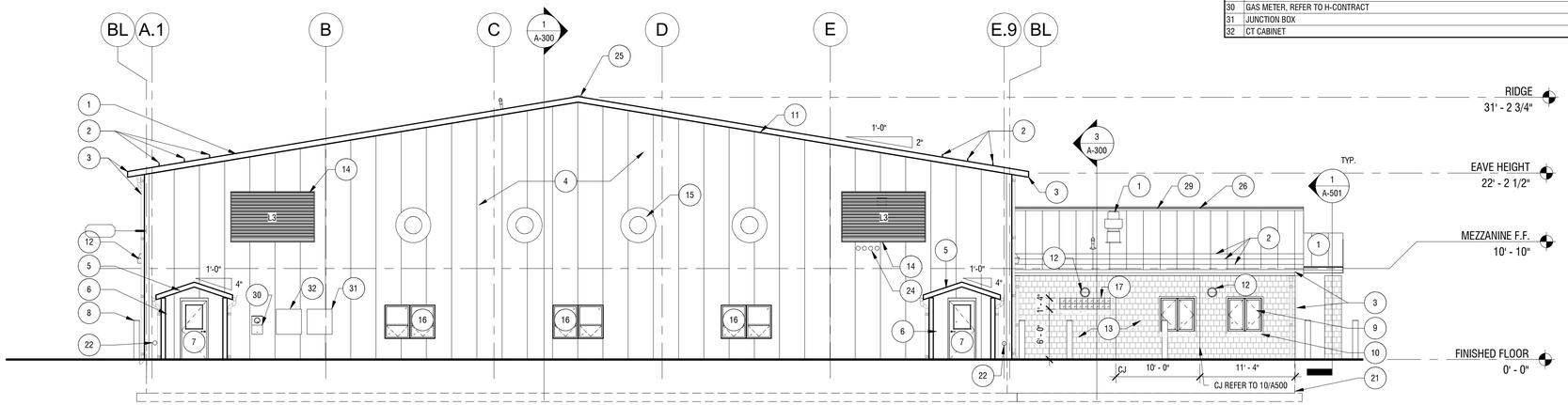

2 A-201 WEST ELEVATION
SCALE: 1/8" = 1'-0"

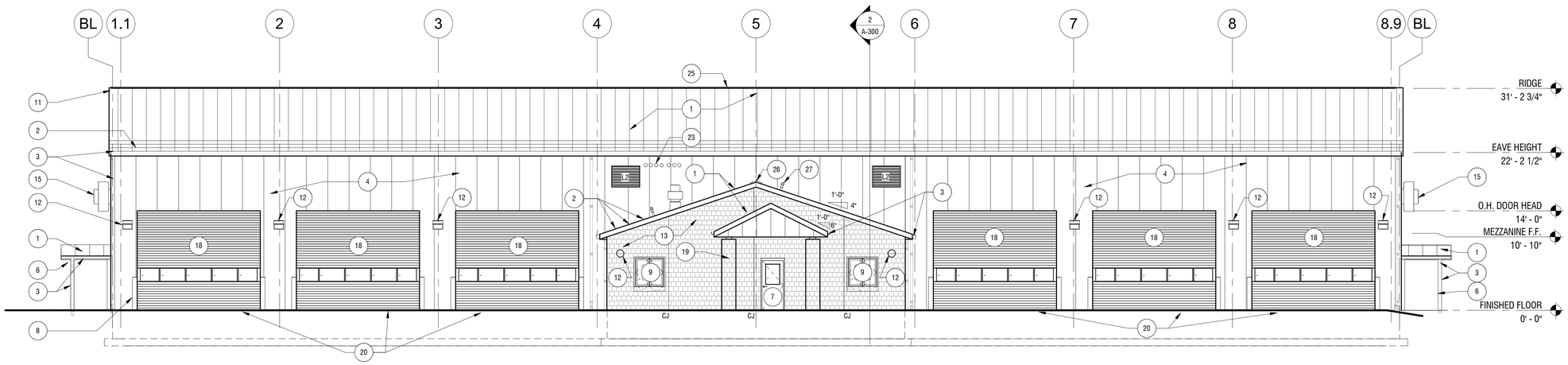

1 A-201 SOUTH ELEVATION
SCALE: 1/8" = 1'-0"

NEW YORK STATE OF OPPORTUNITY. Office of General Services

DESIGN & CONSTRUCTION

CONSULTANT:

LaBella
Powered by partnership.

WARNING:

THE ALTERATION OF THIS MATERIAL IN ANY WAY, UNLESS DONE UNDER THE DIRECTION OF A COMPARABLE PROFESSIONAL, I.E. ARCHITECT FOR AN ARCHITECT, ENGINEER FOR AN ENGINEER OR LANDSCAPE ARCHITECT FOR A LANDSCAPE ARCHITECT, IS A VIOLATION OF THE NEW YORK STATE EDUCATION LAW AND/OR REGULATIONS AND IS A CLASS 'A' MISDEMEANOR.

REGISTERED ARCHITECT DAVID L. WELLS 037599 STATE OF NEW YORK
03/20/2020

CONTRACT: CONSTRUCTION

TITLE: PROVIDE SUB-HEADQUARTERS BUILDING

LOCATION: DOT REGION 8, DUTCHESS COUNTY
205 LIME KILN RD.
EAST FISHKILL, NEW YORK

CLIENT: NEW YORK STATE DEPARTMENT OF TRANSPORTATION

MARK	DATE	DESCRIPTION
	10/17/2019	BID DOCUMENTS

PROJECT NUMBER:	45552-C
DESIGNED BY:	DMD
DRAWN BY:	DMD
FIELD CHECK:	
APPROVED:	

SHEET TITLE: EXTERIOR ELEVATIONS

DRAWING NUMBER: A-201

3/17/2020 4:57:56 PM
C:\Users\Shacket\Documents\Revit Local Files\2018 DOT Sub Headquarter Bldg_shacket.rvt
36x24 PLOT SHEET

ELEVATION KEYNOTES	
1	2" STANDING SEAM METAL ROOF, TYPICAL.
2	SNOW GUARDS, MATCH METAL ROOF COLOR, TYPICAL.
3	INTEGRAL GUTTER AND DOWNSPOUT, DISCHARGE OF RAIN GUTTER BELOW GRADE, REFER TO SITE DRAWINGS, TYPICAL.
4	EXTERIOR METAL SIDING PANELS, TYPICAL.
5	FLASHING AT WALL TRANSITION, TYPICAL.
6	PAINTED STEEL TUBE, TYPICAL.
7	INSULATED METAL ENTRY DOOR, REFER TO DOOR SCHEDULE.
8	8" DIAMETER PIPE BOLLARD MAX. SPACED 5'-8" O.C. W/ BOLLARD COVER TYPICAL. REFER TO STRUCTURAL DRAWINGS.
9	VINYL CLAD CASEMENT WINDOW, TYPICAL. REFER TO WINDOW DETAILS.
10	PRECAST CONCRETE SILL, TYPICAL.
11	SHADOW RAKE ROOF TRIM, TYPICAL.
12	EXTERIOR LIGHT FIXTURE, TYPICAL. REFER TO DETAIL 1/A-102 AND TO E-CONTRACT.
13	SPLIT FACE CONCRETE MASONRY UNITS, TYPICAL.
14	BOTTOM OF LOUVER 14-0" ABOVE FINISHED FLOOR, TYPICAL.
15	CENTERLINE OF EXHAUST FAN INSTALLED 16'-0" ABOVE FINISHED FLOOR. BY H-CONTRACT, TYPICAL.
16	FIXED/ AWNING METAL WINDOW BY METAL BUILDING MANUFACTURER, TYPICAL.
17	GLASS BLOCK WINDOW, TYPICAL. REFER TO WINDOW DETAILS.
18	INSULATED OVERHEAD DOOR, TYPICAL.
19	CMU PIER, TYPICAL.
20	CONCRETE APRON, TYPICAL.
21	LINE OF CONCRETE FOUNDATION WALL AND FOOTING, TYPICAL. REFER TO STRUCTURAL DRAWINGS.
22	NON FREEZE WALL HYDRANT, REFER TO P-CONTRACT.
23	VENT THROUGH WALL. REFER TO H-CONTRACT, TYPICAL.
24	PIPING THROUGH WALL. REFER TO H-CONTRACT, TYPICAL.
25	METAL ROOF RIDGE CAP, REFER TO DETAIL ON DWG A-500
26	VENTED METAL ROOF RIDGE, REFER TO DETAIL ON DWG A-500
27	10"x4" EXHAUST AIR WALL CAP, COORDINATE WITH H-CONTRACT.
28	2'-6" x 1'-6" EXHAUST AIR LOUVER BY C-CONTRACT, BOTTOM OF LOUVER 19-4" AFF. PROVIDE 24" DEEP PLENUM.
29	ROOF CURB, REFER TO H-CONTRACT
30	GAS METER, REFER TO H-CONTRACT

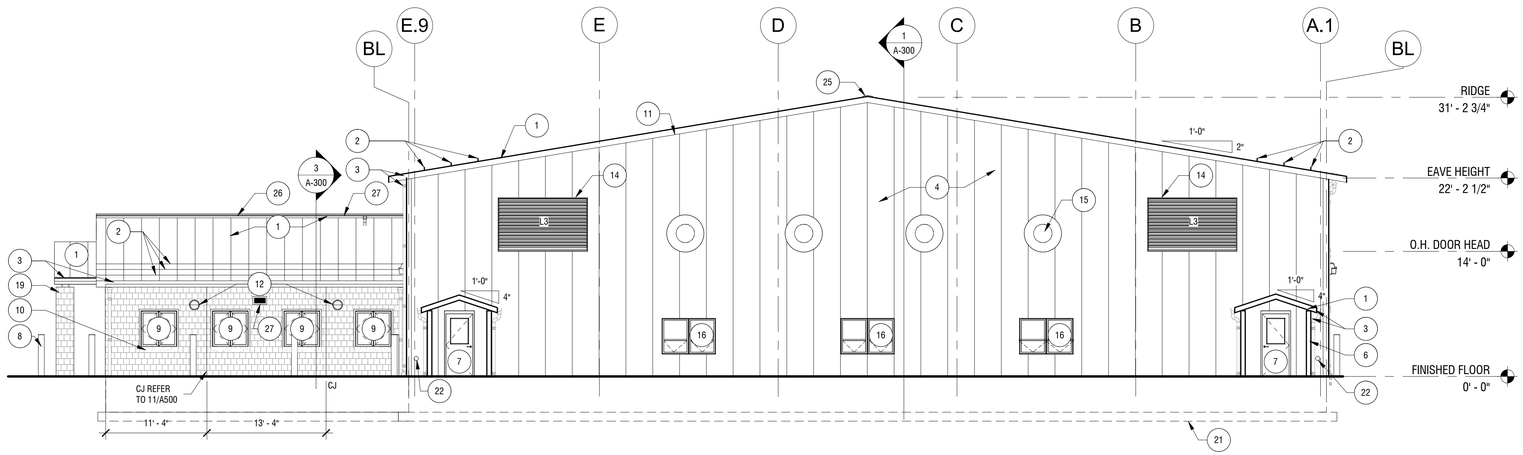

2 / A-202 EAST ELEVATION
SCALE: 1/8" = 1'-0"

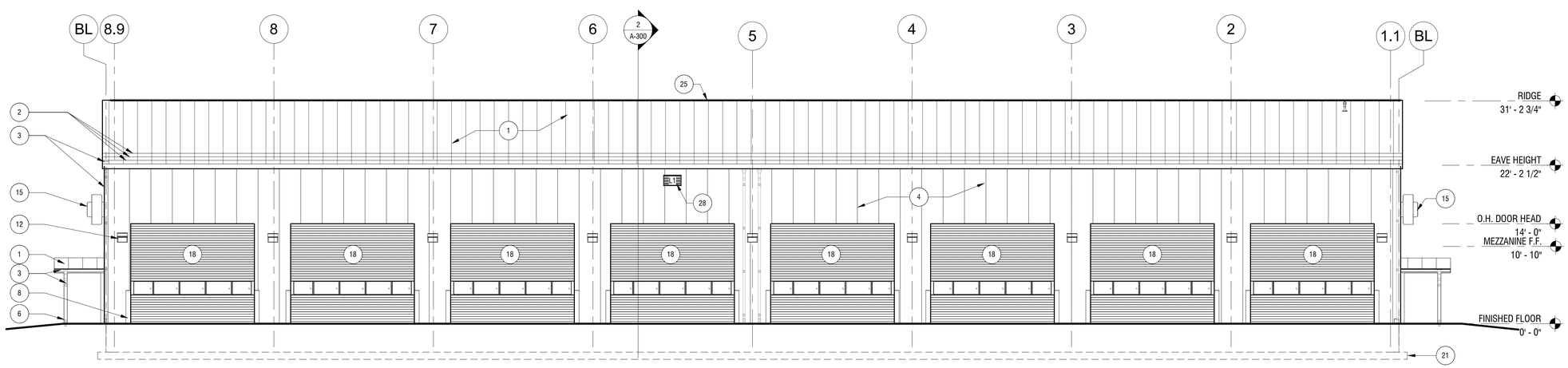

1 / A-202 NORTH ELEVATION
SCALE: 1/8" = 1'-0"

NEW YORK STATE OF OPPORTUNITY. Office of General Services
DESIGN & CONSTRUCTION

CONSULTANT:
LaBella Powered by partnership.

WARNING:
THE ALTERATION OF THIS MATERIAL IN ANY WAY, UNLESS DONE UNDER THE DIRECTION OF A COMPARABLE PROFESSIONAL, I.E. ARCHITECT FOR AN ARCHITECT, ENGINEER FOR AN ENGINEER OR LANDSCAPE ARCHITECT FOR A LANDSCAPE ARCHITECT, IS A VIOLATION OF THE NEW YORK STATE EDUCATION LAW AND/OR REGULATIONS AND IS A CLASS 'A' MISDEMEANOR.

REGISTERED ARCHITECT DAVID L. WELLS 037599 STATE OF NEW YORK
03/20/2020

CONTRACT:
CONSTRUCTION

TITLE:
PROVIDE SUB-HEADQUARTERS BUILDING

LOCATION:
DOT REGION 8, DUTCHESS COUNTY
205 LIME KILN RD.
EAST FISHKILL, NEW YORK

CLIENT:
NEW YORK STATE DEPARTMENT OF TRANSPORTATION

MARK	DATE	DESCRIPTION
	10/17/2019	BID DOCUMENTS

PROJECT NUMBER:	45552-C
DESIGNED BY:	DMD
DRAWN BY:	DMD
FIELD CHECK:	
APPROVED:	

SHEET TITLE:
EXTERIOR ELEVATIONS

DRAWING NUMBER:
A-202

2/28/2020 2:19:51 PM
C:\Users\Shackett\Documents\Revit Local Files\2018 DOT Sub Headquarter Bldg_shackett.rvt
36x24 PLOT SHEET

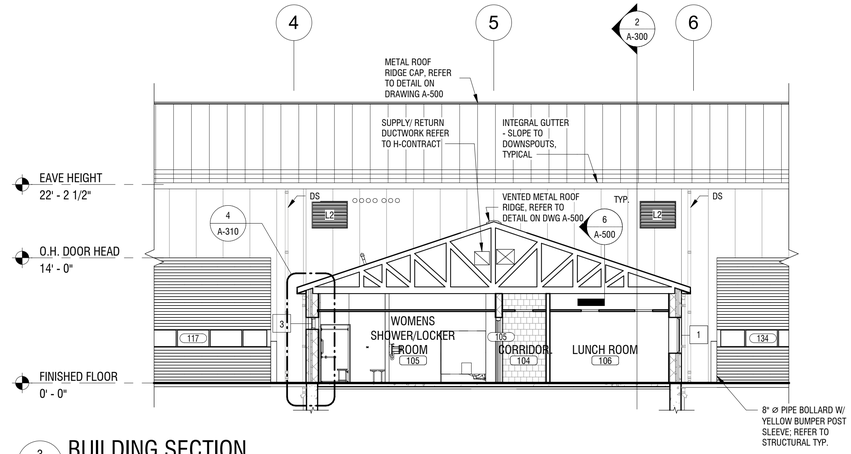

3 A-300 BUILDING SECTION
SCALE: 1/8" = 1'-0"

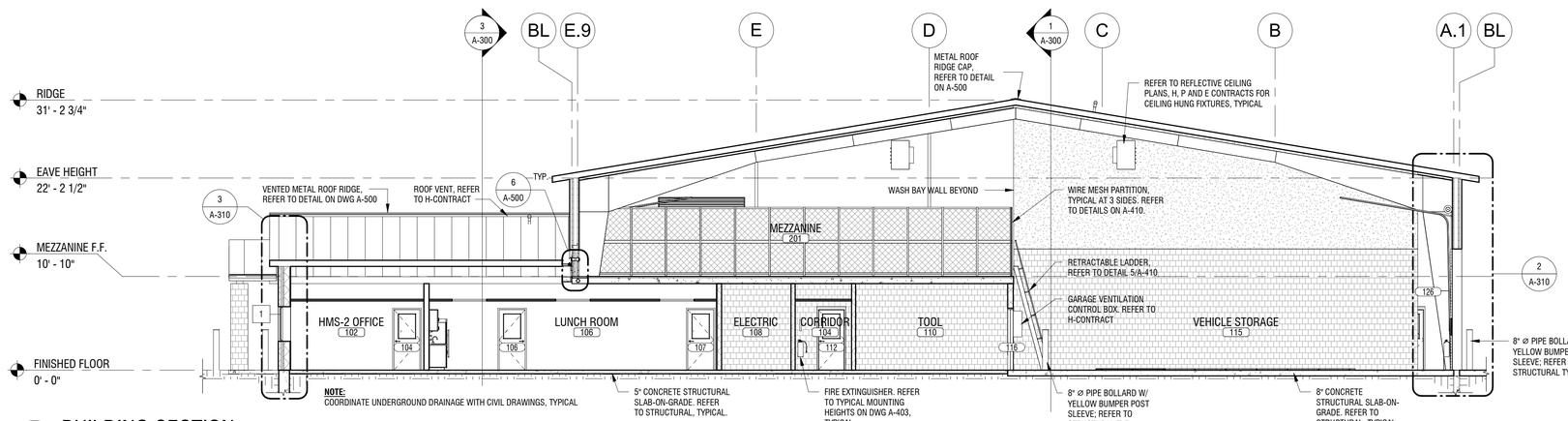

2 A-300 BUILDING SECTION
SCALE: 1/8" = 1'-0"

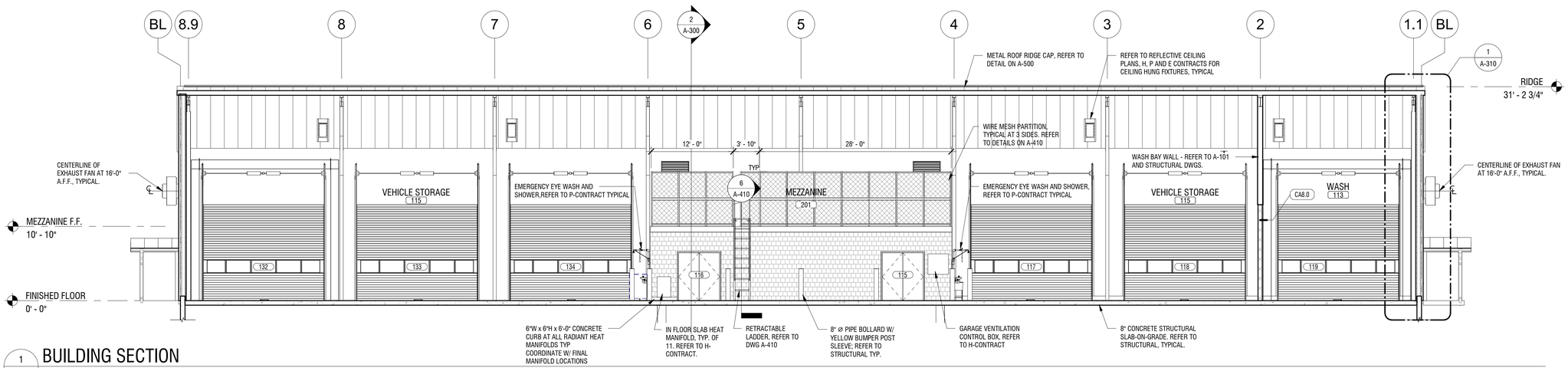

1 A-300 BUILDING SECTION
SCALE: 1/8" = 1'-0"

NEW YORK STATE OF OPPORTUNITY. Office of General Services
DESIGN & CONSTRUCTION

CONSULTANT:

LaBella
Powered by partnership.

WARNING:
THE ALTERATION OF THIS MATERIAL IN ANY WAY, UNLESS DONE UNDER THE DIRECTION OF A COMPARABLE PROFESSIONAL, I.E. ARCHITECT FOR AN ARCHITECT, ENGINEER FOR AN ENGINEER OR LANDSCAPE ARCHITECT FOR A LANDSCAPE ARCHITECT, IS A VIOLATION OF THE NEW YORK STATE EDUCATION LAW AND/OR REGULATIONS AND IS A CLASS 'A' MISDEMEANOR.

REGISTERED ARCHITECT DAVID L. WELLS 037599 STATE OF NEW YORK
03/20/2020

CONTRACT:
CONSTRUCTION

TITLE:
PROVIDE SUB-HEADQUARTERS BUILDING

LOCATION:
DOT REGION 8, DUTCHESS COUNTY
205 LIME KILN RD.
EAST FISHKILL, NEW YORK

CLIENT:
NEW YORK STATE DEPARTMENT OF TRANSPORTATION

MARK	DATE	DESCRIPTION
	10/17/2019	BID DOCUMENTS

PROJECT NUMBER:	45552-C
DESIGNED BY:	DMD
DRAWN BY:	DMD
FIELD CHECK:	Checker
APPROVED:	Approver

SHEET TITLE:
BUILDING SECTIONS

DRAWING NUMBER:
A-300

2/28/2020 2:19:57 PM
C:\Users\Shackett\Documents\Revit Local Files\2018 DOT Sub Headquarter Bldg_shackett.rvt
36x24 PLOT SHEET

NOTES:

1. PROVIDE 1" - 25 GAUGE GALVANIZED TYPE Z FURRING MEMBERS AT 24" ON CENTER. ATTACHED PERPENDICULAR TO THE BOTTOM OF EACH PURLIN AND FRONT EDGE OF EACH GIRT, WITH 1/4" X 8" X 5/8" SELF DRILLING FASTENERS AT EACH PURLIN OR GIRT OR APPROVED EQUAL. PROVIDE THE FULL LENGTH AND WIDTH OF CEILING, AND LENGTH AND HEIGHT OF WALL AREA FOR ATTACHMENT OF THE INTERIOR LINER PANEL.

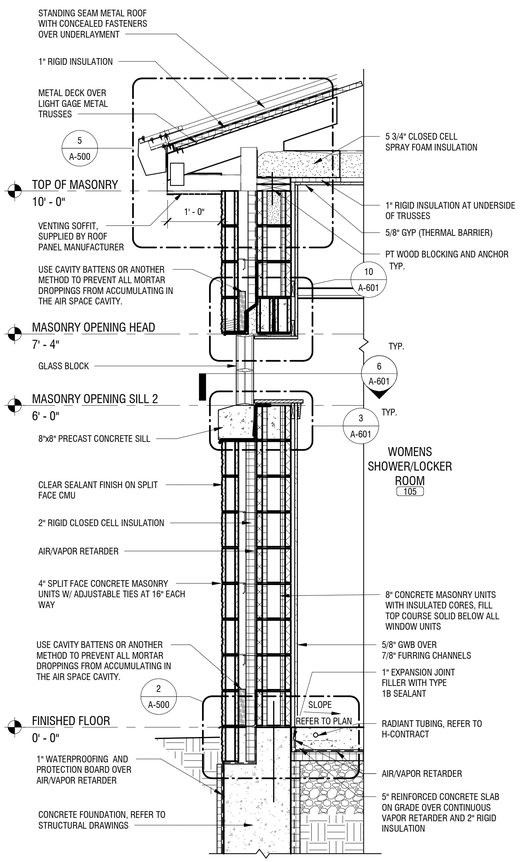

4 A-310 WALL SECTION THROUGH OFFICE
SCALE: 3/4" = 1'-0"

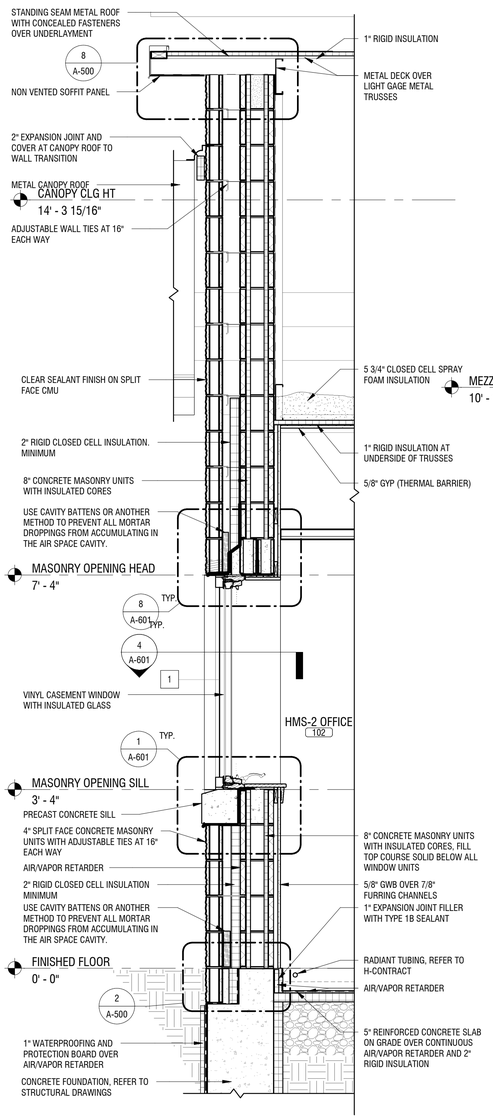

3 A-310 WALL SECTION THROUGH OFFICE GABLE END
SCALE: 3/4" = 1'-0"

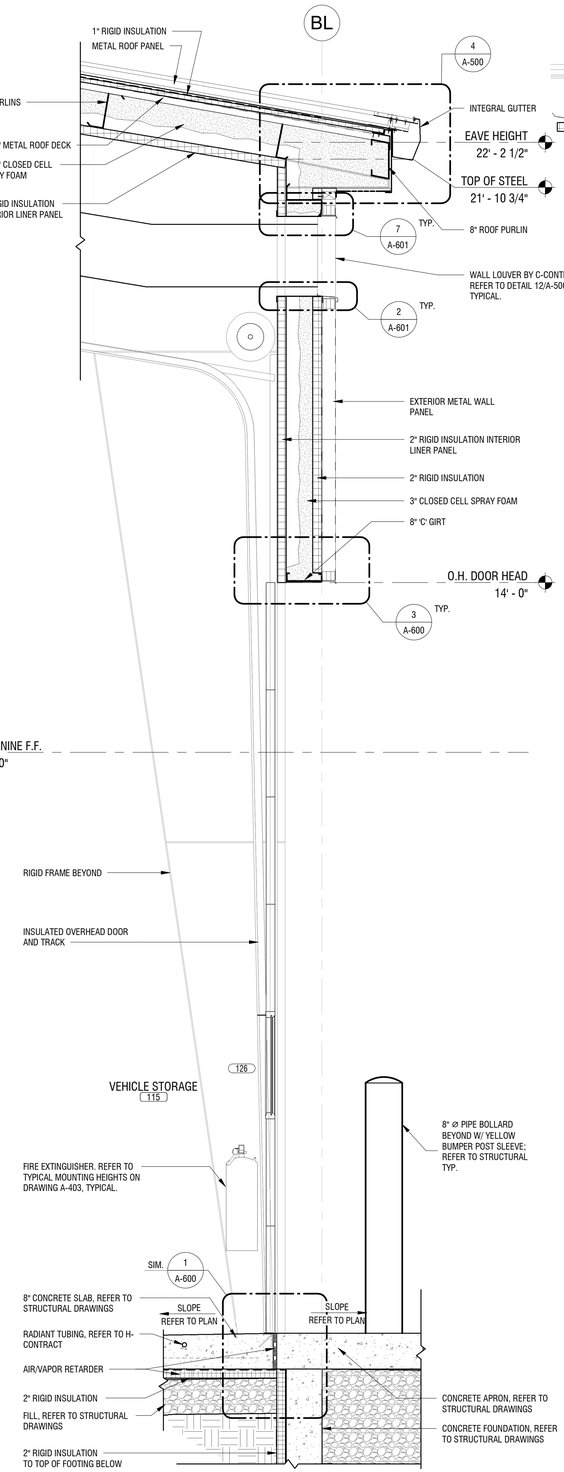

2 A-310 SIDE WALL SECTION THROUGH OVERHEAD DOOR
SCALE: 3/4" = 1'-0"

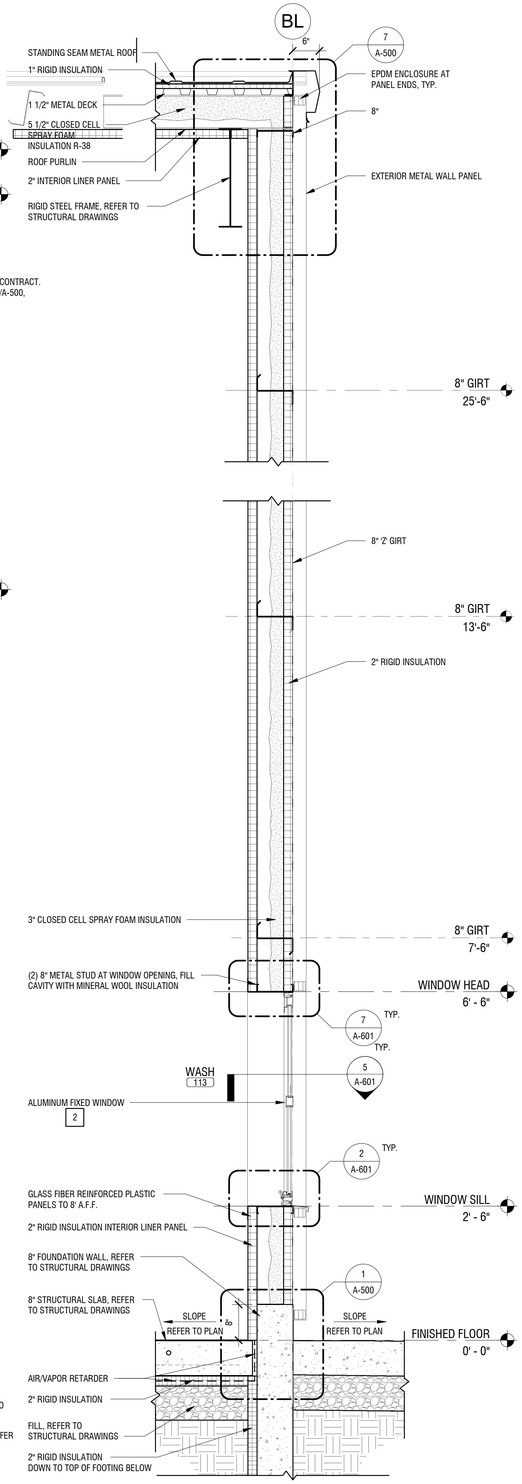

1 A-310 END WALL SECTION THROUGH METAL BUILDING
SCALE: 3/4" = 1'-0"

NEW YORK STATE OF OPPORTUNITY. Office of General Services

DESIGN & CONSTRUCTION

CONSULTANT:

LaBella Powered by partnership.

WARNING:

THE ALTERATION OF THIS MATERIAL IN ANY WAY, UNLESS DONE UNDER THE DIRECTION OF A COMPARABLE PROFESSIONAL, I.E. ARCHITECT FOR AN ARCHITECT, ENGINEER FOR AN ENGINEER OR LANDSCAPE ARCHITECT FOR A LANDSCAPE ARCHITECT, IS A VIOLATION OF THE NEW YORK STATE EDUCATION LAW AND/OR REGULATIONS AND IS A CLASS 'A' MISDEMEANOR.

REGISTERED ARCHITECT DAVID L. WELLS 037599 STATE OF NEW YORK
03/20/2020

CONTRACT: CONSTRUCTION

TITLE: PROVIDE SUB-HEADQUARTERS BUILDING

LOCATION: DOT REGION 8, DUTCHESS COUNTY 205 LIME KILN RD. EAST FISHKILL, NEW YORK

CLIENT: NEW YORK STATE DEPARTMENT OF TRANSPORTATION

MARK	DATE	DESCRIPTION
	10/17/2019	BID DOCUMENTS

PROJECT NUMBER:	45552-C
DESIGNED BY:	DMD
DRAWN BY:	DMD
FIELD CHECK:	
APPROVED:	

SHEET TITLE: WALL SECTIONS

DRAWING NUMBER: A-310

2/28/2020 2:20:01 PM
C:\Users\Shackett\Documents\Revit Local Files\2018 DOT Sub Headquarter Bldg_shackett.rvt
36x24 PLOT SHEET

GENERAL CEILING NOTES

1. REFER TO H, P AND E CONTRACTS FOR ADDITIONAL CEILING ITEMS THAT MAY NOT BE SHOWN. REFER TO VEHICLE STORAGE BUILDING REFLECTED CEILING PLAN ON DRAWING A-102.
2. PROVIDE ACT-1 IN ALL LOCATIONS WHERE ACOUSTICAL CEILING PANEL IS SHOWN UNLESS OTHERWISE NOTED.
3. SUSPENDED GRID CEILINGS SHALL BE 8'-0" AFF UNLESS OTHERWISE NOTED.
4. SUSPENDED GRID CEILINGS SHALL BE ARRANGED SO THAT GRID IS CENTERED IN ROOM WITH NO TILES LESS THAN 6" UNLESS OTHERWISE INDICATED.

LEGEND

- LIGHTING - RECESSED CEILING FIXTURE (REFER TO E-CONTRACT FOR TYPE)
- LIGHTING - PENDENT FIXTURE (REFER TO E-CONTRACT FOR TYPE)
- LIGHTING - RECESSED CAN FIXTURE (REFER TO E-CONTRACT)
- SMOKE DETECTOR - CEILING MOUNTED (REFER TO E-CONTRACT)
- HVAC SUPPLY (REFER TO H-CONTRACT)
- HVAC RETURN (REFER TO H-CONTRACT)
- RECESSED PENDENT SPRINKLER HEAD (REFER TO P-CONTRACT)
- UPRIGHT SPRINKLER HEAD (REFER TO P-CONTRACT)
- SINGLE FACE EXIT SIGN (REFER TO E-CONTRACT)
- DOUBLE FACE EXIT SIGN (REFER TO E-CONTRACT)
- OCCUPANCY CENSOR

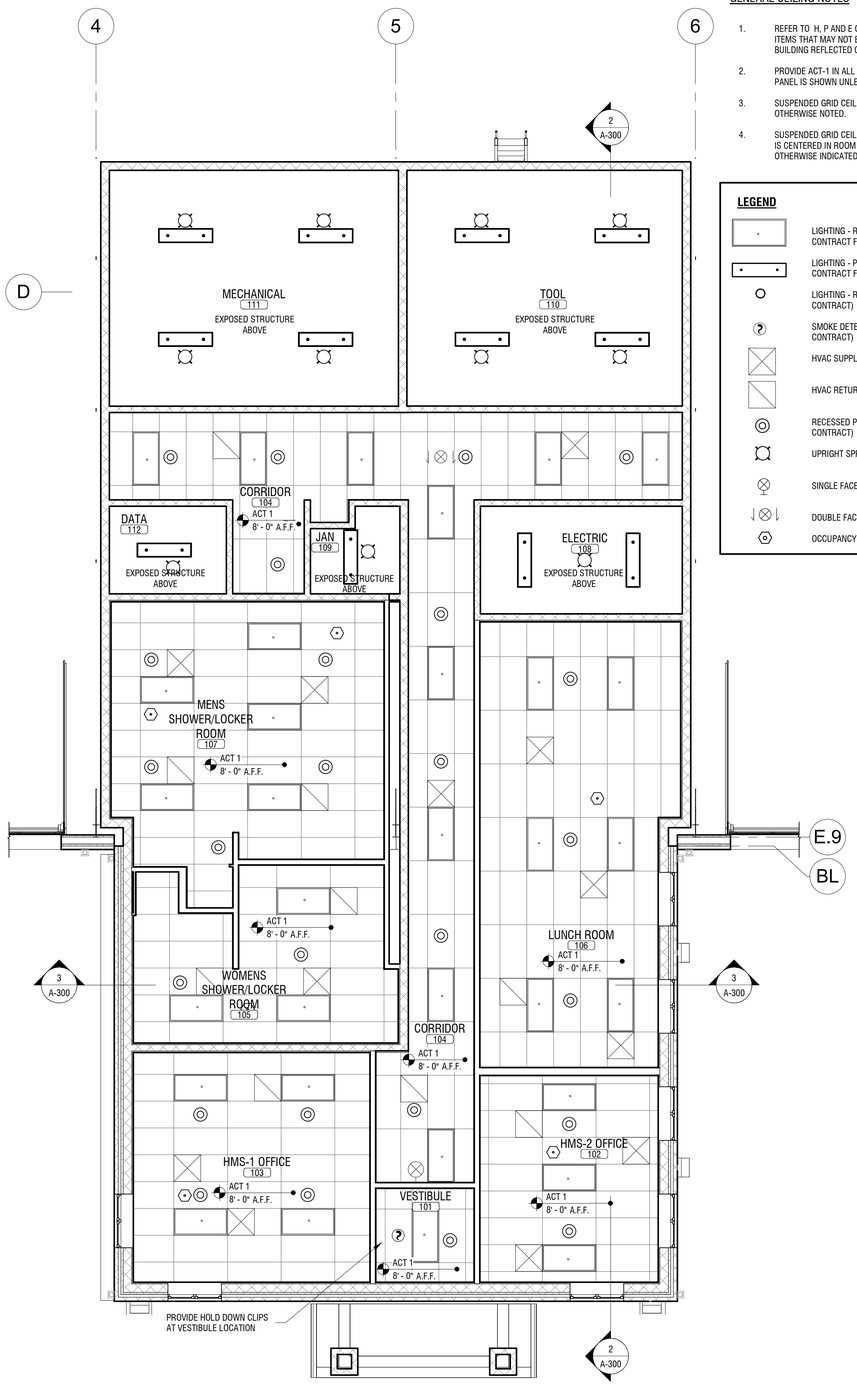

2 A-401 ENLARGED OFFICE REFLECTED CEILING PLAN
SCALE: 3/16" = 1'-0"

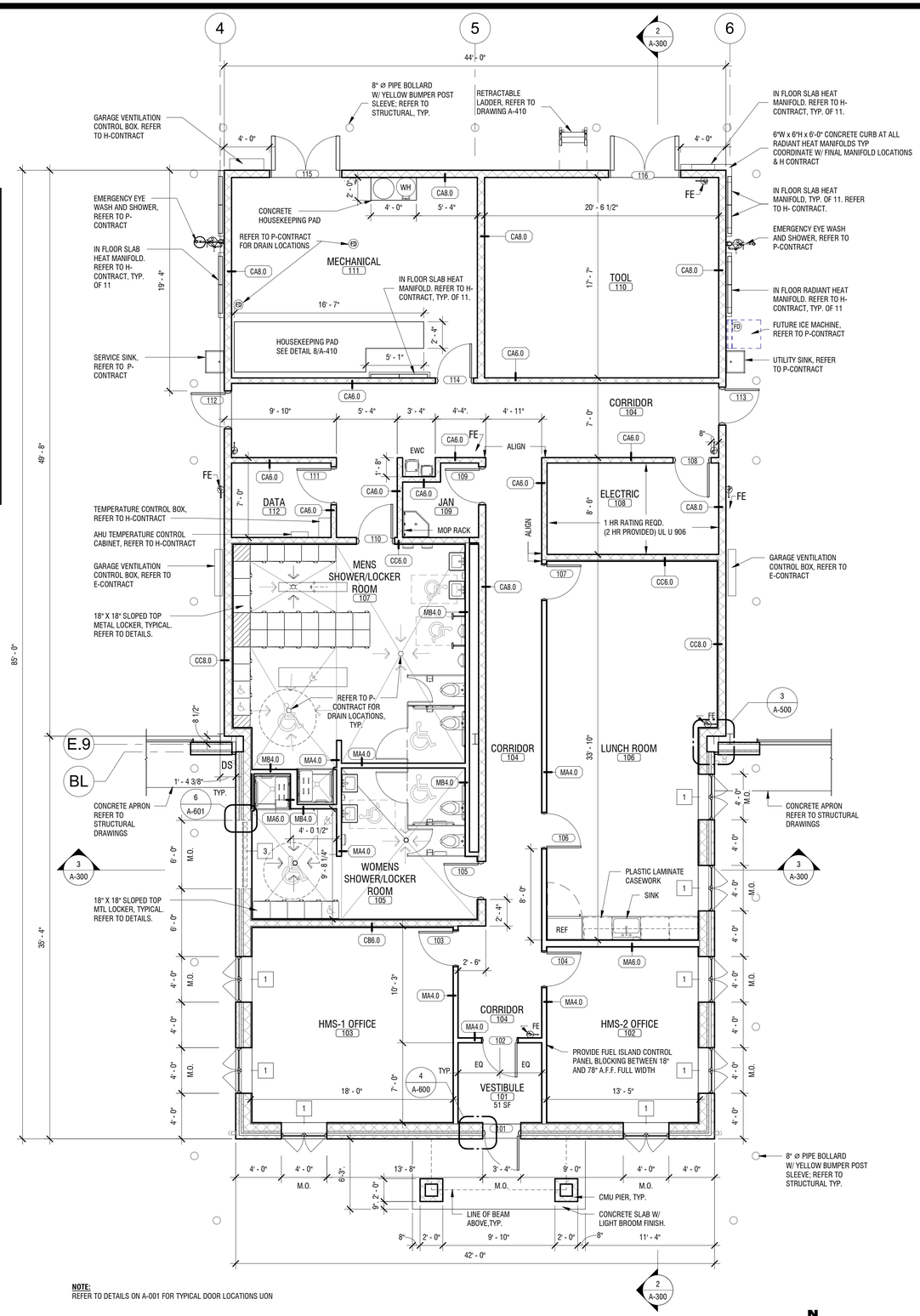

NOTE:
REFER TO DETAILS ON A-001 FOR TYPICAL DOOR LOCATIONS UON

1 A-401 ENLARGED OFFICE PLAN
SCALE: 3/16" = 1'-0"

NEW YORK STATE OF OPPORTUNITY. Office of General Services
DESIGN & CONSTRUCTION

CONSULTANT:
LaBella Powered by partnership.

WARNING:
THE ALTERATION OF THIS MATERIAL IN ANY WAY, UNLESS DONE UNDER THE DIRECTION OF A COMPARABLE PROFESSIONAL, I.E. ARCHITECT FOR AN ARCHITECT, ENGINEER FOR AN ENGINEER OR LANDSCAPE ARCHITECT FOR A LANDSCAPE ARCHITECT, IS A VIOLATION OF THE NEW YORK STATE EDUCATION LAW AND/OR REGULATIONS AND IS A CLASS 'A' MISDEMEANOR.

REGISTERED ARCHITECT DAVID L. WELLS 037599 STATE OF NEW YORK
03/20/2020

CONTRACT: CONSTRUCTION

TITLE: PROVIDE SUB-HEADQUARTERS BUILDING

LOCATION: DOT REGION 8, DUTCHESS COUNTY 205 LIME KILN RD. EAST FISHKILL, NEW YORK

CLIENT: NEW YORK STATE DEPARTMENT OF TRANSPORTATION

MARK	DATE	DESCRIPTION
	10/17/2019	BID DOCUMENTS

PROJECT NUMBER:	45552-C
DESIGNED BY:	DMD
DRAWN BY:	DMD
FIELD CHECK:	
APPROVED:	

SHEET TITLE: ENLARGED OFFICE PLAN AND REFLECTED CEILING PLAN

DRAWING NUMBER: A-401

2/28/2020 2:20:05 PM
C:\Users\Shackett\Documents\Revit Local Files\2018 DOT Sub Headquarter Bldg_shackett.rvt
36x24 PLOT SHEET

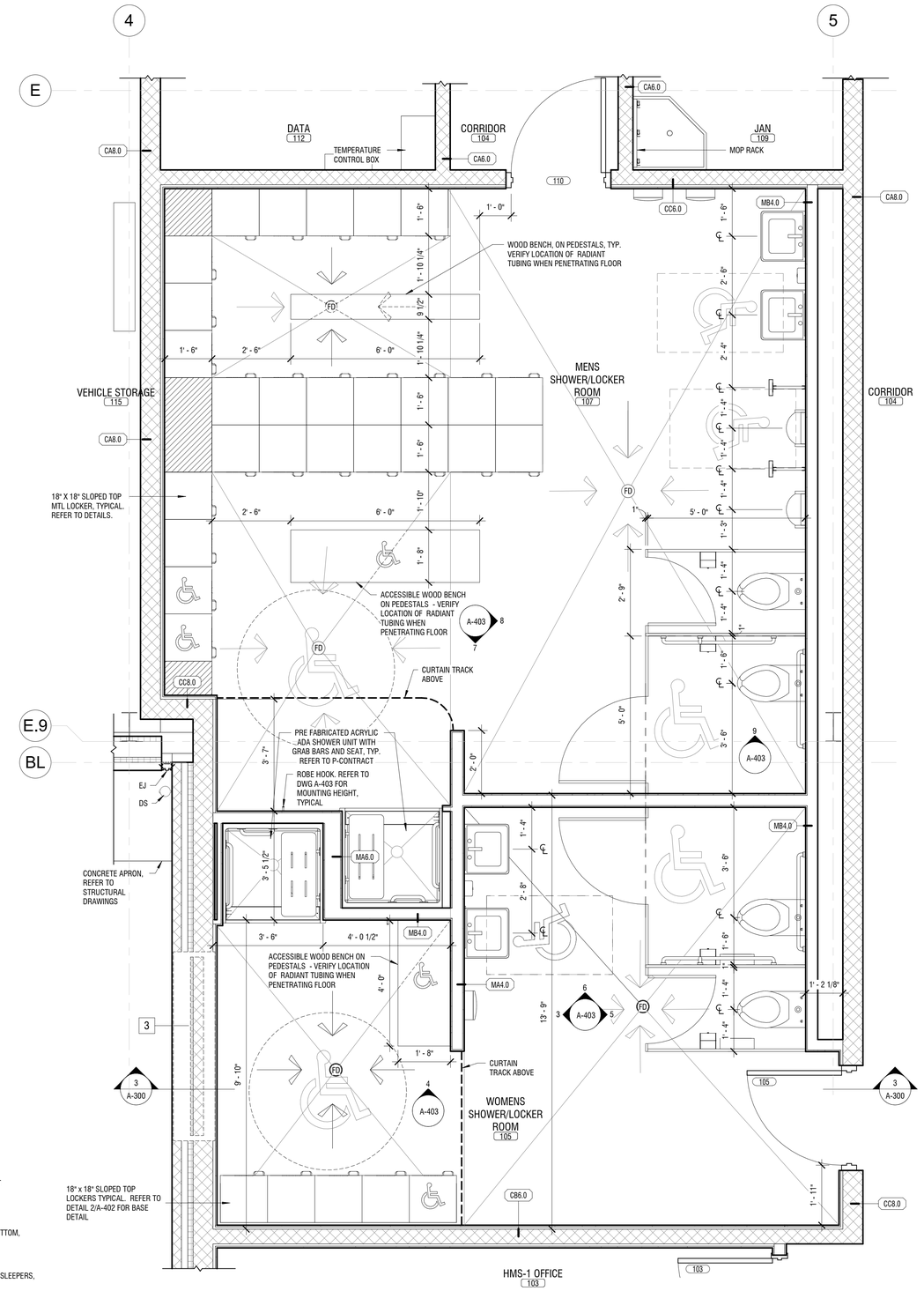

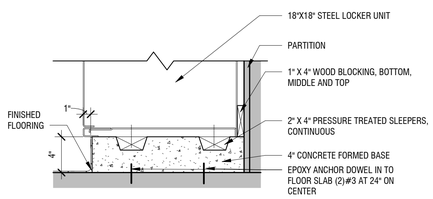

2 / A-402 LOCKER BASE DETAIL
SCALE: 1 1/2" = 1'-0"

3 / A-402 ENLARGED TOILET ROOMS PLAN
SCALE: 1/2" = 1'-0"

NEW YORK STATE OF OPPORTUNITY. Office of General Services
DESIGN & CONSTRUCTION

CONSULTANT:
LaBella Powered by partnership.

WARNING:
THE ALTERATION OF THIS MATERIAL IN ANY WAY, UNLESS DONE UNDER THE DIRECTION OF A COMPARABLE PROFESSIONAL, I.E. ARCHITECT FOR AN ARCHITECT, ENGINEER FOR AN ENGINEER OR LANDSCAPE ARCHITECT FOR A LANDSCAPE ARCHITECT, IS A VIOLATION OF THE NEW YORK STATE EDUCATION LAW AND/OR REGULATIONS AND IS A CLASS 'A' MISDEMEANOR.

REGISTERED ARCHITECT DAVID L. WELLS 037599 STATE OF NEW YORK
03/20/2020

CONTRACT: CONSTRUCTION

TITLE: PROVIDE SUB-HEADQUARTERS BUILDING

LOCATION: DOT REGION 8, DUTCHESS COUNTY
205 LIME KILN RD.
EAST FISHKILL, NEW YORK

CLIENT: NEW YORK STATE DEPARTMENT OF TRANSPORTATION

MARK	DATE	DESCRIPTION
	10/17/2019	BID DOCUMENTS

PROJECT NUMBER:	45552-C
DESIGNED BY:	DMD
DRAWN BY:	DMD
FIELD CHECK:	
APPROVED:	

SHEET TITLE: ENLARGED TOILET ROOMS PLAN

DRAWING NUMBER: A-402

2/28/2020 2:20:08 PM
C:\Users\SHackett\Documents\Revit Local Files\2018 DOT Sub Headquarter Bldg_shackett.rvt
36x24 PLOT SHEET

NOTES:
1. PROVIDE ADEQUATE BLOCKING NECESSARY TO MOUNT ALL FIXTURES
2. REFER TO P-CONTRACT FOR PLUMBING DETAILS

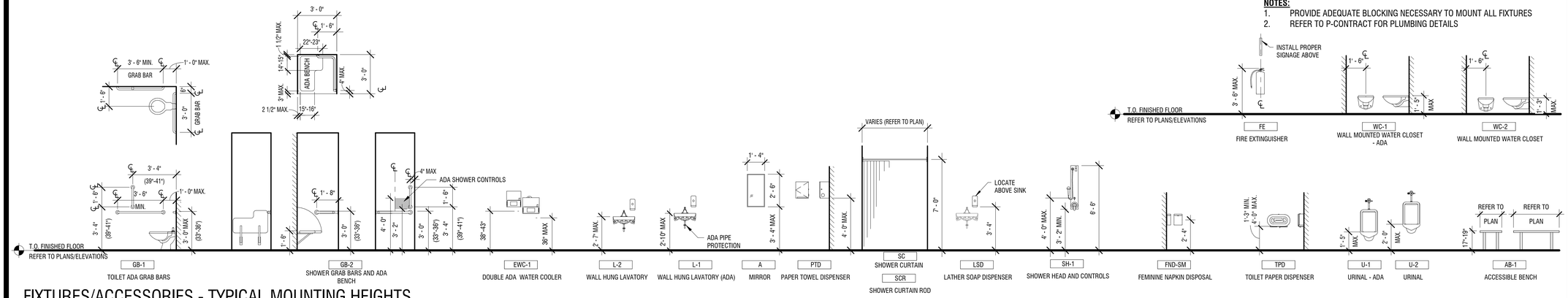

FIXTURES/ACCESSORIES - TYPICAL MOUNTING HEIGHTS

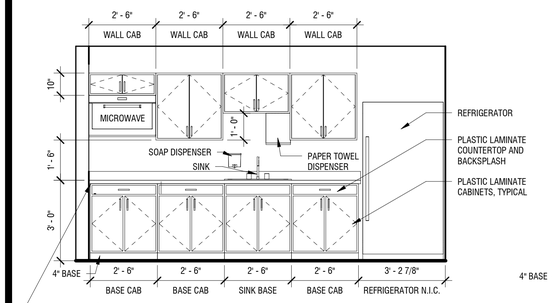

NOTE:
PROVIDE SEPARATE COUNTERTOP AND BACKSPLASH AT LEFT MOST BASE CABINET

10 A-403 LUNCH ROOM ELEVATION
SCALE: 3/8" = 1'-0"

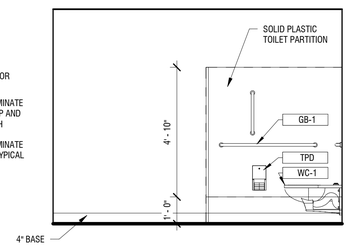

9 A-403 MEN'S TOILET
SCALE: 3/8" = 1'-0"

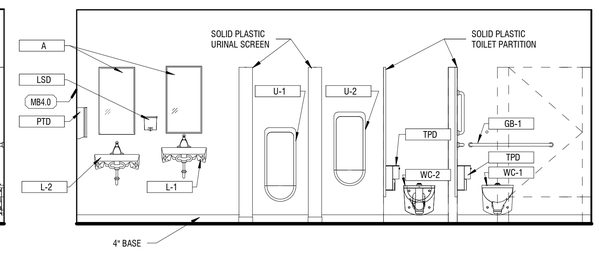

8 A-403 MEN'S RESTROOM AT LOCKER ROOM
SCALE: 3/8" = 1'-0"

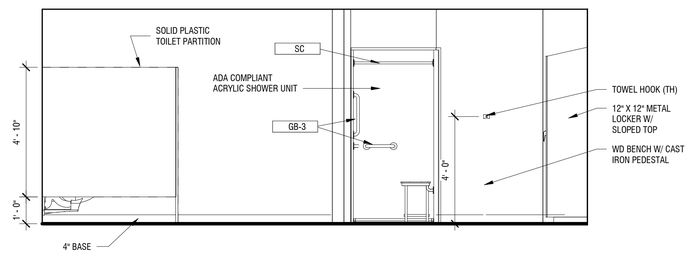

7 A-403 MEN'S SHOWER AT LOCKER ROOM
SCALE: 3/8" = 1'-0"

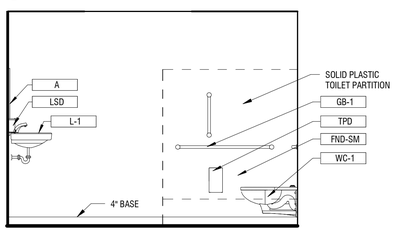

6 A-403 WOMEN'S TOILET
SCALE: 3/8" = 1'-0"

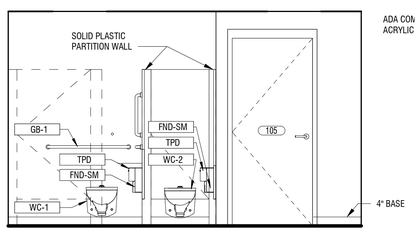

5 A-403 WOMEN'S RESTROOM AT LOCKER ROOM
SCALE: 3/8" = 1'-0"

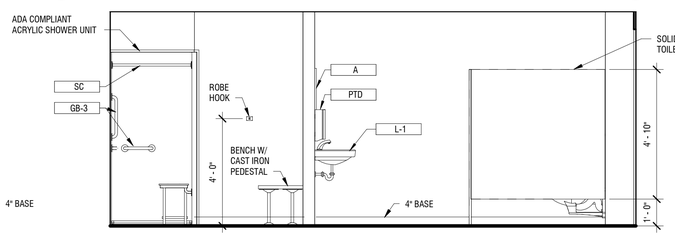

4 A-403 WOMEN'S SHOWER AT LOCKER ROOM
SCALE: 3/8" = 1'-0"

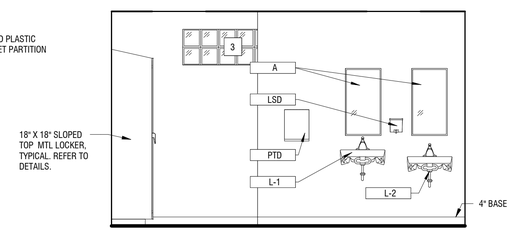

3 A-403 WOMEN'S RESTROOM AT LOCKER ROOM
SCALE: 3/8" = 1'-0"

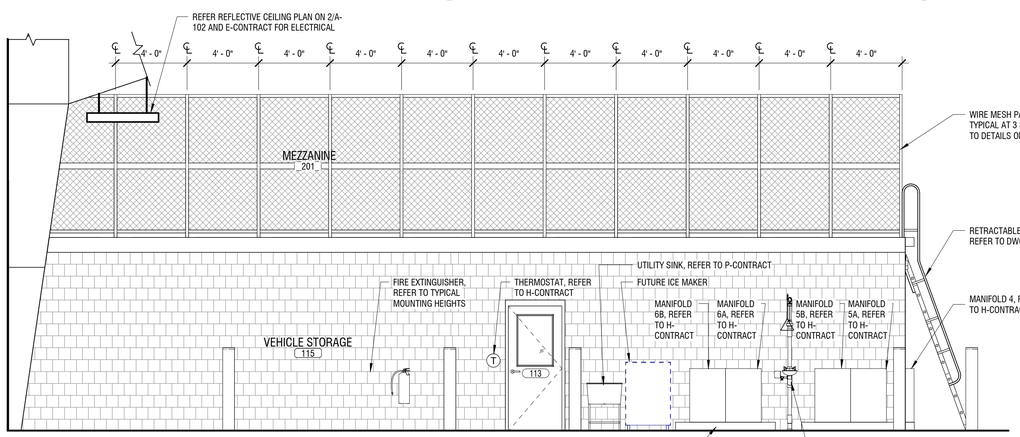

2 A-403 INTERIOR ELEVATION AT MEZZANINE
SCALE: 1/4" = 1'-0"

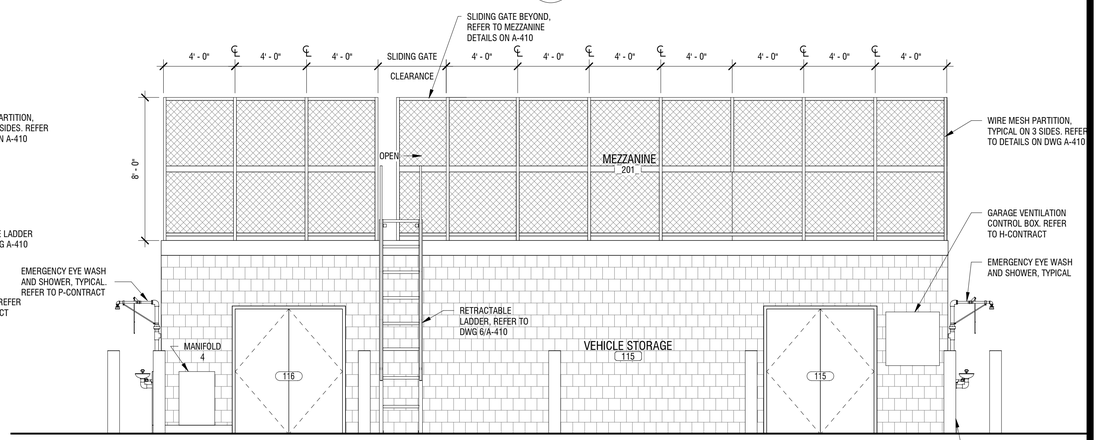

1 A-403 INTERIOR ELEVATION AT MEZZANINE
SCALE: 1/4" = 1'-0"

2/28/2020 2:20:13 PM
C:\Users\Shackett\Documents\Revit Local Files\2018 DOT Sub Headquarter Bldg_shackett.rvt
36x24 PLOT SHEET

NEW YORK STATE OF OPPORTUNITY. Office of General Services
DESIGN & CONSTRUCTION

CONSULTANT:
LaBella Powered by partnership.

WARNING:
THE ALTERATION OF THIS MATERIAL IN ANY WAY, UNLESS DONE UNDER THE DIRECTION OF A COMPARABLE PROFESSIONAL, I.E. ARCHITECT FOR AN ARCHITECT, ENGINEER FOR AN ENGINEER OR LANDSCAPE ARCHITECT FOR A LANDSCAPE ARCHITECT, IS A VIOLATION OF THE NEW YORK STATE EDUCATION LAW AND/OR REGULATIONS AND IS A CLASS 'A' MISDEMEANOR.

REGISTERED ARCHITECT DAVID L. WELLS 037599 STATE OF NEW YORK
03/20/2020

CONTRACT: CONSTRUCTION

TITLE: PROVIDE SUB-HEADQUARTERS BUILDING

LOCATION: DOT REGION 8, DUTCHESS COUNTY
205 LIME KILN RD.
EAST FISHKILL, NEW YORK

CLIENT: NEW YORK STATE DEPARTMENT OF TRANSPORTATION

MARK	DATE	DESCRIPTION
	10/17/2019	BID DOCUMENTS

PROJECT NUMBER:	45552-C
DESIGNED BY:	DMD
DRAWN BY:	DMD
FIELD CHECK:	
APPROVED:	

SHEET TITLE: INTERIOR ELEVATIONS AND DETAILS

DRAWING NUMBER: A-403

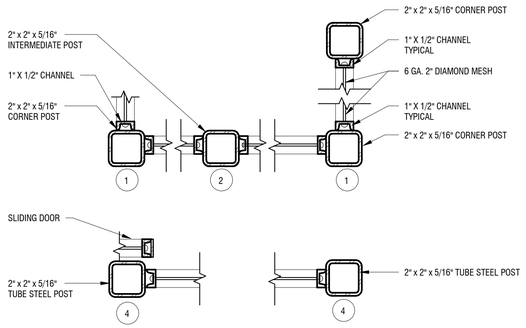

7 A-410 WIRE MESH PANEL DETAILS
SCALE: 3" = 1'-0"

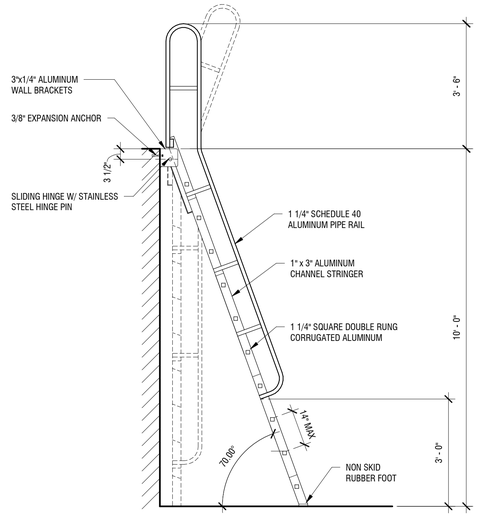

6 A-410 RETRACTABLE LADDER DETAIL
SCALE: 1/2" = 1'-0"

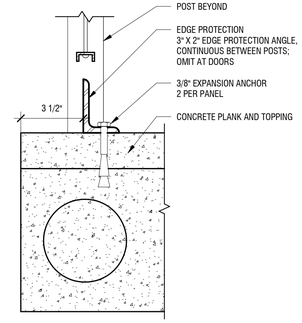

5 A-410 EDGE PROTECTION DETAIL
SCALE: 3" = 1'-0"

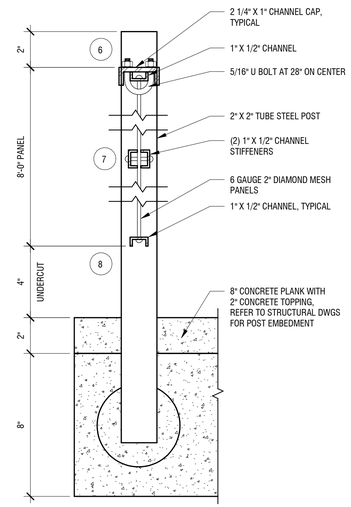

4 A-410 TYPICAL WIRE MESH PANEL SECTION
SCALE: 3" = 1'-0"

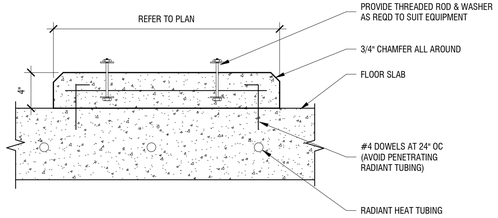

8 A-410 TYPICAL INTERIOR EQUIPMENT PAD DETAIL
SCALE: 1 1/2" = 1'-0"

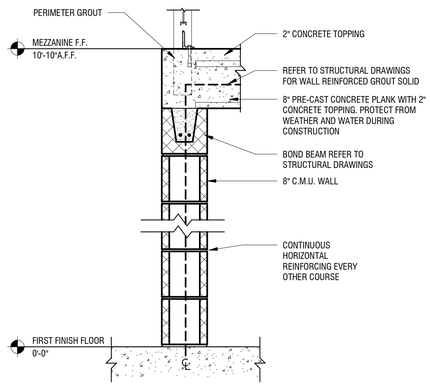

3 A-410 MEZZANINE WALL SECTION
SCALE: 1" = 1'-0"

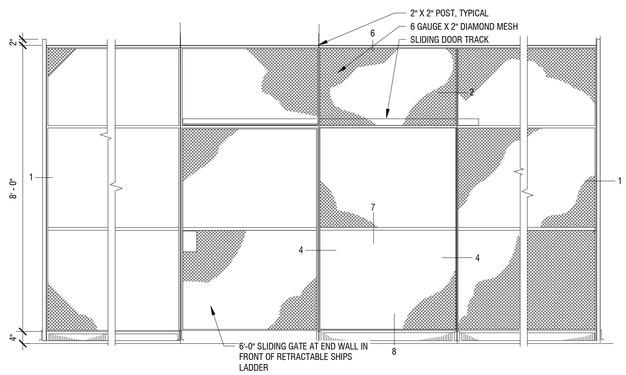

2 A-410 MEZZANINE WIRE MESH ELEVATION
NOT TO SCALE

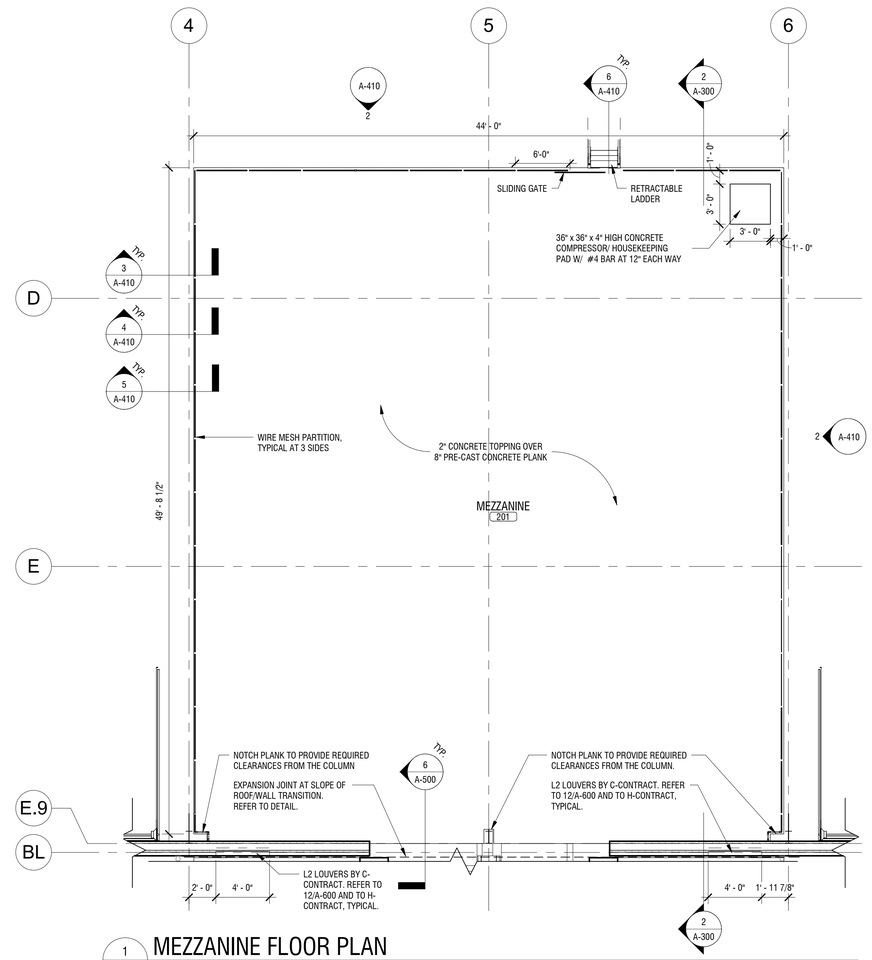

1 A-410 MEZZANINE FLOOR PLAN
SCALE: 3/16" = 1'-0"

NEW YORK STATE OF OPPORTUNITY. Office of General Services
DESIGN & CONSTRUCTION

CONSULTANT:
LaBella Powered by partnership.

WARNING:
THE ALTERATION OF THIS MATERIAL IN ANY WAY, UNLESS DONE UNDER THE DIRECTION OF A COMPARABLE PROFESSIONAL, I.E. ARCHITECT FOR AN ARCHITECT, ENGINEER FOR AN ENGINEER OR LANDSCAPE ARCHITECT FOR A LANDSCAPE ARCHITECT, IS A VIOLATION OF THE NEW YORK STATE EDUCATION LAW AND/OR REGULATIONS AND IS A CLASS 'A' MISDEMEANOR.

REGISTERED ARCHITECT DAVID L. WELLS 037599 STATE OF NEW YORK
03/20/2020

CONTRACT: CONSTRUCTION

TITLE: PROVIDE SUB-HEADQUARTERS BUILDING

LOCATION: DOT REGION 8, DUTCHESS COUNTY 205 LIME KILN RD. EAST FISHKILL, NEW YORK

CLIENT: NEW YORK STATE DEPARTMENT OF TRANSPORTATION

MARK	DATE	DESCRIPTION
	10/17/2019	BID DOCUMENTS

PROJECT NUMBER:	45552-C
DESIGNED BY:	DMD
DRAWN BY:	DMD
FIELD CHECK:	
APPROVED:	

SHEET TITLE: MEZZANINE PLAN AND DETAILS

DRAWING NUMBER: A-410

2/28/2020 2:20:16 PM
C:\Users\SHackett\Documents\Revit Local Files\2018 DOT Sub Headquarter Bldg_shackett.rvt
36x24 PLOT SHEET

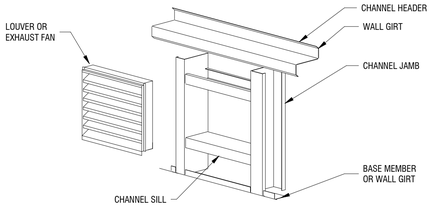

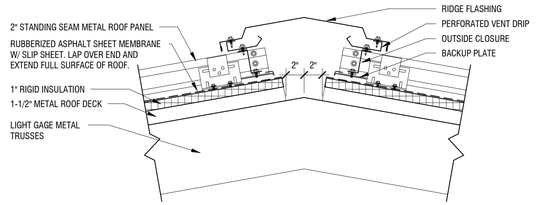

11 A-500 METAL ROOF VENTED RIDGE
SCALE: 1 1/2" = 1'-0"

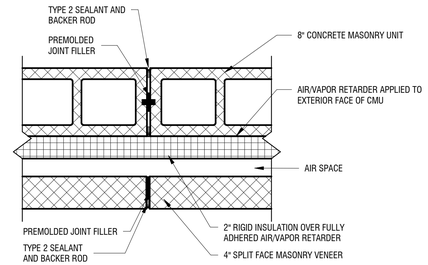

10 A-500 MASONRY CONTROL JOINT DETAIL
SCALE: 1 1/2" = 1'-0"

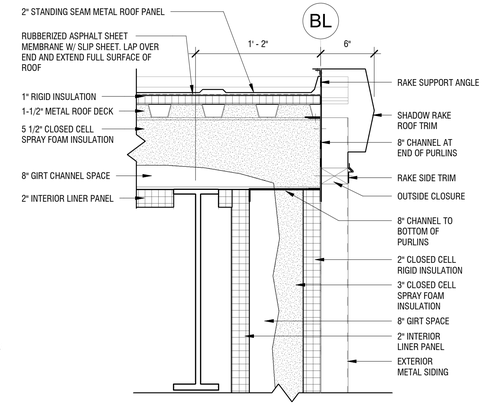

7 A-500 RAKE DETAIL AT METAL SIDING
SCALE: 1 1/2" = 1'-0"

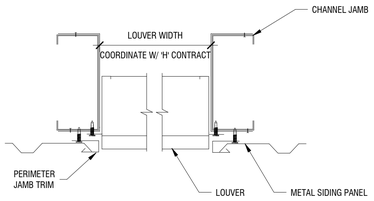

12 A-500 LOUVER & WALL EXHAUST FAN MOUNTING DETAIL
SCALE: 1" = 1'-0"

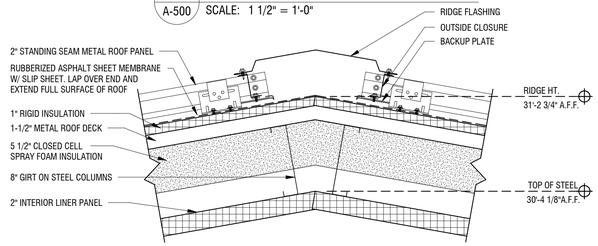

9 A-500 METAL ROOF RIDGE CAP
SCALE: 1 1/2" = 1'-0"

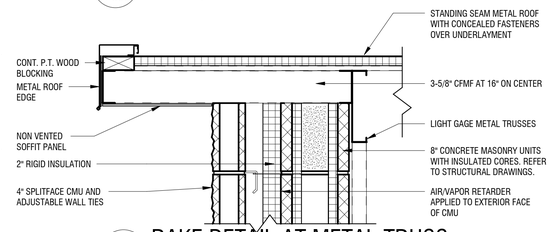

8 A-500 RAKE DETAIL AT METAL TRUSS
SCALE: 1 1/2" = 1'-0"

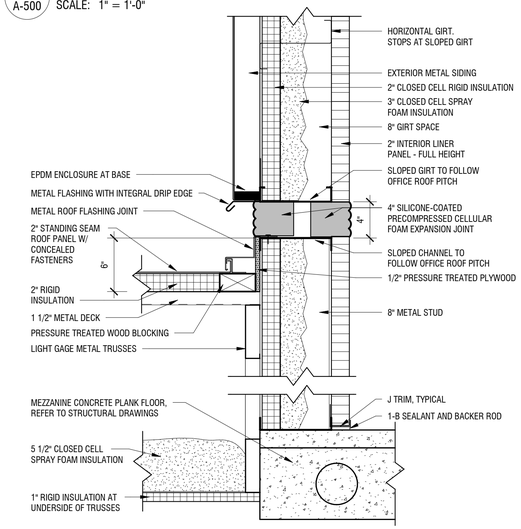

6 A-500 EXPANSION JOINT AT ROOF TO WALL
SCALE: 1 1/2" = 1'-0"

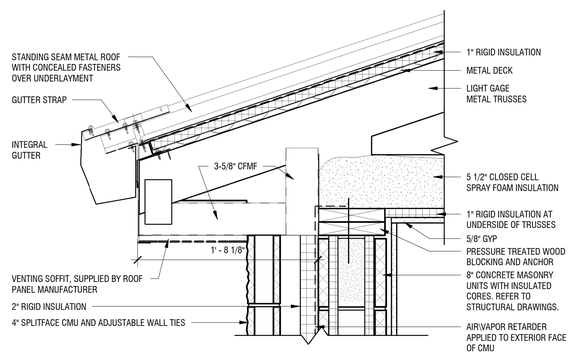

5 A-500 OVERHANG DETAIL THROUGH OFFICE
SCALE: 1 1/2" = 1'-0"

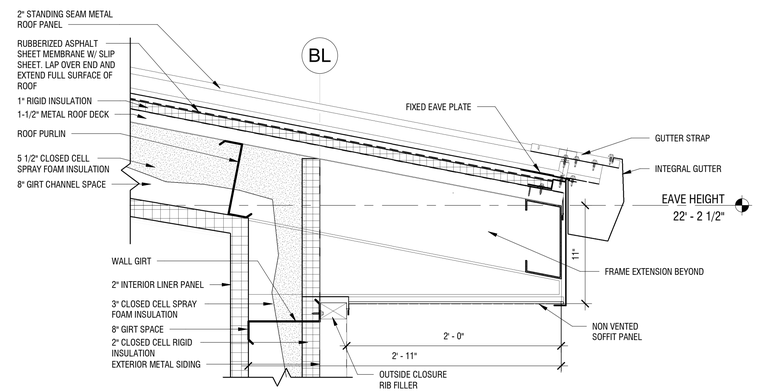

4 A-500 EAVE OVERHANG AT METAL BUILDING
SCALE: 1 1/2" = 1'-0"

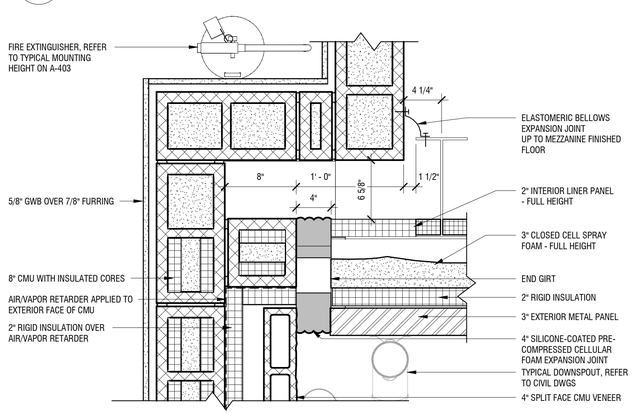

3 A-500 EXPANSION JOINT AT METAL BUILDING AND OFFICE
SCALE: 1 1/2" = 1'-0"

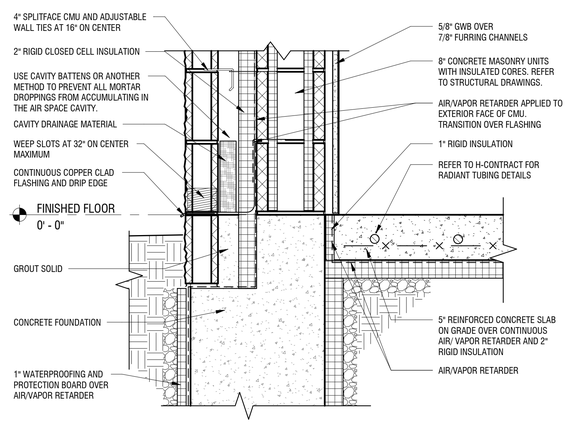

2 A-500 BASE DETAIL AT MASONRY WALL
SCALE: 1 1/2" = 1'-0"

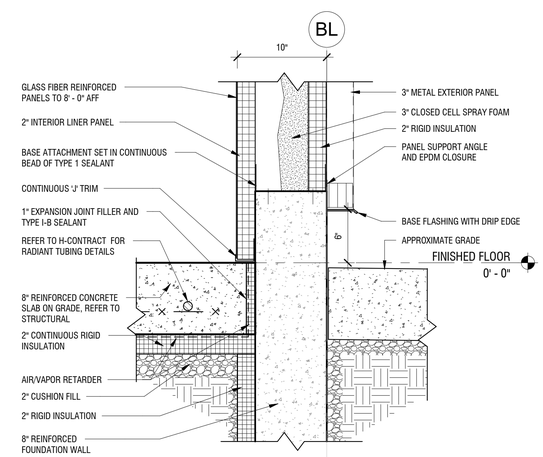

1 A-500 BASE DETAIL AT METAL SIDING
SCALE: 1 1/2" = 1'-0"

2/28/2020 2:20:21 PM
C:\Users\Shackett\Documents\Revit Local Files\2018 DOT Sub Headquarter Bldg_shackett.rvt
36x24 PLOT SHEET

NEW YORK STATE OF OPPORTUNITY. Office of General Services
DESIGN & CONSTRUCTION

CONSULTANT:
LaBella Powered by partnership.

WARNING:
THE ALTERATION OF THIS MATERIAL IN ANY WAY, UNLESS DONE UNDER THE DIRECTION OF A COMPARABLE PROFESSIONAL, I.E. ARCHITECT FOR AN ARCHITECT, ENGINEER FOR AN ENGINEER OR LANDSCAPE ARCHITECT FOR A LANDSCAPE ARCHITECT, IS A VIOLATION OF THE NEW YORK STATE EDUCATION LAW AND/OR REGULATIONS AND IS A CLASS 'A' MISDEMEANOR.

REGISTERED ARCHITECT DAVID L. WELLS 037599 STATE OF NEW YORK
03/20/2020

CONTRACT: CONSTRUCTION

TITLE: PROVIDE SUB-HEADQUARTERS BUILDING

LOCATION: DOT REGION 8, DUTCHESS COUNTY
205 LIME KILN RD.
EAST FISHKILL, NEW YORK

CLIENT: NEW YORK STATE DEPARTMENT OF TRANSPORTATION

MARK	DATE	DESCRIPTION
	10/17/2019	BID DOCUMENTS

PROJECT NUMBER: 45552-C
DESIGNED BY: DMD
DRAWN BY: DMD
FIELD CHECK:
APPROVED:

SHEET TITLE: DETAILS

DRAWING NUMBER: A-500

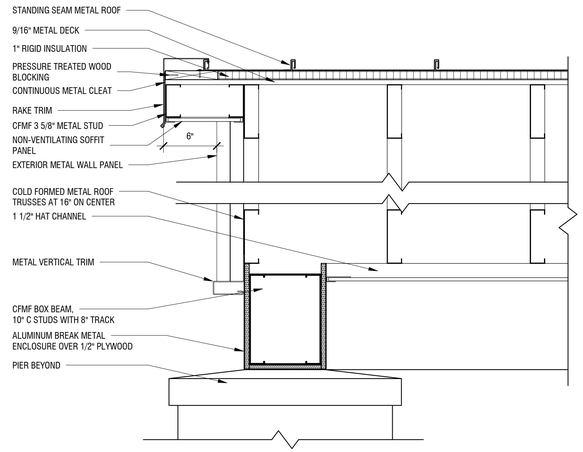

5 / A-501 CANOPY GABLE DETAIL
SCALE: 1 1/2" = 1'-0"

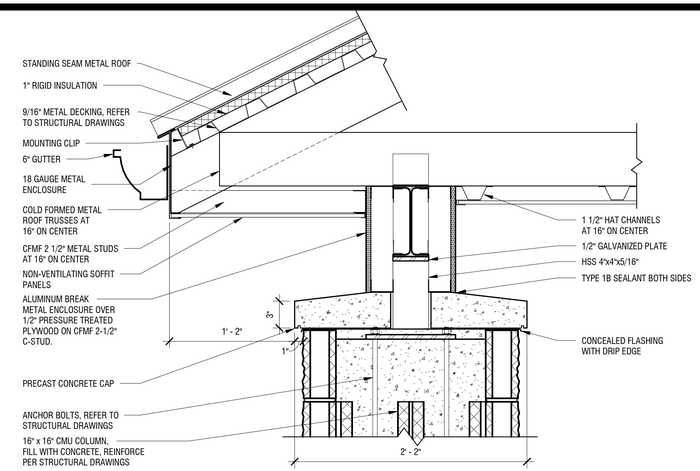

4 / A-501 SOFFIT DETAIL AT CANOPY
SCALE: 1 1/2" = 1'-0"

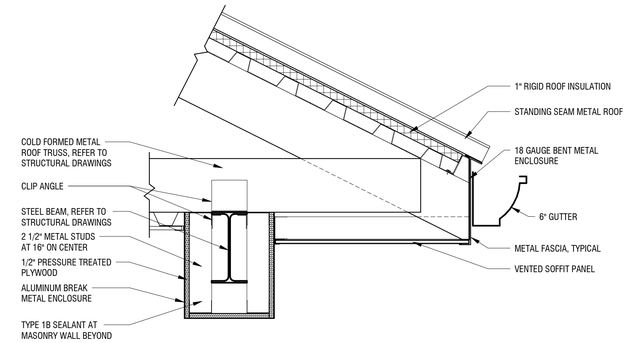

3 / A-501 SOFFIT DETAIL
SCALE: 1 1/2" = 1'-0"

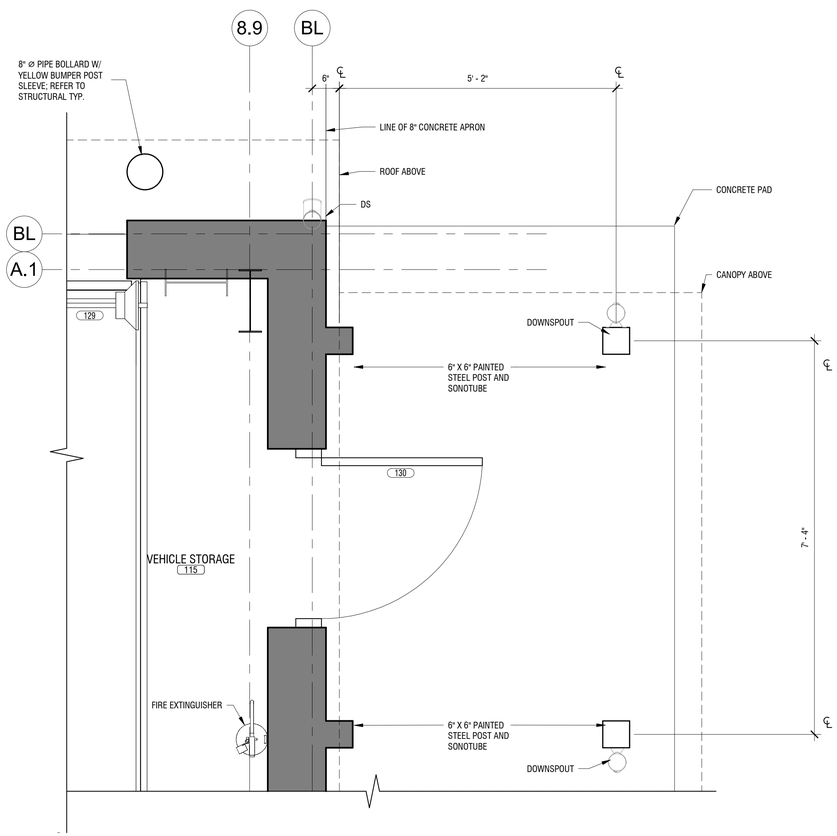

2 / A-501 TYPICAL CANOPY COLUMN LAYOUT
SCALE: 3/4" = 1'-0"

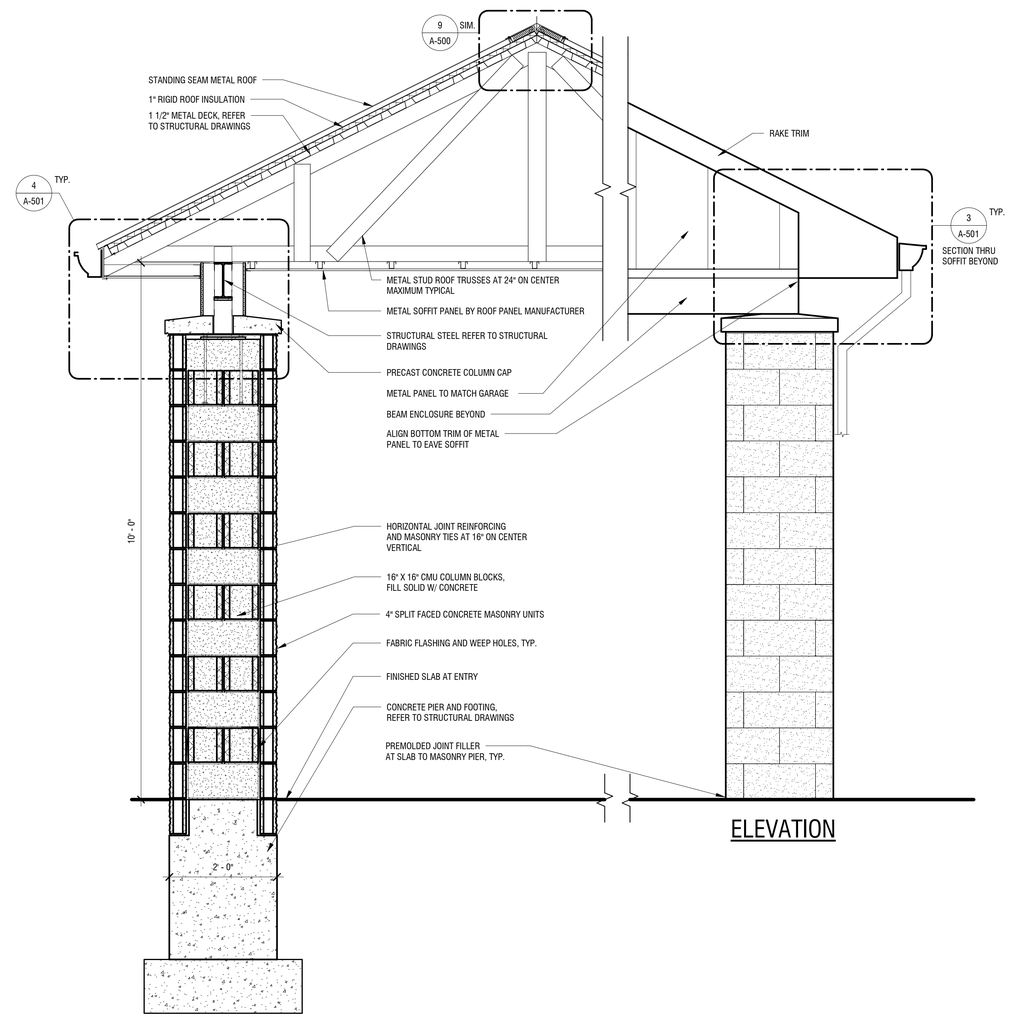

1 / A-501 WALL SECTION AT ENTRY CANOPY
SCALE: 3/4" = 1'-0"

NEW YORK STATE OF OPPORTUNITY. Office of General Services
DESIGN & CONSTRUCTION

CONSULTANT:
LaBella Powered by partnership.

WARNING:
THE ALTERATION OF THIS MATERIAL IN ANY WAY, UNLESS DONE UNDER THE DIRECTION OF A COMPARABLE PROFESSIONAL, I.E. ARCHITECT FOR AN ARCHITECT, ENGINEER FOR AN ENGINEER OR LANDSCAPE ARCHITECT FOR A LANDSCAPE ARCHITECT, IS A VIOLATION OF THE NEW YORK STATE EDUCATION LAW AND/OR REGULATIONS AND IS A CLASS 'A' MISDEMEANOR.

REGISTERED ARCHITECT DAVID L. WELLS 037599 STATE OF NEW YORK
03/20/2020

CONTRACT: CONSTRUCTION

TITLE: PROVIDE SUB-HEADQUARTERS BUILDING

LOCATION: DOT REGION 8, DUTCHESS COUNTY
205 LIME KILN RD.
EAST FISHKILL, NEW YORK

CLIENT: NEW YORK STATE DEPARTMENT OF TRANSPORTATION

MARK	DATE	DESCRIPTION
	10/17/2019	BID DOCUMENTS

PROJECT NUMBER:	45552-C
DESIGNED BY:	DMD
DRAWN BY:	DMD
FIELD CHECK:	
APPROVED:	

SHEET TITLE: CANOPY DETAILS

DRAWING NUMBER: A-501

2/28/2020 2:20:24 PM
C:\Users\Shackett\Documents\Revit Local Files\2018 DOT Sub Headquarter Bldg_shackett.rvt
36x24 PLOT SHEET

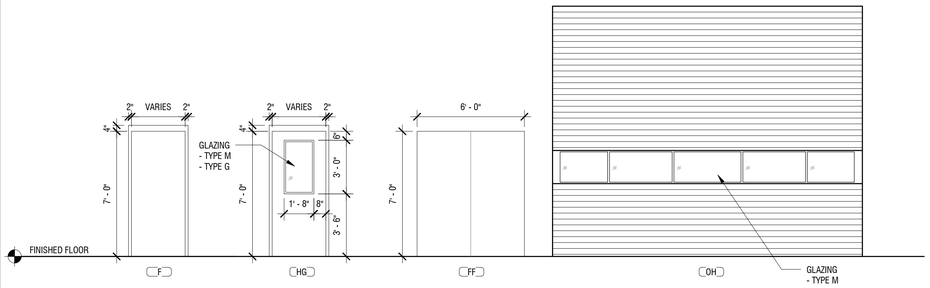

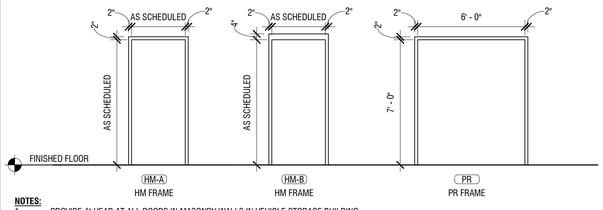

NOTES:
1. PROVIDE 4" HEAD AT ALL DOORS IN MASONRY WALLS IN VEHICLE STORAGE BUILDING.
2. FINISHED DOOR OPENINGS SHALL BE NOMINAL 4" FROM FINISHED CORNER OF ROOM EXCEPT WHERE DIMENSIONED OTHERWISE. REFER TO DETAILS ON A001

13 / A-600 DOOR AND FRAME TYPES
SCALE: 1/4" = 1'-0"

NOTE:
- REFER TO A-104 FOR THE PUMP HOUSE DOOR DETAILS.

DOOR SCHEDULE

DOOR NUMBER	DOORS LOCATION NO.	DOORS LOCATION ROOM	TO/FROM	DOORS LOCATION NO.	DOORS LOCATION ROOM	DOOR SIZE WIDTH	DOOR SIZE HEIGHT	THICKNESS	TYPE	MATERIAL	FINISH	GLAZING	FRAME TYPE	FRAME MATERIAL	FRAME FINISH	FRAME HEAD	FRAME JAMB	THRESHOLD	HARDWARE	RATING	COMMENTS	NO.
101	-	EXTERIOR	TO	101	VESTIBULE	3'-0"	7' - 0"	1 3/4"	HG	STL	PF	M	HM-B	STL	EAL-3	5/A600	4/A600	7/A600	1	-	INSUL. DOOR W/ WEATHER STRIPPING	101
102	101	VESTIBULE	TO	104	CORRIDOR	3'-0"	7' - 0"	1 3/4"	HG	STL	PF	M	HM-A	STL	EAL-3	6B/A600	6A/A600	-	10	-		102
103	103	HMS-1 OFFICE	FROM	104	CORRIDOR	3'-0"	7' - 0"	1 3/4"	HG	STL	PF	M	HM-A	STL	EAL-3	6B/A600	6A/A600	-	2	-	-	103
104	102	HMS-2 OFFICE	FROM	104	CORRIDOR	3'-0"	7' - 0"	1 3/4"	HG	STL	PF	M	HM-A	STL	EAL-3	6B/A600	6A/A600	-	2	-	-	104
105	105	W. LOCKER	FROM	104	CORRIDOR	3'-0"	7' - 0"	1 3/4"	F	STL	PF	-	HM-B	STL	EAL-3	9/A600	8/A600	-	4	-	-	105
106	106	LUNCH ROOM	FROM	104	CORRIDOR	3'-0"	7' - 0"	1 3/4"	HG	STL	PF	M	HM-A	STL	EAL-3	6B/A600	6A/A600	-	8	-	-	106
107	106	LUNCH ROOM	FROM	104	CORRIDOR	3'-0"	7' - 0"	1 3/4"	HG	STL	PF	M	HM-A	STL	EAL-3	6B/A600	6A/A600	-	7	-	-	107
108	104	CORRIDOR	TO	108	ELECTRIC	3'-0"	7' - 0"	1 3/4"	F	STL	PF	-	HM-B	STL	EAL-3	9/A600	8/A600	-	5	45 MIN	-	108
109	104	CORRIDOR	TO	109	JANITOR	3'-0"	7' - 0"	1 3/4"	F	STL	PF	-	HM-B	STL	EAL-3	9/A600	8/A600	-	3	-	-	109
110	107	M. LOCKER	FROM	104	CORRIDOR	3'-0"	7' - 0"	1 3/4"	F	STL	PF	-	HM-B	STL	EAL-3	9/A600	8/A600	-	4	-	-	110
111	104	CORRIDOR	TO	112	DATA	3'-0"	7' - 0"	1 3/4"	F	STL	PF	-	HM-B	STL	EAL-3	9/A600	8/A600	-	3	-	-	111
112	116	VEHICLE STORAGE	FROM	104	CORRIDOR	3'-0"	7' - 0"	1 3/4"	HG	STL	PF	-	HM-B	STL	EAL-3	9/A600	8/A600	-	6	-	-	112
113	115	VEHICLE STORAGE	FROM	104	CORRIDOR	3'-0"	7' - 0"	1 3/4"	HG	STL	PF	-	HM-B	STL	EAL-3	9/A600	8/A600	-	4	-	-	113
114	111	MECHANICAL	FROM	104	CORRIDOR	3'-0"	7' - 0"	1 3/4"	F	STL	PF	-	HM-B	STL	EAL-3	9/A600	8/A600	-	3	-	-	114
115	111	MECHANICAL	FROM	114	VEHICLE STORAGE	(2) 3' - 0"	7' - 0"	1 3/4"	F	STL	PF	-	HM-B	STL	EAL-3	9/A600	8/A600	-	9	-	-	115
116	110	TOOL	FROM	114	VEHICLE STORAGE	(2) 3' - 0"	7' - 0"	1 3/4"	F	STL	PF	-	HM-B	STL	EAL-3	9/A600	8/A600	-	9	-	-	116
117	-	EXTERIOR	TO	116	VEHICLE STORAGE	17'-4"	14' - 0"	1 5/8"	OH	STL	-	-	-	STL	-	3/A600	2/A600	1/A600	11	-	INSUL. OVERHEAD DOOR	117
118	-	EXTERIOR	TO	116	VEHICLE STORAGE	17'-4"	14' - 0"	1 5/8"	OH	STL	-	-	-	STL	-	3/A600	2/A600	1/A600	11	-	INSUL. OVERHEAD DOOR	118
119	-	EXTERIOR	TO	116	VEHICLE STORAGE	17'-4"	14' - 0"	1 5/8"	OH	STL	-	-	-	STL	-	3/A600	2/A600	1/A600	11	-	INSUL. OVERHEAD DOOR	119
120	-	EXTERIOR	TO	116	VEHICLE STORAGE	3'-0"	7' - 0"	1 3/4"	HG	STL	PF	M	HM-A	STL	EAL-3	11/A600	10/A600	7/A600	1	-	INSUL. DOOR W/ WEATHER STRIPPING	120
121	-	EXTERIOR	TO	113	WASH	3'-0"	7' - 0"	1 3/4"	HG	STL	PF	M	HM-A	STL	EAL-3	11/A600	10/A600	7/A600	1	-	INSUL. DOOR W/ WEATHER STRIPPING	121
122	-	EXTERIOR	TO	113	WASH	17'-4"	14' - 0"	1 5/8"	OH	STL	-	-	-	STL	-	3/A600	2/A600	1/A600	11	-	INSUL. OVERHEAD DOOR	122
123	-	EXTERIOR	TO	116	VEHICLE STORAGE	17'-4"	14' - 0"	1 5/8"	OH	STL	-	-	-	STL	-	3/A600	2/A600	1/A600	11	-	INSUL. OVERHEAD DOOR	123
124	-	EXTERIOR	TO	116	VEHICLE STORAGE	17'-4"	14' - 0"	1 5/8"	OH	STL	-	-	-	STL	-	3/A600	2/A600	1/A600	11	-	INSUL. OVERHEAD DOOR	124
125	-	EXTERIOR	TO	114	VEHICLE STORAGE	17'-4"	14' - 0"	1 5/8"	OH	STL	-	-	-	STL	-	3/A600	2/A600	1/A600	11	-	INSUL. OVERHEAD DOOR	125
126	-	EXTERIOR	TO	114	VEHICLE STORAGE	17'-4"	14' - 0"	1 5/8"	OH	STL	-	-	-	STL	-	3/A600	2/A600	1/A600	11	-	INSUL. OVERHEAD DOOR	126
127	-	EXTERIOR	TO	115	VEHICLE STORAGE	17'-4"	14' - 0"	1 5/8"	OH	STL	-	-	-	STL	-	3/A600	2/A600	1/A600	11	-	INSUL. OVERHEAD DOOR	127
128	-	EXTERIOR	TO	115	VEHICLE STORAGE	17'-4"	14' - 0"	1 5/8"	OH	STL	-	-	-	STL	-	3/A600	2/A600	1/A600	11	-	INSUL. OVERHEAD DOOR	128
129	-	EXTERIOR	TO	115	VEHICLE STORAGE	17'-4"	14' - 0"	1 5/8"	OH	STL	-	-	-	STL	-	3/A600	2/A600	1/A600	11	-	INSUL. OVERHEAD DOOR	129
130	-	EXTERIOR	TO	115	VEHICLE STORAGE	3'-0"	7' - 0"	1 3/4"	HG	STL	PF	M	HM-A	STL	EAL-3	11/A600	10/A600	7/A600	1	-	INSUL. DOOR W/ WEATHER STRIPPING	130
131	-	EXTERIOR	TO	115	VEHICLE STORAGE	3'-0"	7' - 0"	1 3/4"	HG	STL	PF	M	HM-A	STL	EAL-3	11/A600	10/A600	7/A600	1	-	INSUL. DOOR W/ WEATHER STRIPPING	131
132	-	EXTERIOR	TO	115	VEHICLE STORAGE	17'-4"	14' - 0"	1 5/8"	OH	STL	-	-	-	STL	-	3/A600	2/A600	1/A600	11	-	INSUL. OVERHEAD DOOR	132
133	-	EXTERIOR	TO	115	VEHICLE STORAGE	17'-4"	14' - 0"	1 5/8"	OH	STL	-	-	-	STL	-	3/A600	2/A600	1/A600	11	-	INSUL. OVERHEAD DOOR	133
134	-	EXTERIOR	TO	115	VEHICLE STORAGE	17'-4"	14' - 0"	1 5/8"	OH	STL	-	-	-	STL	-	3/A600	2/A600	1/A600	11	-	INSUL. OVERHEAD DOOR	134
135	-	EXTERIOR	TO	117	PUMP HOUSE	6'-0"	7' - 0"	1 3/4"	FF	STL	PF	-	PR	STL	EAL-3	13-A-104	9/A-104	14/A-104	12	-	REFER TO A-104 FOR ADDITIONAL PUMP HOUSE DETAILS AND REFERENCES	135

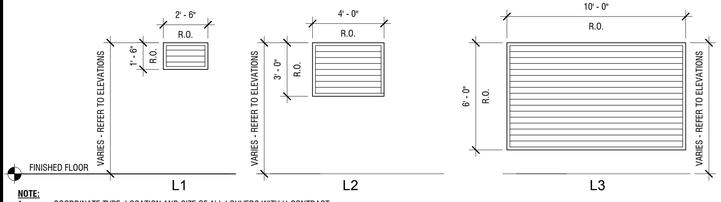

NOTE:
1. COORDINATE TYPE, LOCATION AND SIZE OF ALL LOUVERS WITH H-CONTRACT

12 / A-600 LOUVER TYPES
SCALE: 1/4" = 1'-0"

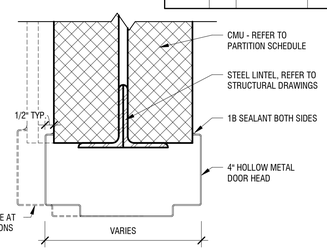

9 / A-600 DOOR HEAD DETAIL
SCALE: 3" = 1'-0"

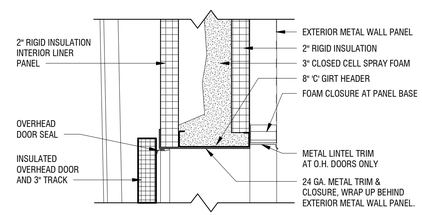

3 / A-600 OH DOOR HEAD
NOT TO SCALE

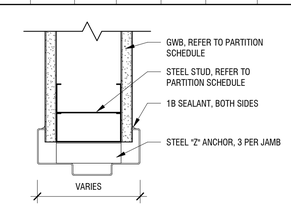

6A / A-600 JAMB DETAIL
SCALE: 3" = 1'-0"

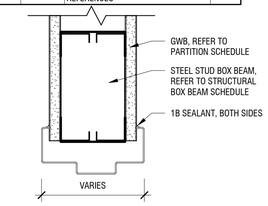

6B / A-600 HEAD DETAIL
SCALE: 3" = 1'-0"

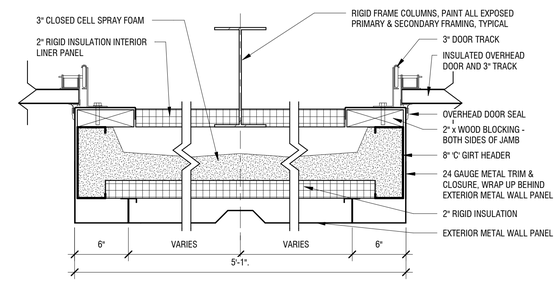

2 / A-600 OH DOOR JAMB DETAIL
NOT TO SCALE

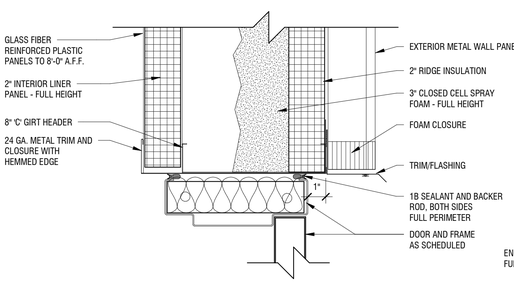

11 / A-600 METAL PANEL DOOR HEAD
SCALE: 3" = 1'-0"

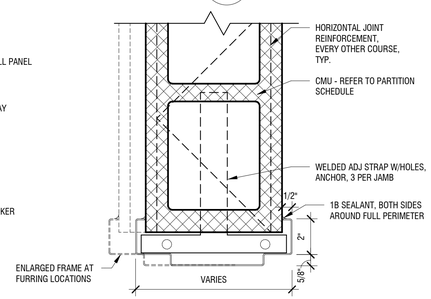

8 / A-600 DOOR JAMB DETAIL
SCALE: 3" = 1'-0"

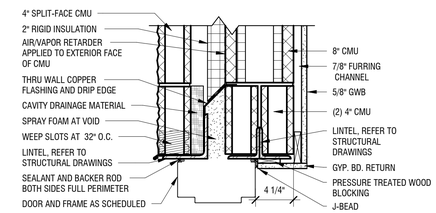

5 / A-600 EXTERIOR DOOR HEAD DETAIL
SCALE: 1 1/2" = 1'-0"

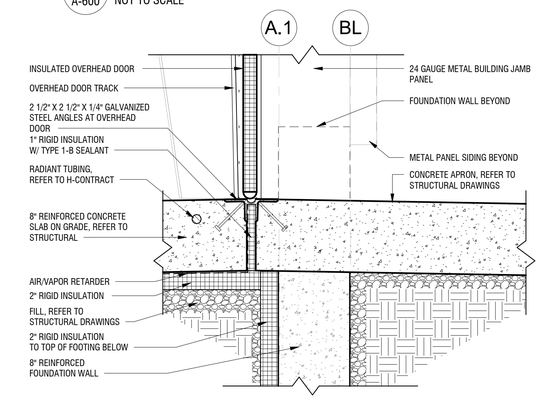

1 / A-600 BASE DETAIL AT OVERHEAD DOOR
SCALE: 1 1/2" = 1'-0"

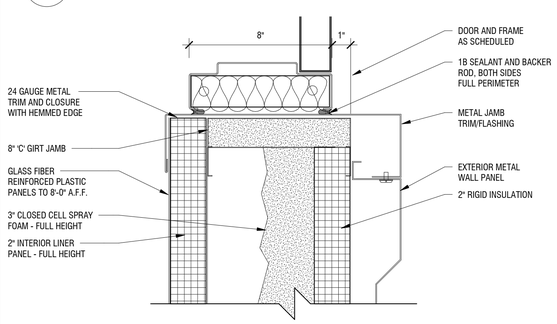

10 / A-600 METAL PANEL DOOR JAMB
SCALE: 3" = 1'-0"

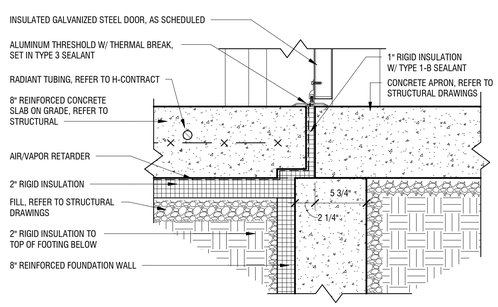

7 / A-600 DOOR THRESHOLD
SCALE: 1 1/2" = 1'-0"

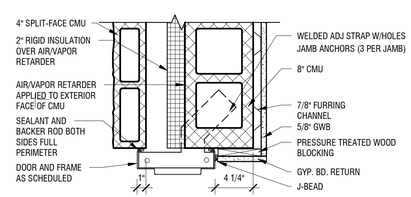

4 / A-600 EXTERIOR DOOR JAMB DETAIL
SCALE: 1 1/2" = 1'-0"

NEW YORK STATE OF OPPORTUNITY. Office of General Services

DESIGN & CONSTRUCTION

CONSULTANT:

LaBella Powered by partnership.

WARNING:
THE ALTERATION OF THIS MATERIAL IN ANY WAY, UNLESS DONE UNDER THE DIRECTION OF A COMPARABLE PROFESSIONAL, I.E. ARCHITECT FOR AN ARCHITECT, ENGINEER FOR AN ENGINEER OR LANDSCAPE ARCHITECT FOR A LANDSCAPE ARCHITECT, IS A VIOLATION OF THE NEW YORK STATE EDUCATION LAW AND/OR REGULATIONS AND IS A CLASS 'A' MISDEMEANOR.

REGISTERED ARCHITECT DAVID L. WELLS 037599 STATE OF NEW YORK
03/20/2020

CONTRACT:
CONSTRUCTION

TITLE:
PROVIDE SUB-HEADQUARTERS BUILDING

LOCATION:
DOT REGION 8, DUTCHESS COUNTY
205 LIME KILN RD.
EAST FISHKILL, NEW YORK

CLIENT:
NEW YORK STATE DEPARTMENT OF TRANSPORTATION

MARK	DATE	DESCRIPTION
	10/17/2019	BID DOCUMENTS

PROJECT NUMBER:	45552-C
DESIGNED BY:	DMD
DRAWN BY:	DMD
FIELD CHECK:	
APPROVED:	

SHEET TITLE:
DOOR SCHEDULES AND DETAILS

DRAWING NUMBER:
A-600

2/28/2020 2:20:27 PM
C:\Users\SHackett\Documents\Revit Local Files\2018 DOT Sub Headquarter Bldg_shackett.rvt
36x24 PLOT SHEET

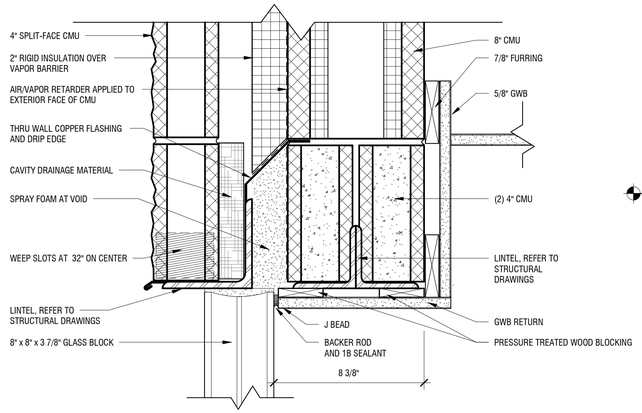

10 A-601 WINDOW HEAD AT GLASS BLOCK
SCALE: 3" = 1'-0"

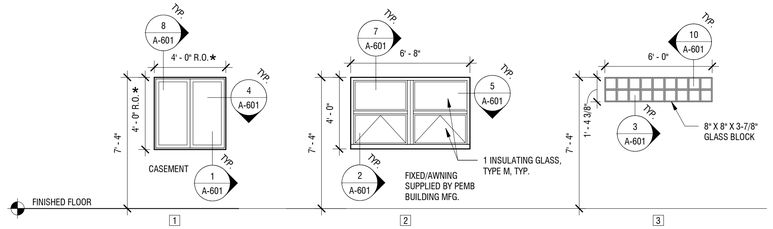

9 A-601 WINDOW TYPES
SCALE: 1/4" = 1'-0"

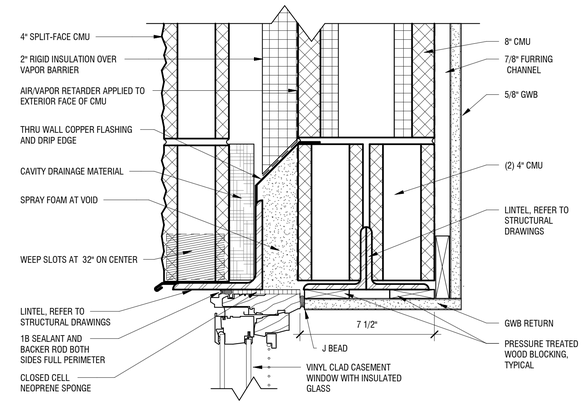

8 A-601 WINDOW HEAD AT OFFICE
SCALE: 3" = 1'-0"

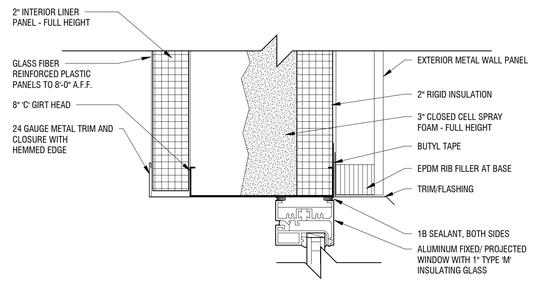

7 A-601 WINDOW/LOUVER HEAD DETAIL AT METAL BUILDING
SCALE: 3" = 1'-0"

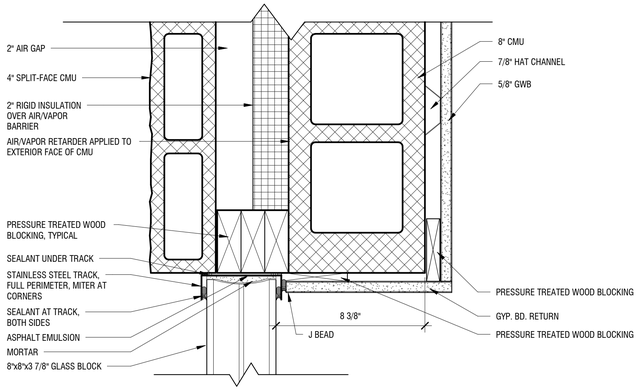

6 A-601 WINDOW JAMB AT GLASS BLOCK
SCALE: 3" = 1'-0"

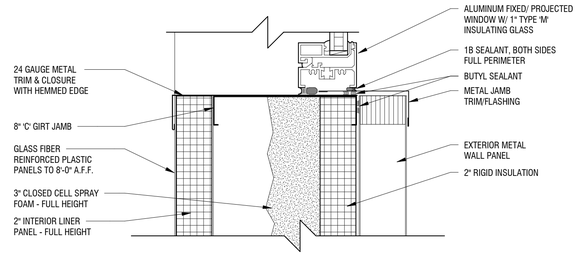

5 A-601 WINDOW/LOUVER JAMB DETAIL AT METAL BUILDING
SCALE: 3" = 1'-0"

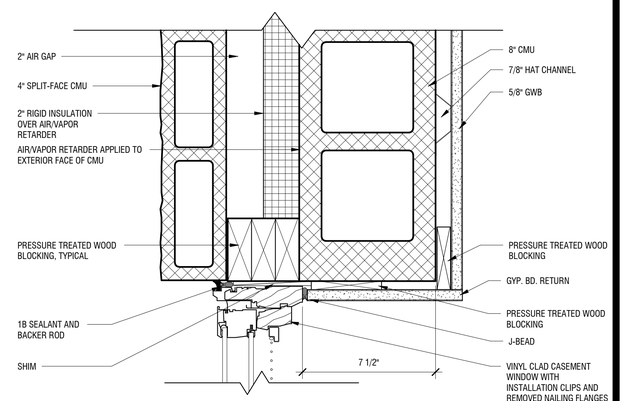

4 A-601 WINDOW JAMB AT OFFICE
SCALE: 3" = 1'-0"

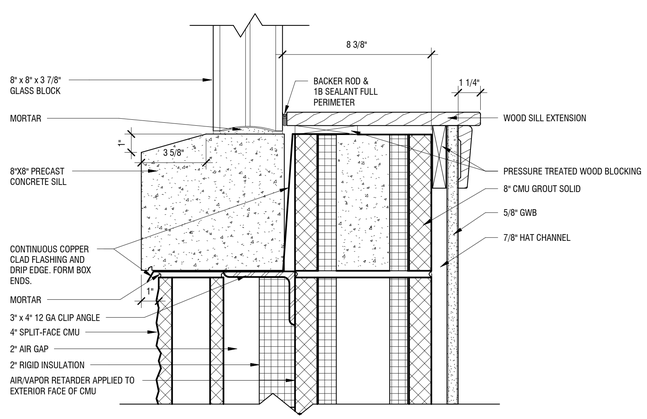

3 A-601 WINDOW SILL AT GLASS BLOCK
SCALE: 3" = 1'-0"

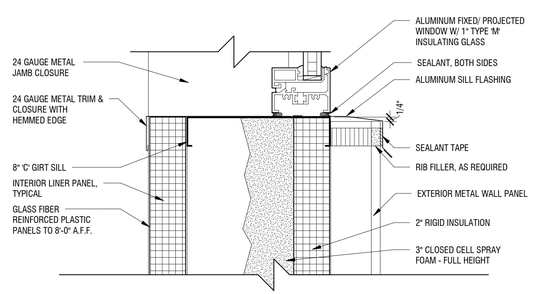

2 A-601 WINDOW/LOUVER SILL DETAIL AT METAL BUILDING
SCALE: 3" = 1'-0"

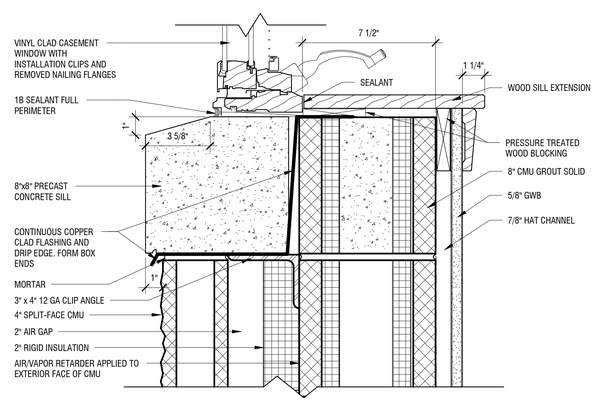

1 A-601 WINDOW SILL AT OFFICE
SCALE: 3" = 1'-0"

NEW YORK STATE OF OPPORTUNITY. Office of General Services
DESIGN & CONSTRUCTION

CONSULTANT:
LaBella Powered by partnership.

WARNING:
THE ALTERATION OF THIS MATERIAL IN ANY WAY, UNLESS DONE UNDER THE DIRECTION OF A COMPARABLE PROFESSIONAL, I.E. ARCHITECT FOR AN ARCHITECT, ENGINEER FOR AN ENGINEER OR LANDSCAPE ARCHITECT FOR A LANDSCAPE ARCHITECT, IS A VIOLATION OF THE NEW YORK STATE EDUCATION LAW AND/OR REGULATIONS AND IS A CLASS 'A' MISDEMEANOR.

REGISTERED ARCHITECT DAVID L. WELLS 037599 STATE OF NEW YORK
03/20/2020

CONTRACT:
CONSTRUCTION

TITLE:
PROVIDE SUB-HEADQUARTERS BUILDING

LOCATION:
DOT REGION 8, DUTCHESS COUNTY
205 LIME KILN RD.
EAST FISHKILL, NEW YORK

CLIENT:
NEW YORK STATE DEPARTMENT OF TRANSPORTATION

MARK	DATE	DESCRIPTION
	10/17/2019	BID DOCUMENTS

PROJECT NUMBER:	45552-C
DESIGNED BY:	DMD
DRAWN BY:	DMD
FIELD CHECK:	
APPROVED:	

SHEET TITLE:
WINDOW DETAILS

DRAWING NUMBER:
A-601

2/28/2020 2:20:30 PM
C:\Users\SHackett\Documents\Revit Local Files\2018 DOT Sub Headquarter Bldg_shackett.rvt
36x24 PLOT SHEET

HVAC ABBREVIATIONS:

ACCU	AIR-COOLED CONDENSING UNIT
AHU	AIR HANDLING UNIT
AFF	ABOVE FINISHED FLOOR
BTU	BRITISH THERMAL UNITS
C	COMMON
CC	COOLING COIL
CFM	CUBIC FEET PER MINUTE
CUH	CABINET UNIT HEATER
D	DRAIN
DEG	DEGREE
DIA	DIAMETER (ALSO Ø)
DN	DOWN
DX	DIRECT EXPANSION
EA	EXHAUST AIR
EAT	ENTERING AIR TEMPERATURE
EF	EXHAUST FAN
EFF	EFFICIENCY
ESP	EXTERNAL STATIC PRESSURE
EWT	ENTERING WATER TEMPERATURE
FLR	FLOOR
FPM	FEET PER MINUTE
FT	FEET
GPM	GALLONS PER MINUTE
HC	HEATING COIL
HP	HORSEPOWER
IN	INCHES
LAT	LEAVING AIR TEMPERATURE
LWT	LEAVING WATER TEMPERATURE
M	MOTORIZED DAMPER / VALVE
MC	HVAC CONTRACTOR
MAX	MAXIMUM
MBH	1000 BTU/HR
MIN	MINIMUM
NIC	NOT IN CONTRACT
NTS	NOT TO SCALE
OA	OUTSIDE AIR
Ø	PHASE
RA	RETURN AIR
RF	RETURN FAN
RPM	REVOLUTIONS PER MINUTE
SA	SUPPLY AIR
SF	SUPPLY FAN
SMACNA	SHEET METAL & AIR CONDITIONING CONTRACTORS NATIONAL ASSOCIATION
SQ. FT	SQUARE FEET
TYP	TYPICAL
T	THERMOSTAT/TEMPERATURE SENSOR
UH	UNIT HEATER
V	VOLTS
VD	VOLUME DAMPER
W	WIDTH
WC	WATER COLUMN

DUCTWORK SYMBOLS:

SINGLE LINE	DOUBLE LINE	DESCRIPTION
		DUCT
		SUPPLY DUCT DN AIR AT YOU
		SUPPLY DUCT UP AIR AWAY FROM YOU
		RETURN/EXHAUST DUCT DN AIR AT YOU
		RETURN/EXHAUST DUCT UP AIR AWAY FROM YOU
		TRANSITION
		FLARED TAKEOFF (RECTANGULAR DUCT)
		CAPPED DUCT
		RECTANGULAR MITERED ELBOW WITH TURNING VANES
R, D	R	90° OR 45° LONG RADIUS ELBOW R = 1½ DUCT DIA. OR WIDTH (ROUND OR RECTANGULAR DUCT)
M	M	MOTORIZED DAMPER OBD AS INDICATED ON PLANS & SPECIFICATIONS
BDD	BDD	BACKDRAFT DAMPER
FD	FD	FIRE DAMPER
VD	VD	VOLUME DAMPER (PARALLEL, SINGLE, OR OPPOSED BLADE)
		FLEXIBLE DUCT
18x8	18x8	WIDTH x DEPTH (FREE AREA)
	10"Ø	ROUND DUCT INSIDE DIAMETER
		SUPPLY AIR DUCT
		RETURN/EXHAUST AIR DUCT

PIPING SYMBOLS:

D	DRAIN
HWR	HOT WATER RETURN
HWS	HOT WATER SUPPLY
RL	REFRIGERANT LIQUID
RS	REFRIGERANT SUCTION
	PIPE ELBOW UP/TOP CONNECTION
	PIPE ELBOW DOWN
	UNION
M	TWO-WAY CONTROL VALVE, MOTORIZED
	PRESSURE & TEMPERATURE (P&T) TEST PLUG
	BALANCING VALVE (FLOW METERING DEVICE)
	STRAINER
	STRAINER WITH BLOWDOWN
	MANUAL AIR VENT
	METAL FLEXIBLE VIBRATION ELIMINATORS
	THERMOMETER
	PRESSURE GAUGE
	BALL VALVE
	CHECK VALVE (ARROW INDICATES DIRECTION OF FLOW)
	PUMP

AIR OUTLET & INLET SYMBOLS:

	SUPPLY REGISTER, GRILL OR DIFFUSER (ROUND NECK)
	RETURN OR EXHAUST REGISTER OR DIFFUSER (ROUND NECK)
8Ø	ROUND DUCT SIZE
12x8	RECTANGULAR DUCT SIZE. FIRST NUMBER INDICATES SIZE FOR SIDE SHOWN
	DIRECTION OF AIR FLOW
S-X X CFM	DIFFUSER TYPE, CFM

CONTROL SYMBOLS:

T	WALL MOUNTED TEMPERATURE SENSOR
CO	WALL MOUNTED CARBON MONOXIDE SENSOR
NO_2	WALL MOUNTED NITROGEN DIOXIDE SENSOR
T	TEMPERATURE SENSOR
S	DUCT SMOKE DETECTOR

DUCTWORK

1. ALL BRANCH TAKEOFFS FROM MAIN SUPPLY DUCT SHALL BE VIA A 45° SHOE OR BELL MOUTH TYPE FITTING WITH VOLUME DAMPER.
2. ALL SUPPLY DUCTWORK SHALL BE INSTALLED IN ACCORDANCE WITH THE CURRENT VERSION OF THE NEW YORK STATE MECHANICAL CODE AND THE NEW YORK STATE ENERGY CONSERVATION CODE, AND THE MOST CURRENT VERSION OF SMACNA "HVAC DUCT CONSTRUCTION STANDARDS, METAL AND FLEXIBLE".
   2.A. ALL SUPPLY DUCTWORK SHALL BE CONSTRUCTED TO 2" W.G. POSITIVE PRESSURE CLASS, UNLESS OTHERWISE NOTED.
   2.B. ALL RETURN DUCTWORK SHALL BE CONSTRUCTED TO 2" W.G. NEGATIVE PRESSURE CLASS, UNLESS OTHERWISE NOTED.
3. ALL FLEXIBLE DUCTWORK SHALL NOT EXCEED 3 FEET AND SHALL BE PULLED TIGHT TO ELIMINATE SAGGING.
4. ALL DUCT SIZES SHOWN ARE NET INSIDE DIMENSIONS, UNLESS OTHERWISE NOTED.
5. ALL DUCTWORK SHALL BE SEALED TO SEAL CLASS A.
6. PROVIDE ALL RADIUS DUCT ELBOWS WITH CENTERLINE RADIUS EQUAL TO 1-1/2 TIMES THE RADIUS DEPTH. PROVIDE ALL SQUARE DUCT ELBOWS WITH TURNING VANES. (VOLUME DAMPERS REQUIRED AT ALL BRANCH CONNECTIONS.)
7. ALL DUCTWORK TO BE RIGID SHEET METAL CONSTRUCTED FROM GALVANIZED SHEET STEEL IN ACCORDANCE WITH SMACNA LOW VELOCITY DUCT CONSTRUCTION STANDARDS.
8. PROVIDE ALL REQUIRED DAMPERS, TRANSITIONS, CONNECTIONS TO AIR TERMINALS, AND OTHER ACCESSORIES NECESSARY FOR A COMPLETE OPERATING SYSTEM. NO VARIATION OF DUCT CONFIGURATION OR SIZES WILL BE PERMITTED EXCEPT BY PERMISSION FROM THE DIRECTORS REPRESENTATIVE.
9. PROVIDE HOT-DIPPED GALVANIZED STEEL, FASTENERS, ANCHORS. RODS, STRAPS, TRIM, AND ANGLES FOR SUPPORT OF DUCTWORK.
10. DUCTWORK ABOVE CEILINGS MUST BE RUN BETWEEN STRUCTURE. MINIMIZE ELEVATION CHANGES WHERE POSSIBLE.
11. ALL BRANCH RUNOUTS FROM ROUND DUCT MAINS SHALL HAVE CONICAL TAKE-OFFS.
12. ALL SUPPLY AIR ROUND DUCT FITTINGS SHALL BE LONG RADIUS ELBOWS, Y-TEES, OR THEY SHALL BE MITERED WITH TURNING VANES.
13. ALL BRANCH DUCTWORK TO BE THE SAME SIZE AS THE DIFFUSER BEING SERVED.
14. LOCATE ALL DUCTWORK AS HIGH AS POSSIBLE.

TESTING AND BALANCING

1. RETAIN THE SERVICES OF AN INDEPENDENT CERTIFIED BALANCING CONTRACTOR, WHO SHALL BALANCE SYSTEMS IN ACCORDANCE WITH NEBB AND SMACNA WRITTEN PRACTICES AND PROVIDE A REPORT TO THE DIRECTORS REPRESENTATIVE, AND COMMISSIONING AGENT FOR REVIEW AND APPROVAL.
2. THE TESTS SHALL BE DONE IN THE PRESENCE OF OR WITH THE PRIOR KNOWLEDGE OF THE DIRECTOR'S REPRESENTATIVE.
3. OPERATIONAL DEFICIENCIES SHALL BE REPORTED TO THE DIRECTOR'S REPRESENTATIVE.
4. ALL DATA RECORDED SHALL BE ENTERED INTO THE BALANCING REPORT.
5. SUBMIT AN AS-BUILT PLAN ON WHICH ALL SUPPLY DIFFUSERS SHALL BE NUMBERED AND IDENTIFIED TO CORRESPOND WITH THE FINAL AIR BALANCE REPORTS. ALL DIFFUSERS SHALL BE GROUPED, AND WHENEVER POSSIBLE, ROOM NUMBERS SHALL BE USED.

HVAC GENERAL NOTES

1. SCOPE OF WORK SHALL INCLUDE ALL LABOR, MATERIALS, TOOLS, EQUIPMENT, TRANSPORTATION, HOISTING AND RIGGING, ETC. TO PERFORM THE WORK AS INDICATED ON THE DRAWINGS AND HEREIN SPECIFIED FOR A COMPLETE AND TOTAL INSTALLATION.
2. ALL WORK SHALL BE IN ACCORDANCE WITH NATIONAL, AND STATE CODES AND ORDINANCES.
3. PROVIDE ALL HANGERS AND SUPPORTS AS REQUIRED TO SUPPORT ALL DUCT AND EQUIPMENT.
4. UNCONDITIONALLY WARRANT ALL WORK TO BE FREE OF DEFECTS IN MATERIAL AND WORKMANSHIP FOR A PERIOD OF ONE (1) YEAR FROM THE DATE OF FINAL ACCEPTANCE BY DIRECTORS REPRESENTATIVE AND WILL REPAIR OR REPLACE ANY DEFECTIVE WORK PROMPTLY AND WITHOUT CHARGE AND RESTORE ANY OTHER EXISTING WORK DAMAGED IN THE COURSE OF REPAIRING DEFECTIVE MATERIALS AND WORKMANSHIP.
5. PROVIDE START-UP AND ENSURE PROPER OPERATION OF ALL EQUIPMENT.
6. PROVIDE ALL CONTROLS AND CONTROL WIRING.
7. CONNECT WORK IN A NEAT AND WORKMANLIKE MANNER.
8. REFER TO ARCHITECTURAL DRAWINGS FOR CEILING HEIGHTS AND CONSTRUCTION. WHERE WORK BETWEEN THIS DRAWING AND ARCHITECTURAL PLANS ARE IN CONFLICT, ADVISE AND INFORM THE DIRECTOR'S REPRESENTATIVE PRIOR TO FABRICATION OF SHEET METAL.
9. THE SHEET METAL SHOP DRAWINGS SHALL INDICATE ALL HUNG CEILING STARTING POINTS. ELEVATIONS AND BREAK LINES.
10. PROVIDE FINAL "AS-BUILT" DRAWINGS TO DIRECTORS REPRESENTATIVE AS PART OF THIS PROJECT.
11. MANUFACTURER'S NAMES AND MODEL NUMBERS SHOWN ON THE DRAWINGS ARE FOR DESCRIPTIVE PURPOSES AND ARE INTENDED TO SHOW A LEVEL OF PERFORMANCE AS WELL AS QUALITY OF MATERIALS. SUBSTITUTIONS MAY BE SUBMITTED TO THE DIRECTORS REPRESENTATIVE FOR APPROVAL.
12. THE MECHANICAL CONTRACTOR SHALL PROCURE AND PAY FOR ALL PERMITS. FEES AND INSPECTIONS NECESSARY TO COMPLETE THE MECHANICAL WORK.
13. COORDINATE THE INSTALLATION OF POWERED EQUIPMENT AND TEMPERATURE CONTROL WORK WITH ELECTRICAL CONTRACTOR.
14. VOLUME DAMPERS ARE REQUIRED AT ALL BRANCH TAKE-OFFS AS SHOWN ON THE " TYPICAL BRANCH TAKE-OFF DETAIL". ADDITIONALLY, VOLUME DAMPERS ARE REQUIRED IN LOCATIONS SHOWN ON PLANS.
15. DIFFUSERS AND REGISTERS SHALL NOT EXCEED A VALUE OF 25 NOISE CRITERIA (NC), WITH SOUND PRESSURE LEVELS BASED ON A 10 FT x 8 FT ROOM ABSORPTION. STATIC PRESSURE SHALL NOT EXCEED 0.08 INCHES OF WATER. SIZES SHOWN ON REGISTER AND DIFFUSER SCHEDULE ARE NECK SIZES.
16. THE BUILDING HAS A SEISMIC DESIGN CATEGORY OF A, IS SITE CLASS B, AND HAS AN IMPORTANCE FACTOR OF 1.0. REFER TO DRAWING S-001 FOR SPECIFIC SEISMIC LOADS. PROVIDE SEISMIC BRACING / SUPPORTS AS REQUIRED BY ASCE 7 FOR ALL PIPING, DUCTWORK, AND EQUIPMENT.
17. FIELD COORDINATE ALL DUCT AND PIPE RUNS BEFORE FABRICATION AND INSTALLATION. NO EXTRAS SHALL BE PERMITTED FOR REROUTING, REFABRICATION, RESTOCKING OR REMOVAL OF INSTALLED WORK DUE TO COORDINATION WITH BUILDING STRUCTURE, WORK OF OTHER TRADES OR EXISTING BUILDING COMPONENTS. DRAWINGS ARE SCHEMATIC AND, DUCT AND PIPING RUNS DO NOT SHOW ALL NECESSARY CHANGES IN ELEVATION OR OFFSETS REQUIRED FOR A COMPLETE INSTALLATION. PROVIDE ALL DUCT AND PIPE OFFSETS AS REQUIRED FOR THE INSTALLATION OF THE DUCT AND PIPING SHOWN ON PLANS.

INSTRUMENT NOTES

1. INSTRUMENTS PROVIDED BY HVAC CONTRACTOR: LOW VOLTAGE (24V OR LESS) WIRING BY CONTROLS VENDOR, HIGH VOLTAGE (48V OR HIGHER) AND FIRE ALARM WIRING SHALL BE PERFORMED BY ELECTRICAL TRADE. VERIFY INSTRUMENT FUNCTIONS PRIOR TO TESTING, ADJUSTING AND BALANCING.
2. PROVIDE ALL CONTROL WIRING NECESSARY FOR THE COMPLETE AND PROPER OPERATING TEMPERATURE CONTROL SYSTEM.

IECC C103.2.2 (NYS 2016 SUPPLEMENT):
TO THE BEST OF MY KNOWLEDGE, BELIEF, AND PROFESSIONAL JUDGEMENT, THE PLANS AND SPECIFICATIONS ARE IN COMPLIANCE WITH THE 2015 IECC COMMERCIAL PROVISIONS (AS AMENDED BY THE NYS 2016 SUPPLEMENT).

APPLICABLE CODES:

- INTERNATIONAL BUILDING CODE 2015 AS REFERENCED IN THE 2017 UNIFORM CODE SUPPLEMENT
- INTERNATIONAL ENERGY CONSERVATION CODE 2015 IN CONJUNCTION WITH THE 2016 SUPPLEMENT TO THE NEW YORK STATE ENERGY CONSERVATION CODE
- INTERNATIONAL MECHANICAL CODE 2015 AS REFERENCED IN THE 2017 UNIFORM CODE SUPPLEMENT
- INTERNATIONAL FUEL GAS CODE 2015 AS REFERENCED IN THE 2017 UNIFORM CODE SUPPLEMENT

36x24 PLOT SHEET

NEW YORK STATE OF OPPORTUNITY. Office of General Services
DESIGN & CONSTRUCTION

CONSULTANT:

LaBella Powered by partnership.

MH PROFESSIONAL ENGINEERING, PLLC

WARNING:
THE ALTERATION OF THIS MATERIAL IN ANY WAY, UNLESS DONE UNDER THE DIRECTION OF A COMPARABLE PROFESSIONAL, I.E. ARCHITECT FOR AN ARCHITECT, ENGINEER FOR AN ENGINEER OR LANDSCAPE ARCHITECT FOR A LANDSCAPE ARCHITECT, IS A VIOLATION OF THE NEW YORK STATE EDUCATION LAW AND/OR REGULATIONS AND IS A CLASS 'A' MISDEMEANOR.

PROFESSIONAL ENGINEER MICHELLE M. HOUGHTALING 072116 STATE OF NEW YORK

CONTRACT: HVAC

TITLE: PROVIDE SUB-HEADQUARTERS BUILDING

LOCATION: DOT REGION 8, DUTCHESS COUNTY
205 LIME KILN RD.
EAST FISHKILL, NEW YORK 12533

CLIENT: NEW YORK STATE DEPARTMENT OF TRANSPORTATION

MARK	DATE	DESCRIPTION
	10/17/2019	BID DOCUMENTS

PROJECT NUMBER:	45552-H
DESIGNED BY:	RS
DRAWN BY:	JM
FIELD CHECK:	
APPROVED:	MH

SHEET TITLE: SYMBOLS, NOTES, & ABBREVIATIONS

DRAWING NUMBER: M-001

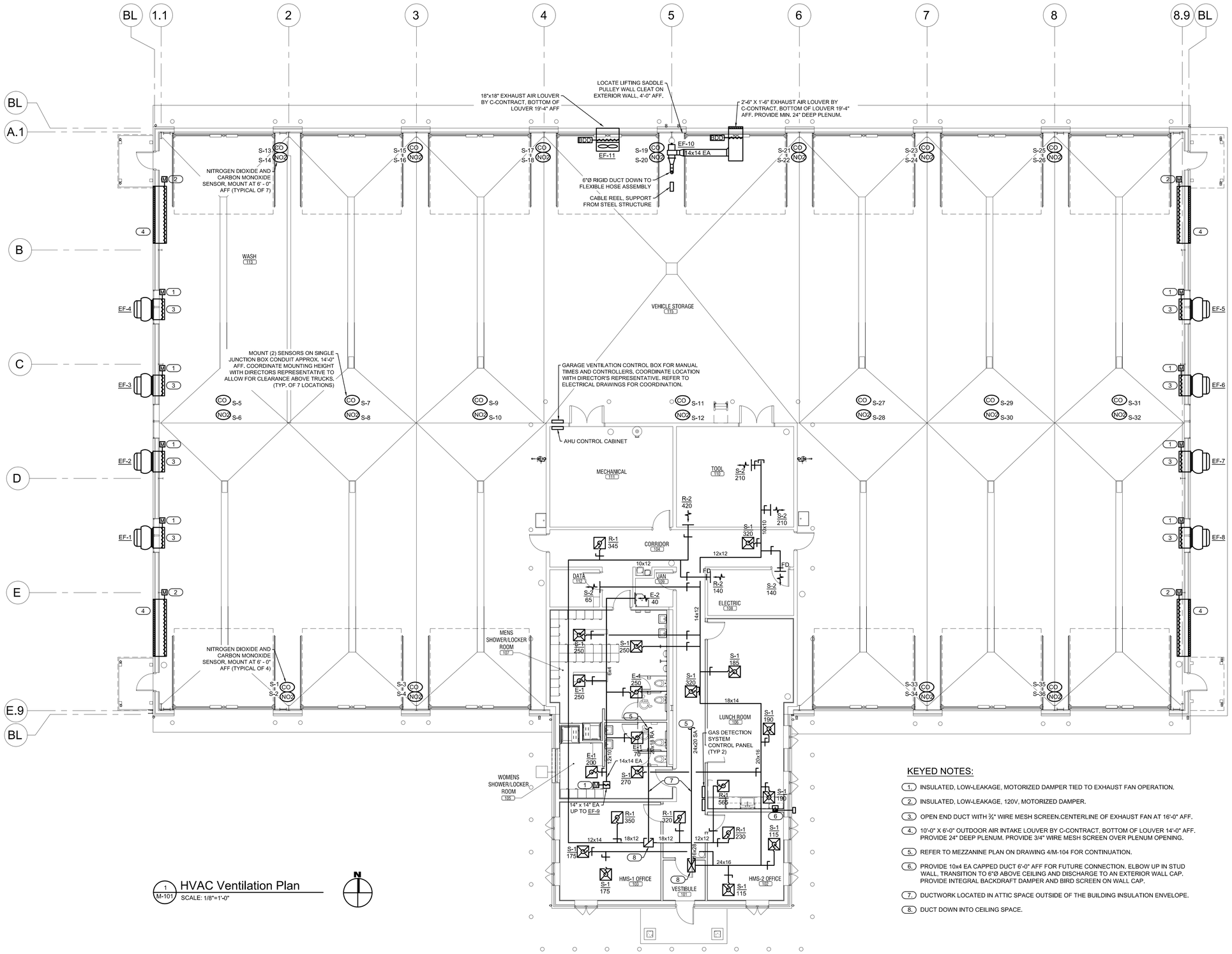

1 M-101 HVAC Ventilation Plan
SCALE: 1/8"=1'-0"

N

KEYED NOTES:

1. INSULATED, LOW-LEAKAGE, MOTORIZED DAMPER TIED TO EXHAUST FAN OPERATION.
2. INSULATED, LOW-LEAKAGE, 120V, MOTORIZED DAMPER.
3. OPEN END DUCT WITH ¾" WIRE MESH SCREEN.CENTERLINE OF EXHAUST FAN AT 16'-0" AFF.
4. 10'-0" X 6'-0" OUTDOOR AIR INTAKE LOUVER BY C-CONTRACT, BOTTOM OF LOUVER 14'-0" AFF. PROVIDE 24" DEEP PLENUM. PROVIDE 3/4" WIRE MESH SCREEN OVER PLENUM OPENING.
5. REFER TO MEZZANINE PLAN ON DRAWING 4/M-104 FOR CONTINUATION.
6. PROVIDE 10x4 EA CAPPED DUCT 6'-0" AFF FOR FUTURE CONNECTION. ELBOW UP IN STUD WALL, TRANSITION TO 6"Ø ABOVE CEILING AND DISCHARGE TO AN EXTERIOR WALL CAP. PROVIDE INTEGRAL BACKDRAFT DAMPER AND BIRD SCREEN ON WALL CAP.
7. DUCTWORK LOCATED IN ATTIC SPACE OUTSIDE OF THE BUILDING INSULATION ENVELOPE.
8. DUCT DOWN INTO CEILING SPACE.

36x24 PLOT SHEET

NEW YORK STATE OF OPPORTUNITY. Office of General Services

DESIGN & CONSTRUCTION

CONSULTANT:

LaBella Powered by partnership.

MH PROFESSIONAL ENGINEERING, PLLC

WARNING:
THE ALTERATION OF THIS MATERIAL IN ANY WAY, UNLESS DONE UNDER THE DIRECTION OF A COMPARABLE PROFESSIONAL, I.E. ARCHITECT FOR AN ARCHITECT, ENGINEER FOR AN ENGINEER OR LANDSCAPE ARCHITECT FOR A LANDSCAPE ARCHITECT, IS A VIOLATION OF THE NEW YORK STATE EDUCATION LAW AND/OR REGULATIONS AND IS A CLASS 'A' MISDEMEANOR.

PROFESSIONAL ENGINEER MICHELLE M. HOUGHTALING 072116 STATE OF NEW YORK

CONTRACT: HVAC

TITLE: PROVIDE SUB-HEADQUARTERS BUILDING

LOCATION: DOT REGION 8, DUTCHESS COUNTY
205 LIME KILN RD.
EAST FISHKILL, NEW YORK 12533

CLIENT: NEW YORK STATE DEPARTMENT OF TRANSPORTATION

MARK	DATE	DESCRIPTION
	10/17/2019	BID DOCUMENTS

PROJECT NUMBER:	45552-H
DESIGNED BY:	RS
DRAWN BY:	JM
FIELD CHECK:	
APPROVED:	MH

SHEET TITLE: VENTILATION PLAN

DRAWING NUMBER: M-101

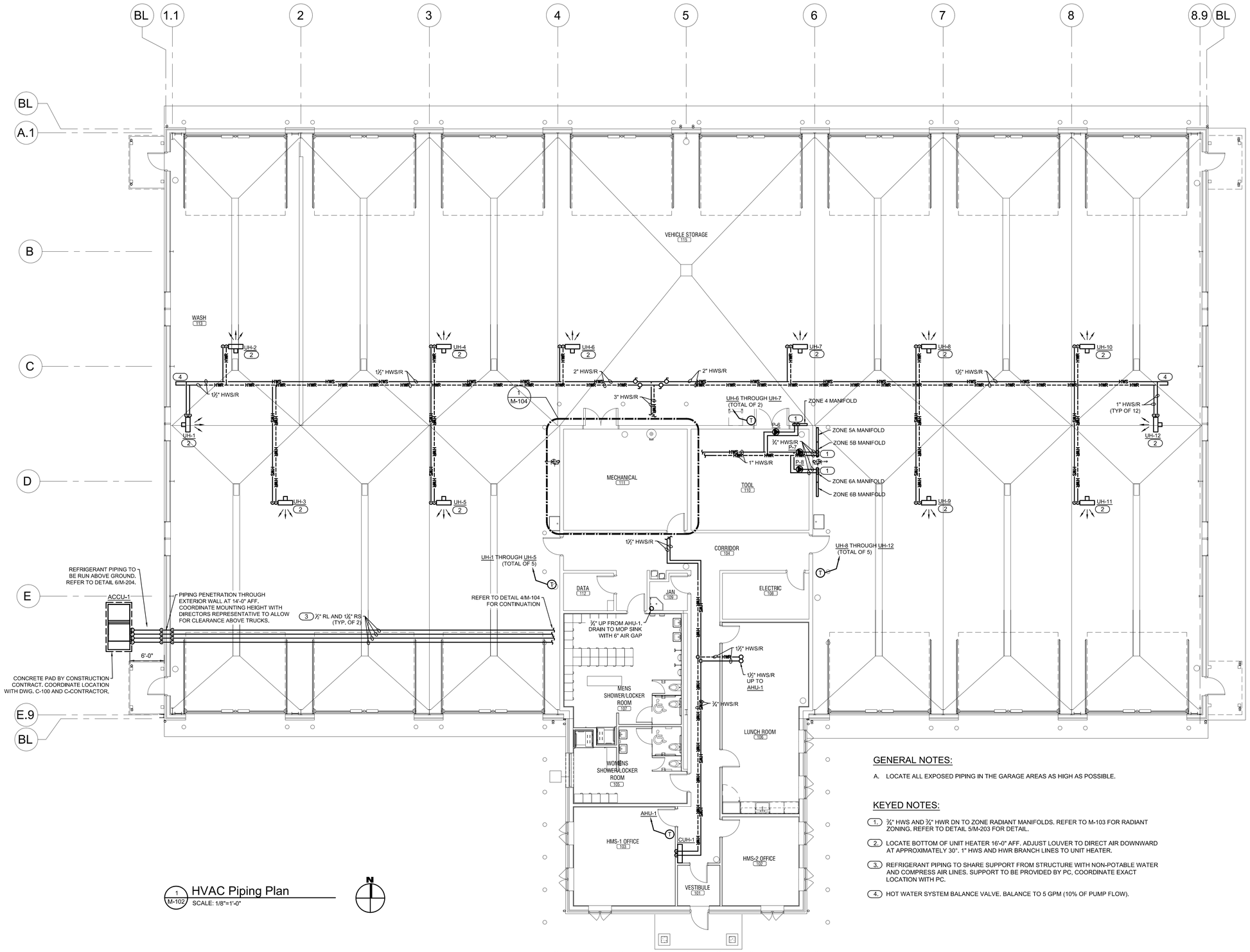

1 / M-102 HVAC Piping Plan

SCALE: 1/8"=1'-0"

GENERAL NOTES:

A. LOCATE ALL EXPOSED PIPING IN THE GARAGE AREAS AS HIGH AS POSSIBLE.

KEYED NOTES:

1. ¾" HWS AND ¾" HWR DN TO ZONE RADIANT MANIFOLDS. REFER TO M-103 FOR RADIANT ZONING. REFER TO DETAIL 5/M-203 FOR DETAIL.
2. LOCATE BOTTOM OF UNIT HEATER 16'-0" AFF. ADJUST LOUVER TO DIRECT AIR DOWNWARD AT APPROXIMATELY 30°. 1" HWS AND HWR BRANCH LINES TO UNIT HEATER.
3. REFRIGERANT PIPING TO SHARE SUPPORT FROM STRUCTURE WITH NON-POTABLE WATER AND COMPRESS AIR LINES. SUPPORT TO BE PROVIDED BY PC, COORDINATE EXACT LOCATION WITH PC.
4. HOT WATER SYSTEM BALANCE VALVE. BALANCE TO 5 GPM (10% OF PUMP FLOW).

36x24 PLOT SHEET

NEW YORK STATE OF OPPORTUNITY. Office of General Services

DESIGN & CONSTRUCTION

CONSULTANT:

LaBella Powered by partnership.

MH PROFESSIONAL ENGINEERING, PLLC

WARNING:

THE ALTERATION OF THIS MATERIAL IN ANY WAY, UNLESS DONE UNDER THE DIRECTION OF A COMPARABLE PROFESSIONAL, I.E. ARCHITECT FOR AN ARCHITECT, ENGINEER FOR AN ENGINEER OR LANDSCAPE ARCHITECT FOR A LANDSCAPE ARCHITECT, IS A VIOLATION OF THE NEW YORK STATE EDUCATION LAW AND/OR REGULATIONS AND IS A CLASS 'A' MISDEMEANOR.

PROFESSIONAL ENGINEER MICHELLE M. HOUGHTALING 072116 STATE OF NEW YORK

CONTRACT: HVAC

TITLE: PROVIDE SUB-HEADQUARTERS BUILDING

LOCATION: DOT REGION 8, DUTCHESS COUNTY 205 LIME KILN RD. EAST FISHKILL, NEW YORK 12533

CLIENT: NEW YORK STATE DEPARTMENT OF TRANSPORTATION

MARK	DATE	DESCRIPTION
	10/17/2019	BID DOCUMENTS

PROJECT NUMBER:	45552-H
DESIGNED BY:	RS
DRAWN BY:	JM
FIELD CHECK:	
APPROVED:	MH

SHEET TITLE: PIPING PLAN

DRAWING NUMBER: M-102

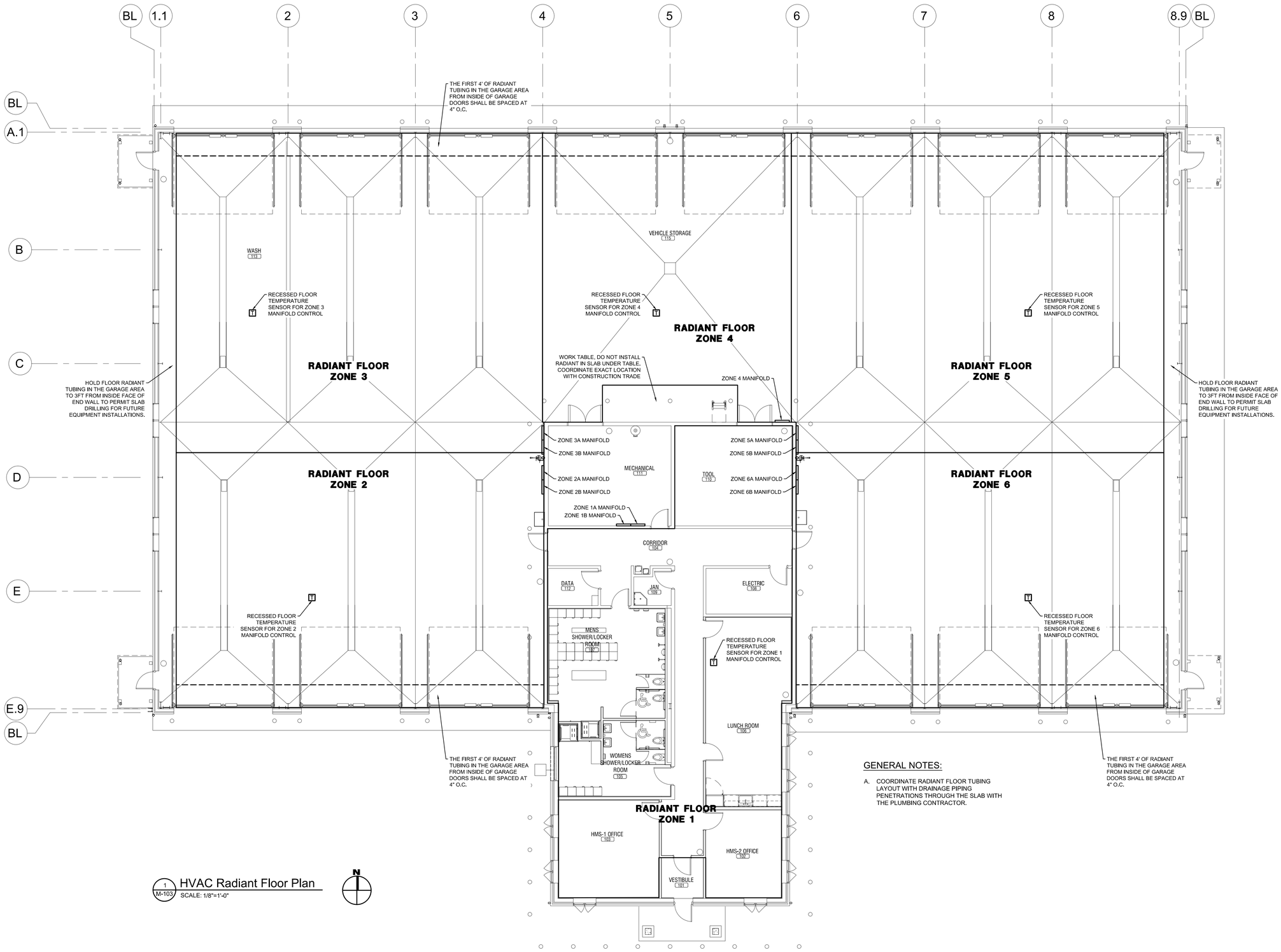

1 M-103 HVAC Radiant Floor Plan
SCALE: 1/8"=1'-0"

GENERAL NOTES:

A. COORDINATE RADIANT FLOOR TUBING LAYOUT WITH DRAINAGE PIPING PENETRATIONS THROUGH THE SLAB WITH THE PLUMBING CONTRACTOR.

36x24 PLOT SHEET

NEW YORK STATE OF OPPORTUNITY. Office of General Services

DESIGN & CONSTRUCTION

CONSULTANT:

LaBella Powered by partnership.

MH PROFESSIONAL ENGINEERING, PLLC

WARNING:

THE ALTERATION OF THIS MATERIAL IN ANY WAY, UNLESS DONE UNDER THE DIRECTION OF A COMPARABLE PROFESSIONAL, I.E. ARCHITECT FOR AN ARCHITECT, ENGINEER FOR AN ENGINEER OR LANDSCAPE ARCHITECT FOR A LANDSCAPE ARCHITECT, IS A VIOLATION OF THE NEW YORK STATE EDUCATION LAW AND/OR REGULATIONS AND IS A CLASS 'A' MISDEMEANOR.

PROFESSIONAL ENGINEER MICHELLE M. HOUGHTALING 072116 STATE OF NEW YORK

CONTRACT: HVAC

TITLE: PROVIDE SUB-HEADQUARTERS BUILDING

LOCATION: DOT REGION 8, DUTCHESS COUNTY 205 LIME KILN RD. EAST FISHKILL, NEW YORK 12533

CLIENT: NEW YORK STATE DEPARTMENT OF TRANSPORTATION

MARK	DATE	DESCRIPTION
	10/17/2019	BID DOCUMENTS

PROJECT NUMBER:	45552-H
DESIGNED BY:	RS
DRAWN BY:	JM
FIELD CHECK:	
APPROVED:	MH

SHEET TITLE: RADIANT FLOOR PLAN

DRAWING NUMBER: M-103

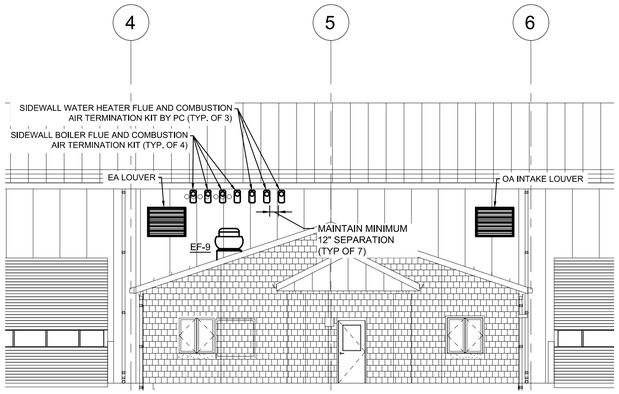

1 M-104 South Elevation
SCALE: 1/8"=1'-0"

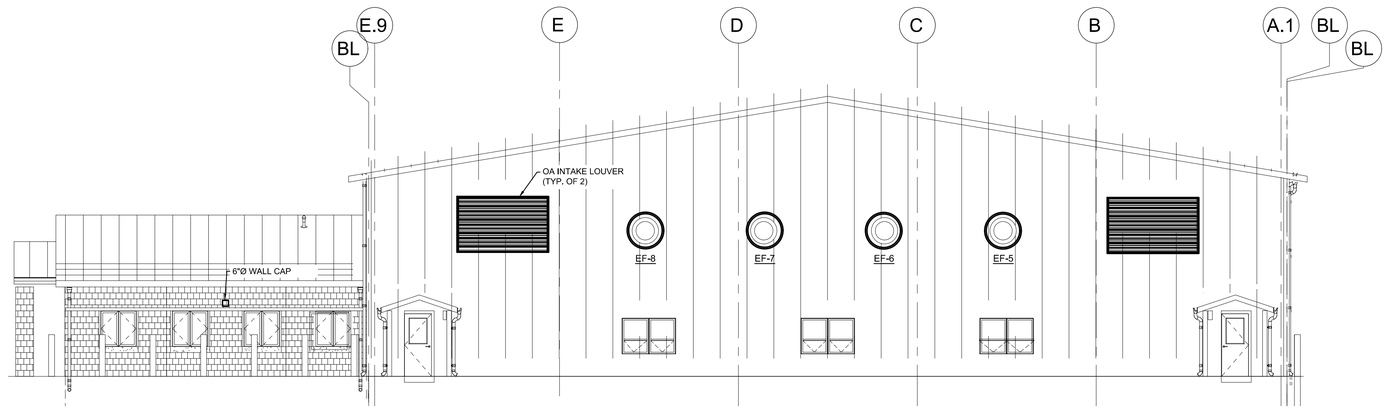

2 M-104 East Elevation
SCALE: 1/8"=1'-0"

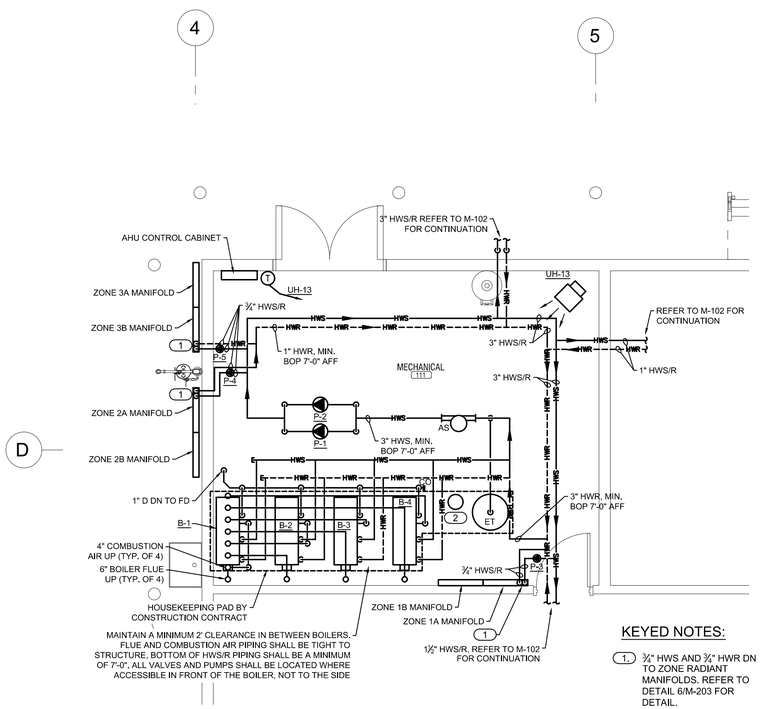

KEYED NOTES:

1. ¾" HWS AND ¾" HWR DN TO ZONE RADIANT MANIFOLDS. REFER TO DETAIL 6/M-203 FOR DETAIL.
2. CHEMICAL POT FEEDER.

3 M-104 Mechanical Room Plan
SCALE: 1/4"=1'-0"

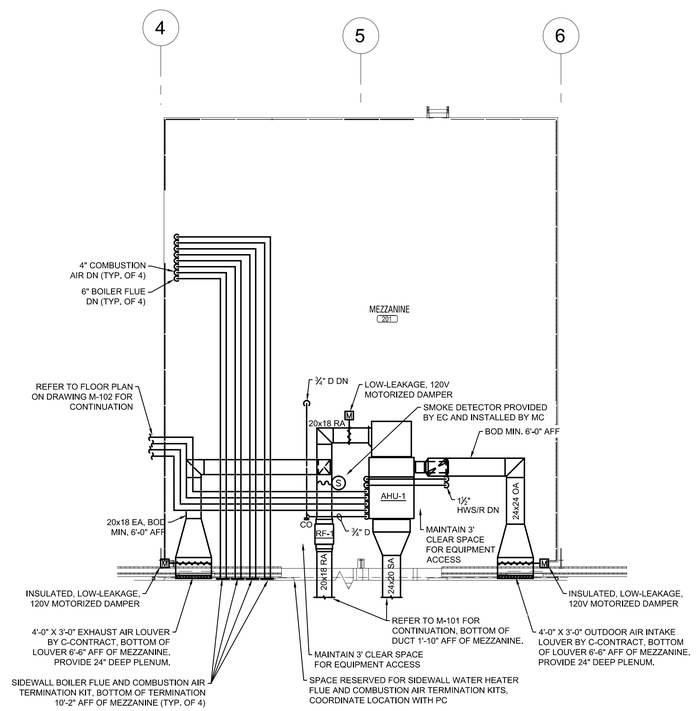

4 M-104 Mezzanine Plan
SCALE: 1/8"=1'-0"

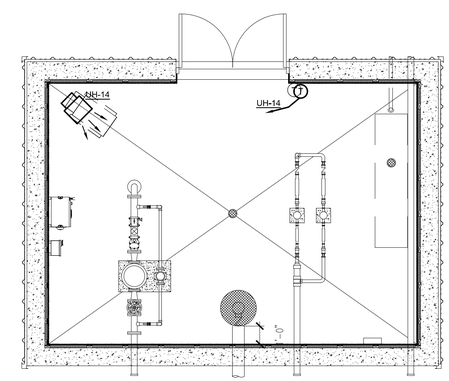

5 M-104 Pump House Plan
SCALE: 1/4"=1'-0"

36x24 PLOT SHEET

NEW YORK STATE OF OPPORTUNITY. Office of General Services

DESIGN & CONSTRUCTION

CONSULTANT:

LaBella Powered by partnership.

MH PROFESSIONAL ENGINEERING, PLLC

WARNING:

THE ALTERATION OF THIS MATERIAL IN ANY WAY, UNLESS DONE UNDER THE DIRECTION OF A COMPARABLE PROFESSIONAL, I.E. ARCHITECT FOR AN ARCHITECT, ENGINEER FOR AN ENGINEER OR LANDSCAPE ARCHITECT FOR A LANDSCAPE ARCHITECT, IS A VIOLATION OF THE NEW YORK STATE EDUCATION LAW AND/OR REGULATIONS AND IS A CLASS 'A' MISDEMEANOR.

PROFESSIONAL ENGINEER MICHELLE M. HOUGHTALING 072116 STATE OF NEW YORK

CONTRACT: HVAC

TITLE: PROVIDE SUB-HEADQUARTERS BUILDING

LOCATION: DOT REGION 8, DUTCHESS COUNTY
205 LIME KILN RD.
EAST FISHKILL, NEW YORK 12533

CLIENT: NEW YORK STATE DEPARTMENT OF TRANSPORTATION

MARK	DATE	DESCRIPTION
	10/17/2019	BID DOCUMENTS

PROJECT NUMBER:	45552-H
DESIGNED BY:	RS
DRAWN BY:	JM
FIELD CHECK:	
APPROVED:	MH

SHEET TITLE: DETAIL PLANS

DRAWING NUMBER: M-104

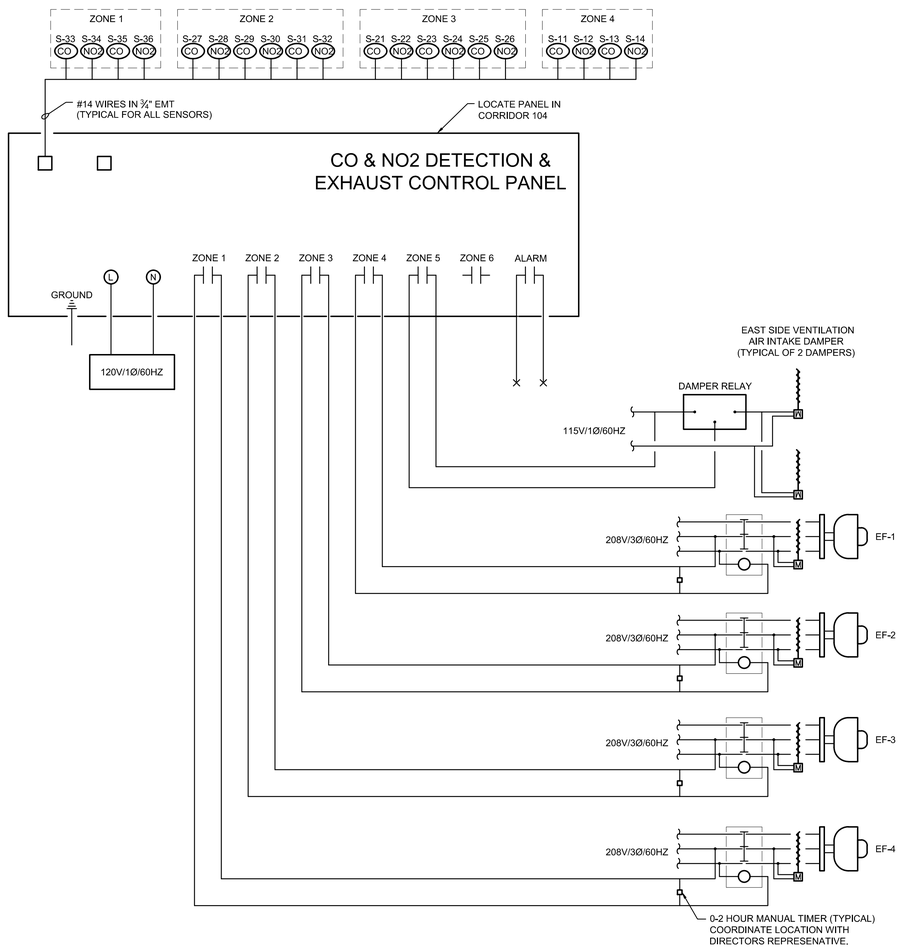

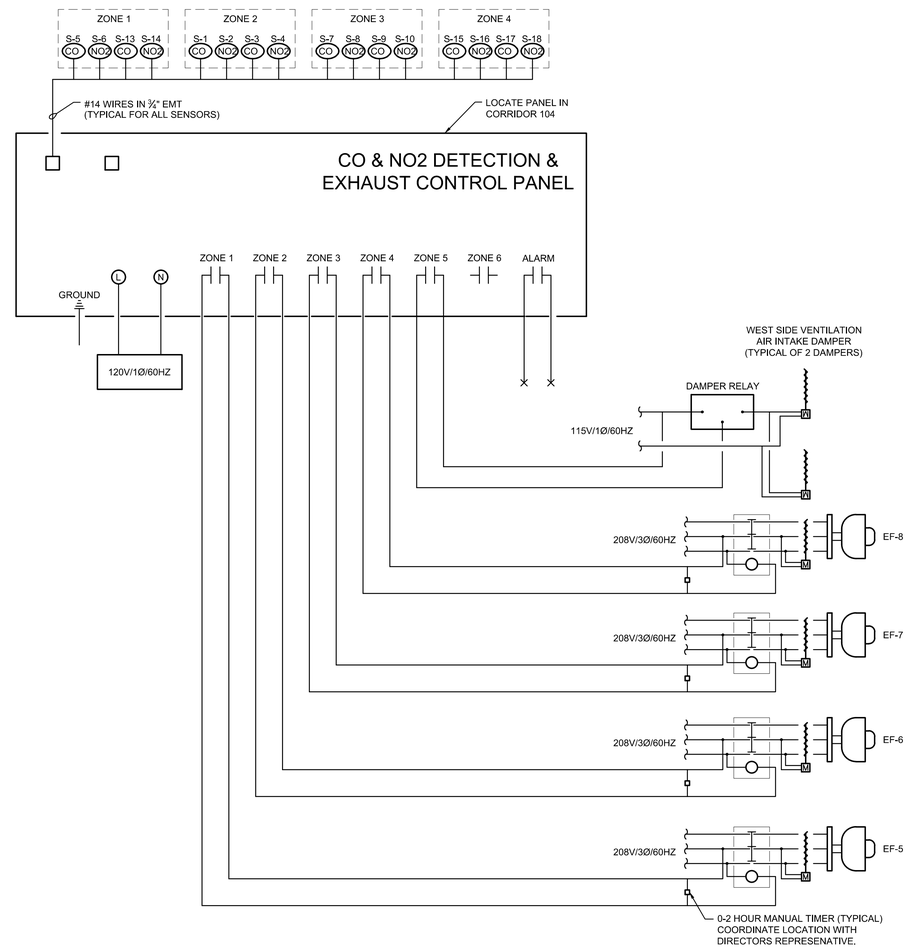

NOTES:

1. PROVIDE A CO AND NOX DETECTION CONTROL SYSTEM AS INDICATED ON THE DRAWING, AND SPECIFIED IN SECTION 236002.
2. SENSOR WIRING ON DETAILS INTENDED TO SHOW ZONING, ACTUAL ROUTING OF WIRING TO BE FIELD COORDINATED BY THE CONTRACTOR.

1 M-201 Ventilation Control Diagram
SCALE: NTS

SEQUENCE OF OPERATION:

1. THE BUILDING SHALL BE DIVIDED INTO 8 AREAS (ZONES). EACH WILL HAVE CO SENSOR(S), AND NO2 SENSOR(S) MOUNTED AS INDICATED ON M-101.
2. UPON A "LOW LEVEL" CONDITION, EACH ZONE WILL OPERATE ITS RESPECTIVE FAN AS WELL AS A COMMON OUTPUT TO OPERATE BOTH INTAKE DAMPERS ON A CALL FROM ANY ZONE.
3. UPON A "HIGH LEVEL" CONDITION AT ANY SENSOR IN ANY ZONE, THE PANEL WILL OPERATE ALL FANS.
4. UPON AN "ALARM LEVEL" CONDITION AT ANY SENSOR, THE ALARM CONTACT WILL CLOSE & THE AUDIBLE/VISUAL ALARM CIRCUIT ON THE CONTROL PANEL SHALL BE ACTIVATED.
5. PRESSING THE SILENCE BUTTON ON THE CONTROL PANEL WILL CANCEL THE AUDIBLE ALARM AND THE VISUAL ALARM. THE SILENCE BUTTON HAS NO EFFECT ON THE ALARM CONTACT.
6. LED STATUS INDICATOR FOR THE RESPECTIVE CHANNEL SHALL FLASH AT A SLOW RATE FOR A LOW LEVEL, FASTER FOR A HIGH LEVEL, & SHALL BE SOLID FOR AN ALARM LEVEL.
7. EF-11 TO OPERATE CONTINUOUSLY TO PROVIDE REQUIRED MINIMUM VENTILATION FOR GARAGE.

FACTORY CALIBRATED SETPOINTS

LOW LEVEL	35 PPM CO	0.4 PPM NO2
HIGH LEVEL	100 PPM CO	1 PPM NO2
ALARM LEVEL	100 PPM CO*	1 PPM NO2*

* - 15 MIN. TIME DELAY

36x24 PLOT SHEET

NEW YORK STATE OF OPPORTUNITY. Office of General Services
DESIGN & CONSTRUCTION

CONSULTANT:
LaBella Powered by partnership.
MH PROFESSIONAL ENGINEERING, PLLC

WARNING:
THE ALTERATION OF THIS MATERIAL IN ANY WAY, UNLESS DONE UNDER THE DIRECTION OF A COMPARABLE PROFESSIONAL, I.E. ARCHITECT FOR AN ARCHITECT, ENGINEER FOR AN ENGINEER OR LANDSCAPE ARCHITECT FOR A LANDSCAPE ARCHITECT, IS A VIOLATION OF THE NEW YORK STATE EDUCATION LAW AND/OR REGULATIONS AND IS A CLASS 'A' MISDEMEANOR.

PROFESSIONAL ENGINEER MICHELLE M. HOUGHTALING 072116 STATE OF NEW YORK

CONTRACT: HVAC

TITLE: PROVIDE SUB-HEADQUARTERS BUILDING

LOCATION: DOT REGION 8, DUTCHESS COUNTY
205 LIME KILN RD.
EAST FISHKILL, NEW YORK 12533

CLIENT: NEW YORK STATE DEPARTMENT OF TRANSPORTATION

MARK	DATE	DESCRIPTION
	10/17/2019	BID DOCUMENTS

PROJECT NUMBER:	45552-H
DESIGNED BY:	RS
DRAWN BY:	JM
FIELD CHECK:	
APPROVED:	MH

SHEET TITLE: MECHANICAL DETAILS

DRAWING NUMBER: M-201

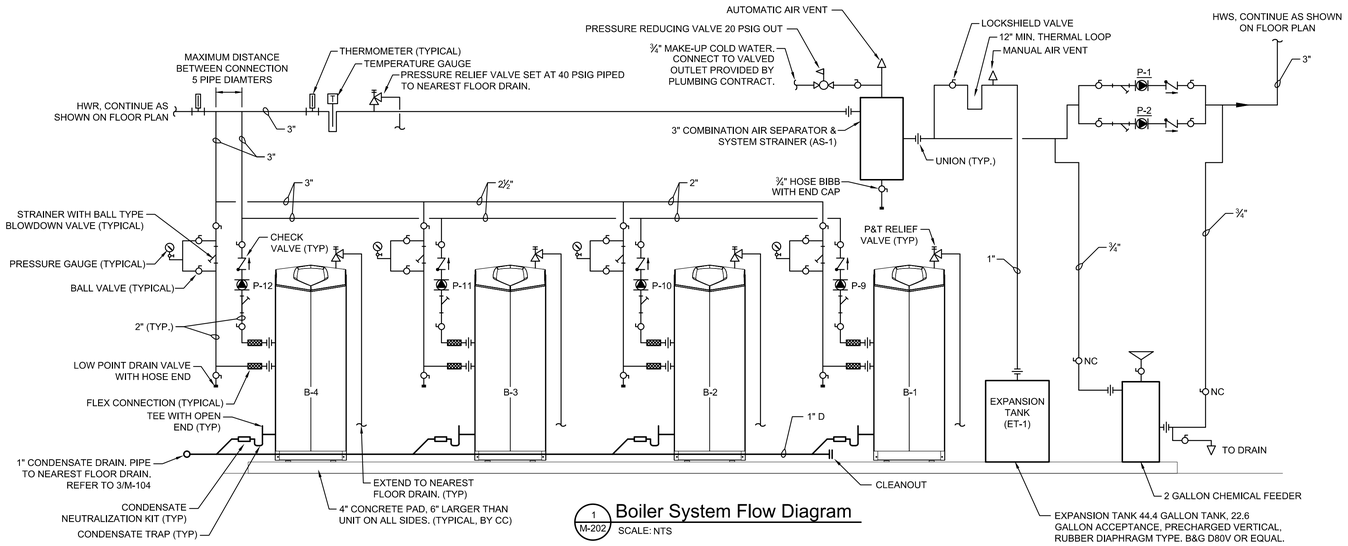

1 M-202 Boiler System Flow Diagram
SCALE: NTS

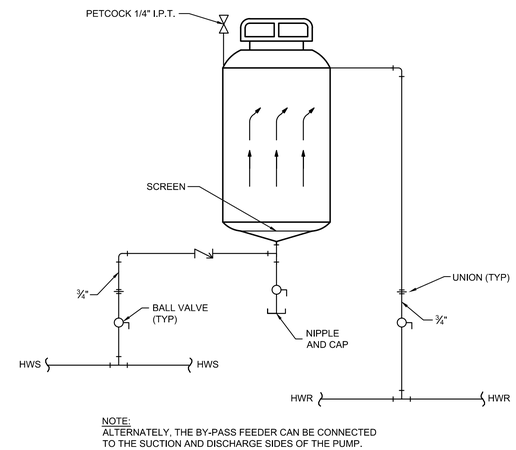

NOTE:
ALTERNATELY, THE BY-PASS FEEDER CAN BE CONNECTED TO THE SUCTION AND DISCHARGE SIDES OF THE PUMP.

2 M-202 Chemical Bypass Feeder Piping Schematic
SCALE: NTS

HEATING HOT WATER SEQUENCE OF OPERATION:

1. WHEN OUTSIDE AIR THERMOSTAT SENSES TEMPERATURE BELOW 60° F(ADJ) FOR A MINIMUM OF TWO HOURS, THE BOILER PUMP AND CIRCULATING PUMP STARTS. AS THE WATER FLOW IS PROVEN THE BOILER CONTROLS ARE ENERGIZED.
2. UPON A DROP IN HOT WATER SUPPLY TEMPERATURE, Tw, 10 DEGREES BELOW THE SETPOINT OF 180°F (ADJ.), THE LEAD BOILER SHALL START AND RUN. IF THE LEAD BOILER IS AT FULL FIRE AND CANNOT MAINTAIN SETPOINT, THE LAG BOILER SHALL START.
3. WHEN HOT WATER SUPPLY TEMPERATURE (Tw) EXCEEDS 5 DEGREES ABOVE SCHEDULED SETPOINT BOILER SHALL SHUT OFF.
4. THE AUTOMATIC ALTERNATION CIRCUIT SHALL OPERATE FIRST ONE CIRCULATING PUMP THEN THE OTHER ON EACH SUCCESSIVE CALL FOR PUMP OPERATION FROM THE OUTSIDE AIR TEMPERATURE THERMOSTAT. IF ONE MOTOR IS RUNNING AND ITS DISCONNECT SWITCH IS OPENED, AN OVERLOAD RELAY TRIPS, OR THE STARTER IS DE-ENERGIZED FOR ANY REASON, THE OTHER PUMP MOTOR SHALL AUTOMATICALLY BE STARTED AND A PANEL MOUNTED ALARM LIGHT SHALL FLASH.
5. WHEN OUTSIDE AIR THERMOSTAT SENSES TEMPERATURE ABOVE 60° F, FOR A MINIMUM OF TWO HOURS, THE BOILERS SHALL SHUT DOWN, THE CONTROL SHALL BE DE-ENERGIZED AND THE CIRCULATING PUMPS SHALL BE SHUT OFF.
6. THE HOT WATER SUPPLY TEMPERATURE SHALL BE RESET BASED ON THE OUTSIDE AIR TEMPERATURE ACCORDING TO THE FOLLOWING SCHEDULE:
   0°F OUTSIDE AIR, 180°F SUPPLY WATER
   60°F OUTSIDE AIR, 105°F SUPPLY WATER

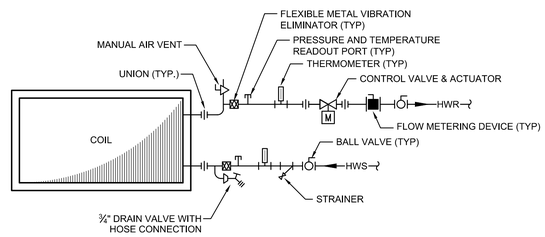

3 M-202 Air Handling Unit Heating Coil Piping Detail
SCALE: NTS

AIR HANDLING UNIT SEQUENCE OF OPERATION:

1. PROVIDE REMOTE CONTROL PANEL WITH VISUAL DISPLAY IN DATA ROOM TO ACCESS STATUS OF ALL INPUTS AND OUTPUTS, CHANGE SETPOINTS, AND VISUALLY INDICATE ALARMS.
2. THE AHU SHALL OPERATE CONTINUOUSLY DURING THE OCCUPIED TIME SCHEDULE. THE AHU WILL BE OFF DURING THE UNOCCUPIED PERIODS. THE RETURN FAN WILL OPERATE WHENEVER THE AHU IS OPERATING. WHEN THE AHU IS OPERATING IN THE OCCUPIED MODE, THE OA, RA AND EA WILL BE OPEN TO PRE-SET MINIMUM POSITIONS. IN THE UNOCCUPIED MODE, THE OA AND EA DAMPERS WILL BE CLOSED.
3. THE COOLING COIL CONTROLS WILL MODULATE TO MAINTAIN THE SPACE TEMPERATURE SETPOINT. THE HEATING COIL CONTROL VALVE WILL MODULATE TO MAINTAIN A DISCHARGE AIR TEMPERATURE OF 90°F. A ON A CALL FOR COOLING, IF THE OA ENTHALPY IS LESS THAN THE RETURN AIR ENTHALPY, THE ECONOMIZER CYCLE IS ENABLED AND THE OA, RA AND EA DAMPERS WILL MODULATE TO MAINTAIN THE SPACE TEMPERATURE.
4. IF ADDITIONAL COOLING IS REQUIRED AND THE OUTDOOR AIR TEMPERATURE IS GREATER THAT 65°F, THE DX COIL AND ACCU-1 SHALL CYCLE TO MAINTAIN 75°F (ADJ) SET POINT, SPACE TEMPERATURE. THE HEATING COIL VALVE SHALL BE FULLY CLOSED AND THE OA, RA AND EA DAMPERS WILL MODULATE TO THE MINIMUM OUTDOOR AIR POSITION.
5. IF HEATING IS REQUIRED AND THE OUTDOOR AIR TEMPERATURE IS LESS THAN 60°F, THE RADIANT FLOOR SYSTEM WILL BE ON AND THE HEATING COIL CONTROL VALVE WILL MODULATE TO MAINTAIN THE DISCHARGE AIR TEMPERATURE SETPOINT.
6. WHEN THE FREEZE STAT REACHES SETPOINT OF 38°F(ADJ), THE SF AND RF FANS SHALL SHUT OFF, THE OA AND EA DAMPERS WILL CLOSE, THE RA DAMPER WILL MODULATE TO FULL OPEN, AN ALARM WILL BE ACTIVATED, AND THE PANEL WILL INDICATE THE ALARM. THE 3-WAY HEATING CONTROL VALVE SHALL MODULATE TO THE FULL FLOW POSITION. THE UNIT SHALL BE RESTARTED MANUALLY FROM THE PANEL.
7. EF-9 SHALL OPERATE BASED ON THE SAME TIME CLOCK.

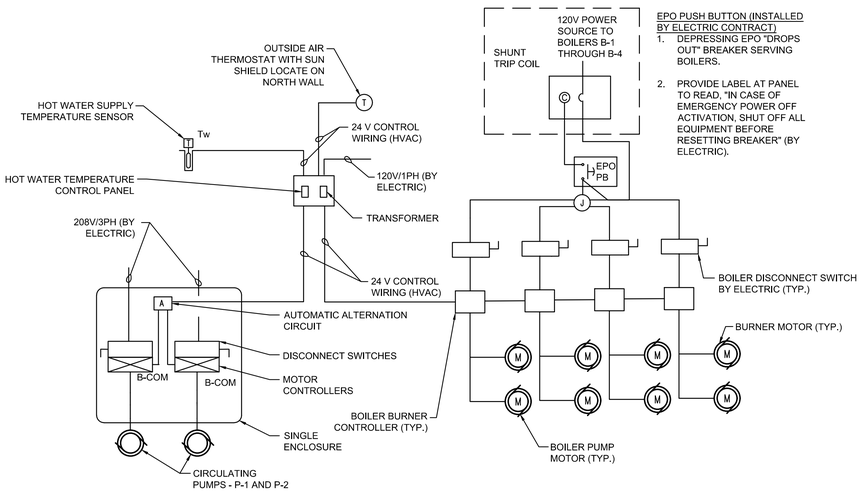

EPO PUSH BUTTON (INSTALLED BY ELECTRIC CONTRACT)
1. DEPRESSING EPO "DROPS OUT" BREAKER SERVING BOILERS.
2. PROVIDE LABEL AT PANEL TO READ, "IN CASE OF EMERGENCY POWER OFF ACTIVATION, SHUT OFF ALL EQUIPMENT BEFORE RESETTING BREAKER" (BY ELECTRIC).

4 M-202 Hot Water Boiler and Circulating Pumps Control Wiring Schematic
SCALE: NTS

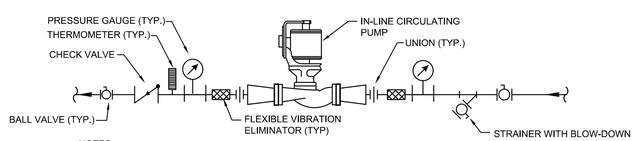

NOTES:
PUMP MOTOR SHALL BE INSTALLED WITH ITS CENTERLINE PARALLEL OR PERPENDICULAR TO THE FLOOR DEPENDING ON PUMP ORIENTATION, SUPPORT PUMP/MOTOR PER MANUFACTURER RECOMMENDATIONS

5 M-202 Typical In-Line Pump Piping Schematic
SCALE: NTS

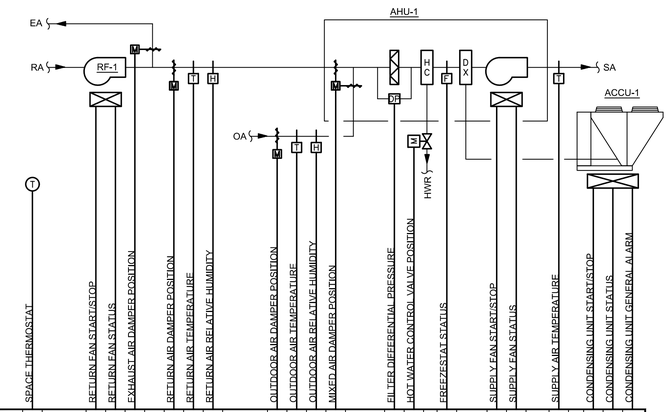

	SPACE THERMOSTAT	RETURN FAN START/STOP	RETURN FAN STATUS	EXHAUST AIR DAMPER POSITION	RETURN AIR DAMPER POSITION	RETURN AIR TEMPERATURE	RETURN AIR RELATIVE HUMIDITY	OUTDOOR AIR DAMPER POSITION	OUTDOOR AIR TEMPERATURE	OUTDOOR AIR RELATIVE HUMIDITY	MIXED AIR DAMPER POSITION	FILTER DIFFERENTIAL PRESSURE	HOT WATER CONTROL VALVE POSITION	FREEZESTAT STATUS	SUPPLY FAN START/STOP	SUPPLY FAN STATUS	SUPPLY AIR TEMPERATURE	CONDENSING UNIT START/STOP	CONDENSING UNIT STATUS	CONDENSING UNIT GENERAL ALARM
AI	●					●	●			●	●			●						●			
AO															●								
DI				●												●			●				●	●
DO			●		●		●			●			●					●				●		
GRAPHIC	●			●	●		●	●	●		●	●	●	●	●		●		●		●		●	
TREND	●		●	●				●	●			●	●			●			●	●	●		●	●
ALARM	●			●										●		●			●					●

6 M-202 AHU-1, RF-1, & ACCU-1 Control Diagram and Points LIst
SCALE: NTS

36x24 PLOT SHEET

NEW YORK STATE OF OPPORTUNITY. Office of General Services
DESIGN & CONSTRUCTION

CONSULTANT:
LaBella Powered by partnership.
MH PROFESSIONAL ENGINEERING, PLLC

WARNING:
THE ALTERATION OF THIS MATERIAL IN ANY WAY, UNLESS DONE UNDER THE DIRECTION OF A COMPARABLE PROFESSIONAL, I.E. ARCHITECT FOR AN ARCHITECT, ENGINEER FOR AN ENGINEER OR LANDSCAPE ARCHITECT FOR A LANDSCAPE ARCHITECT, IS A VIOLATION OF THE NEW YORK STATE EDUCATION LAW AND/OR REGULATIONS AND IS A CLASS 'A' MISDEMEANOR.

PROFESSIONAL ENGINEER MICHELLE M. HOUGHALEN 072116 STATE OF NEW YORK

CONTRACT: HVAC
TITLE: PROVIDE SUB-HEADQUARTERS BUILDING
LOCATION: DOT REGION 8, DUTCHESS COUNTY 205 LIME KILN RD. EAST FISHKILL, NEW YORK 12533
CLIENT: NEW YORK STATE DEPARTMENT OF TRANSPORTATION

MARK	DATE	DESCRIPTION
	10/17/2019	BID DOCUMENTS

PROJECT NUMBER: 45552-H
DESIGNED BY: RS
DRAWN BY: JM
FIELD CHECK:
APPROVED: MH
SHEET TITLE: MECHANICAL DETAILS
DRAWING NUMBER: M-202

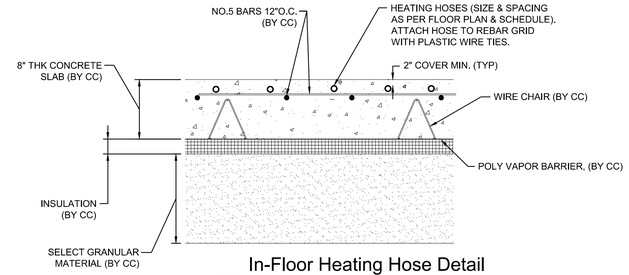

1 M-203 In-Floor Heating Hose Detail for Zone 2 - 6
SCALE: NTS

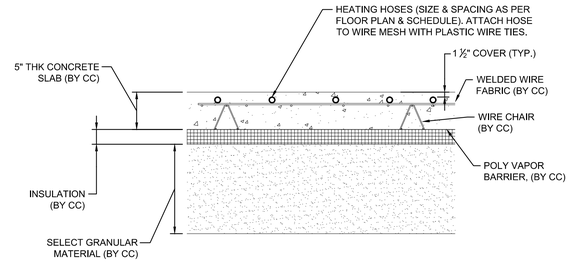

2 M-203 In-Floor Heating Hose Detail for Zone 1
SCALE: NTS

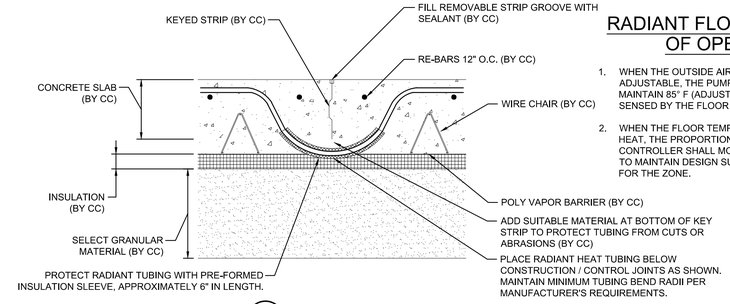

3 M-203 Construction Joint Detail
SCALE: NTS

RADIANT FLOOR SEQUENCE OF OPERATION:

1. WHEN THE OUTSIDE AIR TEMPERATURE IS BELOW 65°F ADJUSTABLE, THE PUMP SHALL RUN CONSTANTLY TO MAINTAIN 85° F (ADJUSTABLE) SLAB TEMPERATURE AS SENSED BY THE FLOOR TEMPERATURE SENSOR.
2. WHEN THE FLOOR TEMPERATURE SENSOR CALLS FOR HEAT, THE PROPORTIONAL TEMPERATURE CONTROLLER SHALL MODULATE THE CONTROL VALVE TO MAINTAIN DESIGN SUPPLY WATER TEMPERATURE FOR THE ZONE.

NOTES:

1. H - CONTRACT TO PROVIDE TUBING, AND ALL HARDWARE TO SECURE TUBING.
2. C - CONTRACT TO PLACE AND FINISH CONCRETE SLAB WITHOUT ALTERATION OF TUBING.

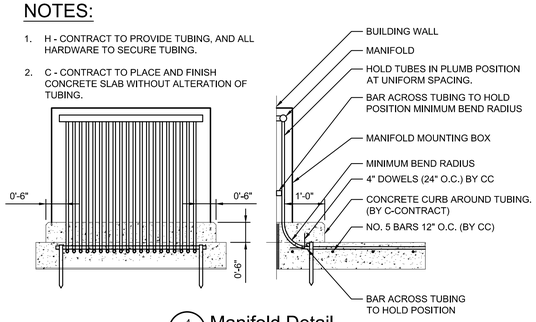

4 M-203 Manifold Detail
SCALE: NTS

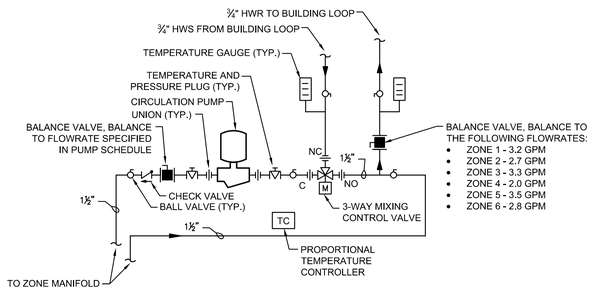

5 M-203 Zone Flow Control Diagram
SCALE: NTS

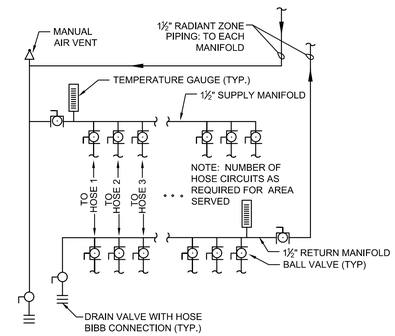

RADIANT FLOOR HEATING HOSES, INSULATE FROM VALVE TO FLOOR PROVIDE PROTECTIVE BUSHINGS WHERE TUBES ENTER CONCRETE FLOOR, (TYP.)

6 M-203 Typical Radiant Floor Piping and Manifold Detail
SCALE: NTS

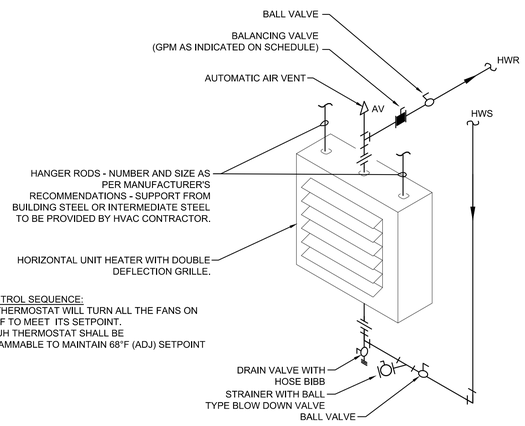

UH CONTROL SEQUENCE:
1. THE THERMOSTAT WILL TURN ALL THE FANS ON AND OFF TO MEET ITS SETPOINT.
2. THE UH THERMOSTAT SHALL BE PROGRAMMABLE TO MAINTAIN 68°F (ADJ) SETPOINT

7 M-203 Typical Horizontal Unit Heater Piping Detail
SCALE: NTS

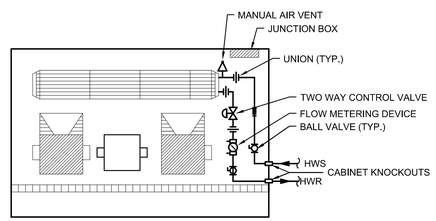

CUH CONTROL SEQUENCE:
1. THE THERMOSTAT WILL CYCLE THE FAN AND THE CONTROL VALVE TO MEET ITS SETPOINT.
2. THE CUH THERMOSTAT SHALL BE PROGRAMMABLE TO MAINTAIN 68°F (ADJ) SETPOINT.

8 M-203 Hot Water Cabinet Heater Detail
SCALE: NTS

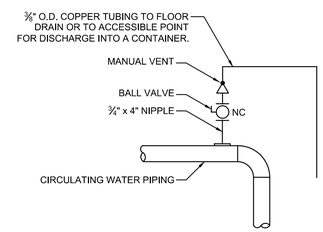

9 M-203 Typical High Point Air Vent Detail
SCALE: NTS

NEW YORK STATE OF OPPORTUNITY. Office of General Services
DESIGN & CONSTRUCTION

CONSULTANT:
LaBella Powered by partnership.
MH PROFESSIONAL ENGINEERING, PLLC

WARNING:
THE ALTERATION OF THIS MATERIAL IN ANY WAY, UNLESS DONE UNDER THE DIRECTION OF A COMPARABLE PROFESSIONAL, I.E. ARCHITECT FOR AN ARCHITECT, ENGINEER FOR AN ENGINEER OR LANDSCAPE ARCHITECT FOR A LANDSCAPE ARCHITECT, IS A VIOLATION OF THE NEW YORK STATE EDUCATION LAW AND/OR REGULATIONS AND IS A CLASS 'A' MISDEMEANOR.

PROFESSIONAL ENGINEER MICHELLE M. HOUGHALEN 072116 STATE OF NEW YORK

CONTRACT: HVAC
TITLE: PROVIDE SUB-HEADQUARTERS BUILDING
LOCATION: DOT REGION 8, DUTCHESS COUNTY 205 LIME KILN RD. EAST FISHKILL, NEW YORK 12533
CLIENT: NEW YORK STATE DEPARTMENT OF TRANSPORTATION

MARK	DATE	DESCRIPTION
	10/17/2019	BID DOCUMENTS

PROJECT NUMBER:	45552-H
DESIGNED BY:	RS
DRAWN BY:	JM
FIELD CHECK:	
APPROVED:	MH

SHEET TITLE: MECHANICAL DETAILS

DRAWING NUMBER: M-203

36x24 PLOT SHEET

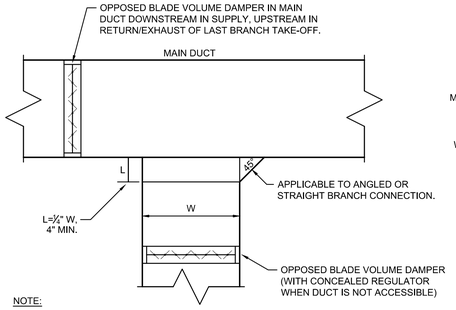

NOTE:

1. BRANCH TAKE-OFF REQUIRING VOLUME DAMPERS ARE IN BOTH THE HORIZONTAL AND VERTICAL POSITION.
2. ALL DUCT TAKEOFFS SHALL BE CONSTRUCTED WITH 45° FITTING, REGARDLESS OF HOW IT IS REPRESENTED ON THE PLANS.

1 M-204 Branch Take-Off Detail
SCALE: NTS

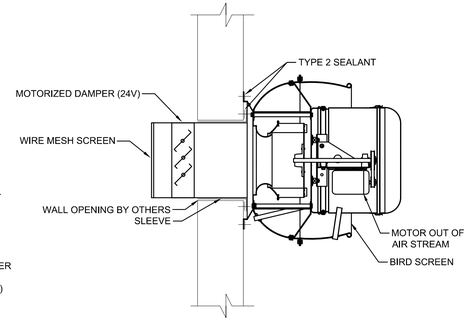

2 M-204 Typical Wall Exhauster Detail
SCALE: NTS

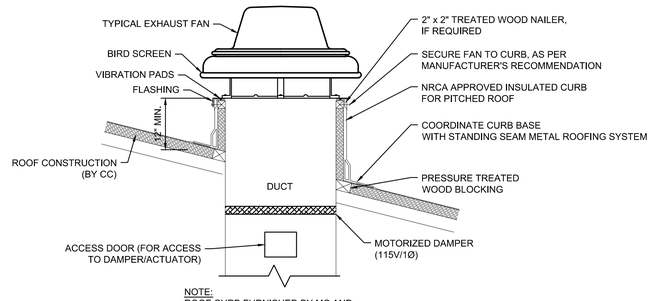

NOTE:
ROOF CURB FURNISHED BY MC AND INSTALLED BY CC

3 M-204 Typical Roof Fan Detail
SCALE: NTS

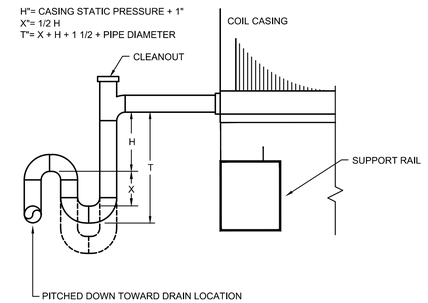

4 M-204 Air Handling Unit Condensate Drain Piping Detail
SCALE: NTS

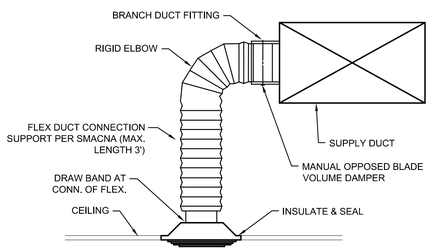

5 M-204 Typical Duct Diffuser Connection Detail
SCALE: NTS

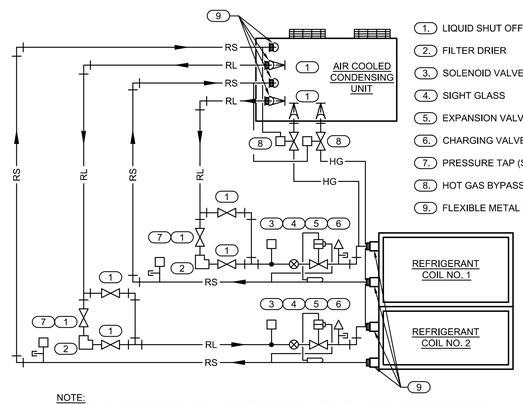

1. LIQUID SHUT OFF VALVE
2. FILTER DRIER
3. SOLENOID VALVE
4. SIGHT GLASS
5. EXPANSION VALVE
6. CHARGING VALVE
7. PRESSURE TAP (SUPER HEAT ADJUSTMENT)
8. HOT GAS BYPASS VALVE
9. FLEXIBLE METAL CONNECTION

NOTE:
1. SINGLE COMPRESSOR UNITS SAME PIPING DETAIL APPLIES, WITHOUT HOT-GAS BY-PASS.
2. CONFIRM PIPING ARRANGEMENT WITH MANUFACTURER'S PRINTED INSTALLATION INSTRUCTIONS COORDINATED WITH ACTUAL PIPING INSTALLATION ROUTING.

6 M-204 AHU Refrigerant Piping with Hot Gas Bypass
SCALE: NTS

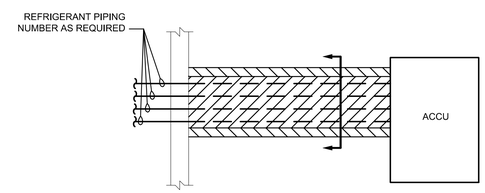

PLAN VIEW

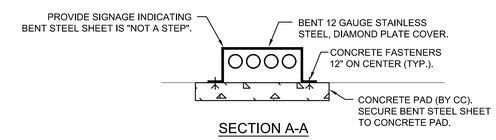

SECTION A-A

NOTE:
1. PROVIDE SHOP DRAWING TO INDICATE CONFIGURATION W/ PIPING, PIPING SUPPORT, COVER, AND SLAB.
2. PIPING LENGTHS AND ROUTING VARIES. PROVIDE COVER OVER ALL HORIZONTAL REFRIGERANT PIPING.

7 M-204 Refrigerant Piping Cover Detail
SCALE: NTS

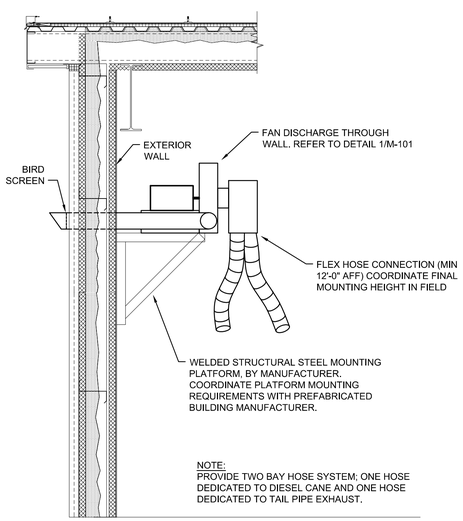

NOTE:
PROVIDE TWO BAY HOSE SYSTEM; ONE HOSE DEDICATED TO DIESEL CANE AND ONE HOSE DEDICATED TO TAIL PIPE EXHAUST.

8 M-204 Vehicle Exhaust System Detail for Drop Down Applications
SCALE: NTS

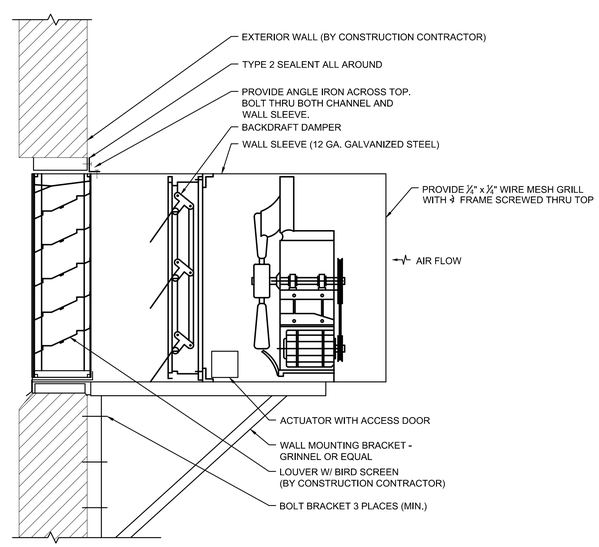

9 M-204 Propeller Fan Detail
SCALE: NTS

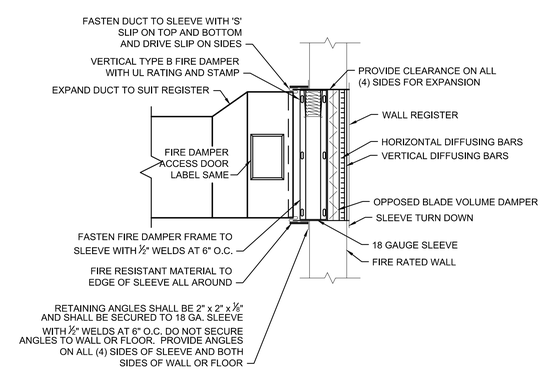

10 M-204 Fire Damper at Wall Register Detail
SCALE: NTS

36x24 PLOT SHEET

NEW YORK STATE OF OPPORTUNITY. Office of General Services
DESIGN & CONSTRUCTION

CONSULTANT:
LaBella Powered by partnership.
MH PROFESSIONAL ENGINEERING, PLLC

WARNING:
THE ALTERATION OF THIS MATERIAL IN ANY WAY, UNLESS DONE UNDER THE DIRECTION OF A COMPARABLE PROFESSIONAL, I.E. ARCHITECT FOR AN ARCHITECT, ENGINEER FOR AN ENGINEER OR LANDSCAPE ARCHITECT FOR A LANDSCAPE ARCHITECT, IS A VIOLATION OF THE NEW YORK STATE EDUCATION LAW AND/OR REGULATIONS AND IS A CLASS 'A' MISDEMEANOR.

PROFESSIONAL ENGINEER MICHELLE M. HOUGHTALING 072116 STATE OF NEW YORK

CONTRACT: HVAC

TITLE: PROVIDE SUB-HEADQUARTERS BUILDING

LOCATION: DOT REGION 8, DUTCHESS COUNTY 205 LIME KILN RD. EAST FISHKILL, NEW YORK 12533

CLIENT: NEW YORK STATE DEPARTMENT OF TRANSPORTATION

MARK	DATE	DESCRIPTION
	10/17/2019	BID DOCUMENTS

PROJECT NUMBER: 45552-H
DESIGNED BY: RS
DRAWN BY: JM
FIELD CHECK:
APPROVED: MH

SHEET TITLE: MECHANICAL DETAILS

DRAWING NUMBER: M-204

ELECTRIC UNIT HEATER SCHEDULE

TAG	SERVICE	CFM	KW	TEMP RISE	NO. OF ELEMENTS	FAN HP	V	PHASE	BASIS OF DESIGN
UH-13	MER	80	5.0	42°F	1	1/40	208	1 Ø	MODINE HER 50
UH-14	PUMP HOUSE	80	5.0	42°F	1	1/40	208	1 Ø	MODINE HER 50

NOTES:
1. PROVIDE REMOTE LINE VOLTAGE WALL MOUNTED THERMOSTAT AND UNIT MOUNTED DISCONNECT SWITCH.
2. SUPPORT FROM STRUCTURE ABOVE.

HOT WATER CABINET HEATER SCHEDULE

TAG	LOCATION	ARRANGEMENT	CFM	MBH	GPM	E.W.T. (°F)	L.W.T. (°F)	W.P.D. (FT)	FAN MOTOR DATA			BASIS OF DESIGN
									HP	VOLT	PHASE	
CUH-1	CORRIDOR	VERTICAL CABINET	250 CFM	9.17	0.46	180	140	0.1	0.03	115	1	MODINE FC00200ABB

NOTES:
1. PROVIDE UNIT MOUNTED DISCONNECT AND THERMOSTAT.

HOT WATER PROPELLER TYPE UNIT HEATER SCHEDULE

TAG	TYPE	MBH	CFM	THROW (FT)	HOT WATER DATA				E.A.T. (F°)	V/PH	HP	MOUNTING HEIGHT (FT)	BASIS OF DESIGN
					GPM	E.W.T. (F°)	L.W.T. (F°)	W.P.D. (FT)					
UH-1 THROUGH UH-12	HORIZONTAL	100	2,900	41	6.3	180	140	0.3	60	115/1	1/3	16	MODINE HC 193

NOTES:
1. RATINGS BASED ON 60° E.A.T.
2. PROVIDE REMOTE WALL MOUNTED 115V THERMOSTAT, REFER TO PLANS FOR COUNT AND LOCATION.
3. PROVIDE EACH UNIT HEATER WITH A UNIT MOUNTED DISCONNECT SWITCH.

GAS FIRED BOILER SCHEDULE

TAG	LOCATION	NATURAL GAS					WATER			ELECTRICAL			VENT CATEGORY	BASIS OF DESIGN
		INPUT			OUTPUT		E.W.T. °F	L.W.T. °F	ΔP FT.	AMP	VOLTS	PHASE		
		MBH	CFH	WC	MBH	EFF								
B-1 - B-4	MECHANICAL ROOM	800	800	4"-14"	752	94%	140	180	12	2.7	115	1	IV	LOCHINVAR KNIGHT KB-801

NOTES:
1. REQUIRED GAS PRESSURE MAY VARY WITH BOILER MANUFACTURER. (MIN 4", MAX 14" WC).
2. PROVIDE CPVC OR POLYPROPYLENE 4" COMBUSTION AIR AND 6" VENT PIPE WITH SIDEWALL TERMINATION KIT. REFER TO MANUFACTURER'S WRITTEN INSTRUCTIONS FOR EXACT SIZES AND INSTALLATION REQUIREMENTS.
3. PROVIDE CONDENSATE NEUTRALIZATION KIT.
4. PROVIDE 30PSI ASME RELIEF VALVE.
5. SELECTION MADE ON THE PREMISE THAT THE BOILERS WILL OPERATE AS LEAD/LAG. PROVIDE CONTROLLER BY BOILER MANUFACTURER THAT IS CAPABLE OF LEAD/LAG CONTROL, BOILER PUMP CONTROL, AND OUTDOOR AIR RESET.

EXHAUST/RETURN FAN SCHEDULE

TAG	LOCATION	SERVICE	TYPE	CFM	ESP (IN W.G.)	FAN MOTOR DATA					BASIS OF DESIGN	NOTES
						RPM	BHP	HP	VOLT	Ø		
EF-1 - EF-8	GARAGE	VENTILATION	WALL CENTRIFUGAL	7,125	0.375	1088	2.07	3	208	3	COOK ACW-HP	1,2,4,6
EF-9	OFFICE ROOF	LOCKER ROOMS	ROOF CENTRIGFUGAL	810	0.5	1141	0.106	<1	115	1	COOK ACE-D-HP	1,4,5,7
EF-10	GARAGE	DIESEL EXHAUST	-	1,200	3.0			1	208	3	VENTAIRE UVS122/1/3	9,10
EF-11	GARAGE	VENTILATION	WALL PROPELLER	800	0.15	1550	-	1/8	115	1	COOK XWD	3,4,5,11
RF-1	MEZZANINE	AHU RETURN	IN-LINE CENTRIFUGAL	2,370	0.75	1136	0.65	<1	208	3	COOK SQN-B	1,5,8

NOTES:
1. BELT DRIVE FAN.
2. HAND, OFF, AUTO SWITCH WITH 0-2 HOUR TIMER.
3. PROVIDE BACKDRAFT DAMPER.
4. PROVIDE ALUMINUM BIRDSCREEN.
5. PROVIDE FACTORY MOUNT DISCONNECT SWITCH.
6. PROVIDE MOTORIZED DAMPER TIED TO FAN OPERATION.
7. DIRECT DRIVE FAN. PROVIDE FAN MOUNTED SPEED CONTROL FOR BALANCING.
8. PROVIDE COMBINATION SPRING AND NEOPRENE VIBRATION ISOLATION SUPPORTS. SIZE FOR THE ACTUAL EQUIPMENT CORNER WEIGHTS.
9. PROVIDE RUBBER IN SHEAR VIBRATION ISOLATION SUPPORTS.
10. PROVIDE 25' OF 6"Ø HIGH TEMP HOSE WITH A LIFTING SADDLE, TAILPIPE ADAPTER WITH VISE GRIP, AND SPRING POWERED CABLE REEL BALANCER WITH PULL DOWN.
11. PROVIDE OSHA WIRE GUARD AND WALL COLLAR.

AIR HANDLING UNIT SCHEDULE

TAG	LOCATION	CONFIGURATION	CFM	OA CFM	STATIC PRESSURE		SUPPLY FAN				HEATING COIL TAG	COOLING COIL TAG	MOTOR CONTROLLER TYPE	MCA	MOCP	BASIS OF DESIGN
					EXTERNAL (IN. W.G.)	TOTAL (IN. W.G.)	TYPE	RPM	BHP	HP	V/PH/Hz						
AHU-1	MEZZANINE	HORIZONTAL	3,220	900	0.75	1.74	PLENUM	2190	1.62	1.34	208/3/60	HC-1	CC-1	B-COM	7	15	AAON H3-CRB-8-0-162C-12L

NOTES:
1. PROVIDE COMBINATION SPRING AND NEOPRENE VIBRATION ISOLATION SUPPORTS SELECTED FOR THE FINAL CORNER WEIGHTS.

AIR COOLED CONDENSING UNIT SCHEDULE

TAG	LOCATION	SERVICE	REFRIG. TYPE	ARI NET CAPACITY (MBH)	EER	AMBIENT TEMP	SUCTION TEMP	ELECTRICAL				DIMENSIONS		BASIS OF DESIGN
								V/PH/Hz	COMP. CAPACITY STEPS %	MINIMUM CIRCUIT AMPACITY	MINIMUM FUSE SIZE	L x W x H (IN)	WEIGHT (LBS)	
ACCU-1	GROUND	AHU-1	R-410A	156.0	12.2	95	43	208/3/60	VARIABLE	62	80	94 x 47 x 57	1141	AAON CFA-013-B-A-8-DC00K

NOTES:
1. PROVIDE TWO REFRIGERANT LINESETS. REFER TO MANUFACTURER'S WRITTEN INSTRUCTIONS FOR FINAL SIZES.
2. PROVIDE FACTORY MOUNT DISCONNECT.

RADIANT FLOOR HOSE SCHEDULE

ZONE #	SERVING	HEATING HOSE			SQUARE FOOTAGE	FLOWRATE (GPM)	PRESSURE DROP (FT)	NUMBER OF CIRCUITS	ZONE CAPACITY, TOTAL (MBH)	TOTAL HEAT INTENSITY *** (BTU/ SQ. FT.)	DESIGN SUPPLY WATER TEMPERATURE (°F)
		DIA. (IN)	PRIMARY SPACING (IN)	MAX. CIRCUIT LENGTH (FT)							
1	ADMIN AREA MANIFOLD 1A & 1B	5/8	12	300	3,000	20.5	15.4	11	102.6	34.0	125
2	REPAIR GARAGE MANIFOLD 2A & 2B	5/8	12	300	2,850	17.3	10.1	12	86.4	30.0	125
3	REPAIR GARAGE MANIFOLD 3A & 3B	5/8	12	300	3,600	21.4	10.5	17	106.3	30.0	125
4	MECHANIC'S BAY MANIFOLD 4	5/8	12	300	2,075	13.0	9.5	9	65.3	31.0	125
5	REPAIR GARAGE MANIFOLD 5A & 5B	5/8	12	300	3,600	22.2	9.2	16	110.6	31.0	125
6	REPAIR GARAGE MANIFOLD 6A & 6B	5/8	12	300	2,850	18.0	11.3	12	89.4	31.0	125

NOTES:
1. HEAT INTENSITY IS BASED UPON DESIGN SUPPLY WATER TEMPERATURE AND 10°F TEMPERATURE DROP AVERAGED OVER ENTIRE AREA. MAXIMUM HEAT INTENSITY FOR RADIANT HEAT ZONES IS 40 BTU/SQ. FT. WITH 130°F SUPPLY WATER TEMPERATURE AND 10°F TEMPERATURE DROP.
2. PROVIDE 1-1/2" STAINLESS STEEL MANIFOLD. PRESSURE DROP LISTED ACCOUNTS FOR PRESSURE DROP THROUGH THE RADIANT LOOP AND MANIFOLD.
3. 100% WATER, NO GLYCOL IN THE SYSTEM.

PUMP SCHEDULE

UNIT #	SYSTEM APPLICATION	CAPACITY GPM	SPEED GPM	MOTOR HP	HEAD (FT.)	ELECTRICAL		REMARKS	BASIS OF DESIGN	NOTES
						VOLTS	PHASE			
P-1&2	PRIMARY HWS	110	3160	2.49	50	460	3	IN-LINE CENTRIFUGAL	B&G ECOCIRC XL 110-180	1, 2
P-3	RADIANT ZONE #1	20.5	3250	2/5	35	115	1	IN-LINE CENTRIFUGAL	B&G PL-55	-
P-4	RADIANT ZONE #2	17.3	3250	2/5	28	115	1	IN-LINE CENTRIFUGAL	B&G PL-55	-
P-5	RADIANT ZONE #3	21.4	3250	2/5	28	115	1	IN-LINE CENTRIFUGAL	B&G PL-55	-
P-6	RADIANT ZONE #4	13.0	3250	2/5	27	115	1	IN-LINE CENTRIFUGAL	B&G PL-55	-
P-7	RADIANT ZONE #5	22.2	3250	2/5	27	115	1	IN-LINE CENTRIFUGAL	B&G PL-55	-
P-8	RADIANT ZONE #6	18.0	3250	2/5	29	115	1	IN-LINE CENTRIFUGAL	B&G PL-55	-
P-9 - P-12	BOILER PUMPS	37.5	2265	0.48	25	208/230	1	IN-LINE CENTRIFUGAL	B&G ECOCIRC XL 65-130	2

NOTES:
1. ONE PUMP, EITHER P-1 OR P-2, SHALL BE THE PRIMARY PUMP AND THE REMAINING WILL BE STANDBY.
2. PROVIDE INTEGRAL VFD WITH CONTROLS CAPABLE OF MODULATING PUMP SPEED BASED ON SYSTEM PRESSURE.

AIR DISTRIBUTION DEVICES SCHEDULE

SYMBOL	TYPE	CFM RANGE	FACE SIZE		NECK SIZE	PD	BASIS OF DESIGN	NOTES
			WIDTH	LENGTH				
S-1	CEILING PLAQUE DIFFUSER	0-100	24"	24"	6" Ø	0.02	TITUS OMNI	3,4,6
		101-175	24"	24"	8" Ø	0.02		
		176-275	24"	24"	10" Ø	0.02		
		276-400	24"	24"	12" Ø	0.02		
S-2, R-2	LINEAR BAR REGISTER	0-200	14"	8"	12" x 6"	0.02	TITUS 350RL	1,4,5
		201-280	14"	10"	12" x 8"	0.02		
		281-440	14"	14"	12" x 12"	0.02		
R-1, E-1	CEILING PERFORATED REGISTER	0-100	24"	24"	6" Ø	0.02	TITUS PAR-AA	3,4,6
		101-175	24"	24"	8" Ø	0.02		
		176-275	24"	24"	10" Ø	0.02		
		276-400	24"	24"	12" Ø	0.02		
		401-600	24"	24"	14" Ø	0.02		
E-2	LINEAR BASE REGISTER	0-100	8"	8"	6" x 6"	0.02	TITUS 350FL	2,4,5

NOTES:
1. STEEL CONSTRUCTION.
2. ALUMINUM CONSTRUCTION.
3. ALUMINUM CONSTRUCTION IN RESTROOMS AND SHOWER AREAS. STEEL CONSTRUCTION IN ALL OTHER LOCATIONS.
4. INTEGRAL OPPOSED BLADE OR BUTTERFLY BALANCE DAMPER.
5. SURFACE MOUNT. LOUVERED BLADES AT 35° DEFLECTION AND SPACED EVERY ¾". BLADES PARALLEL TO LONG DIMENSION.
6. LAY-IN, REFER TO ARCHITECTURAL REFLECTED CEILING PLAN.

HEATING COIL SCHEDULE

MARK	CFM	TYPE	MAXIMUM FACE VELOCITY	MBH	FLUID SIDE					AIR SIDE	
					E.W.T.	L.W.T.	GPM	MAX. WPD (FT.)	ROWS	E.A.T.	L.A.T.
HC-1	3,220	WATER	500	247	180	150	17	5.2	2	55	124

COOLING COIL SCHEDULE

MARK	TYPE	MAX. FACE VELOCITY (FPM)	TOTAL (MBH)	SENS (MBH)	FLUID SIDE					AIR SIDE	
					REFRIGERANT	SUCTION	AREA (SQFT)	# OF CIRCUITS	ROWS	E.A.T. (DB/WB)	L.A.T. (DB/WB)
CC-1	DX	500	140.94	93.3	R-410A	43°F	7.2	2	6	81/68	54.9/53.7

36x24 PLOT SHEET

NEW YORK STATE OF OPPORTUNITY. Office of General Services

DESIGN & CONSTRUCTION

CONSULTANT:

LaBella Powered by partnership.

MH PROFESSIONAL ENGINEERING, PLLC

WARNING:
THE ALTERATION OF THIS MATERIAL IN ANY WAY, UNLESS DONE UNDER THE DIRECTION OF A COMPARABLE PROFESSIONAL, I.E. ARCHITECT FOR AN ARCHITECT, ENGINEER FOR AN ENGINEER OR LANDSCAPE ARCHITECT FOR A LANDSCAPE ARCHITECT, IS A VIOLATION OF THE NEW YORK STATE EDUCATION LAW AND/OR REGULATIONS AND IS A CLASS 'A' MISDEMEANOR.

PROFESSIONAL ENGINEER MICHELLE M. HOUGHTALING 072116 STATE OF NEW YORK

CONTRACT: HVAC

TITLE: PROVIDE SUB-HEADQUARTERS BUILDING

LOCATION: DOT REGION 8, DUTCHESS COUNTY
205 LIME KILN RD.
EAST FISHKILL, NEW YORK 12533

CLIENT: NEW YORK STATE DEPARTMENT OF TRANSPORTATION

MARK	DATE	DESCRIPTION
	10/17/2019	BID DOCUMENTS

PROJECT NUMBER: 45552-H

DESIGNED BY: RS

DRAWN BY: JM

FIELD CHECK:

APPROVED: MH

SHEET TITLE: SCHEDULES

DRAWING NUMBER: M-301

GAS- FIRED TANKLESS WATER HEATER SCHEDULE

TAG	LOCATION	GAS TYPE	DOMESTIC WATER VOLUME (GAL)	INPUT CAPACITY (MBH)	MIN. THERMAL EFFICIENCY	GAS PRESSURE RANGE (IN W.G.)	E.W.T. (°F)	L.W.T. (°F)	FLOWRATE AT 90°F TEMP RISE (GPM)	MIN. FLOWRATE (GPM)	V/PH	AMPS	MOCP	BASIS OF DESIGN
WH-2	MEZZANINE	NAT. GAS	0	199	97%	3.5 - 10.5	50	140	4.25	0.26	120/1	4 A	10 A	RINNAI CU199I
WH-3	MEZZANINE	NAT. GAS	0	199	97%	3.5 - 10.5	50	140	4.25	0.26	120/1	4 A	10 A	RINNAI CU199I

NOTES:
1. PROVIDE CONDENSATE NEUTRALIZER, GRAVITY DRAIN TO FLOOR DRAIN.
2. PROVIDE 3" CPVC OR POLYPROPYLENE COMBUSTION AIR AND FLUE VENTING WITH 3" X 5" CONCENTRIC SIDEWALL TERMINATION KIT.
3. PROVIDE PRESSURE RELIEF VALVE, ISOLATION VALVE KIT, VENT SCREENS AND VENT SCREEN SCREWS.
4. MOUNT UNIT ON A STANCHION SUPPORTED FROM THE FLOOR.

PUMP SCHEDULE

UNIT #	TYPE	LOCATION	SYSTEM APPLICATION	CAPACITY GPM	HEAD (FT.)	WATTS	ELECTRICAL		BASIS OF DESIGN	NOTES
							VOLTS	PHASE		
CP-1	IN-LINE	MECHANICAL ROOM	DOM. HW RECIRCULATION	2	15	125	120	1	B&G NBF-25	1

NOTES:
1. PROVIDE THERMOSTATIC SWITCH FOR PUMP OPERATION. INITIALLY SET TO TURN ON AT 100°F AND OFF AT 120°F.

GAS- FIRED TANK TYPE WATER HEATER SCHEDULE

TAG	LOCATION	GAS TYPE	DOMESTIC WATER VOLUME (GAL)	CAPACITY (MBH)	MIN. THERMAL EFFICIENCY	E.W.T. (°F)	L.W.T. (°F)	V/PH	AMPS	BASIS OF DESIGN
WH-1	BOILER ROOM	NAT. GAS	75	76	97%	50	140	120/1	5	HTP PH76-80

NOTES:
1. PROVIDE CONDENSATE NEUTRALIZER, GRAVITY DRAIN TO FLOOR DRAIN.
2. PROVIDE 2" CPVC OR POLYPROPYLENE COMBUSTION AIR AND FLUE VENTING WITH CONCENTRIC SIDEWALL TERMINATION KIT.

PLUMBING FIXTURE SCHEDULE

TAG	DESCRIPTION	GPM	GPF	COLD WATER	HOT WATER	TEMPERED WATER	WASTE	BASIS OF DESIGN	DESCRIPTION/ACCESSORIES	NOTES
WC-1	WATER CLOSET - ADA	-	1.28	1"	-	-	4"	AMERICAN STANDARD 2856.128	VITREOUS CHINA, WALL MOUNT, ADA WATER CLOSET WITH MANUAL FLUSH VALVE. PROVIDE SINGLE MOUNT, HORIZONTAL OUTLET, WALL CARRIER, ZURN Z1201-N. PROVIDE HEAVY DUTY, OPEN FRONT SEAT WITH EVERCLEAN SURFACE, AMERICAN STANDARD 5901.110T.	1
WC-2	WATER CLOSET	-	1.28	1"	-	-	4"	AMERICAN STANDARD 2856.128	VITREOUS CHINA, WALL MOUNT, WATER CLOSET WITH MANUAL FLUSH VALVE. PROVIDE SINGLE MOUNT, HORIZONTAL OUTLET, WALL CARRIER, ZURN Z1201-N, PROVIDE HEAVY DUTY, OPEN FRONT SEAT WITH EVERCLEAN SURFACE, AMERICAN STANDARD 5901.110T.	
U-1	URINAL - ADA	-	0.5	¾"	-	-	2"	AMERICAN STANDARD 6590.501	VITREOUS CHINA, WALL MOUNT, ADA URINAL WITH MANUAL FLUSH VALVE WITH WALL HANGERS.	1
U-2	URINAL	-	0.5	¾"	-	-	2"	AMERICAN STANDARD 6590.501	VITREOUS CHINA, WALL MOUNT, URINAL WITH MANUAL FLUSH VALVE WITH WALL HANGERS.	
L-1	LAVATORY SINK - ADA	0.5	-	½"	½"	-	1 ½"	AMERICAN STANDARD 0356.028	VITREOUS CHINA, WALL HUNG, ADA LAVATORY WITH FRONT OVERFLOW AND INTEGRAL BACKSPLASH. PROVIDE WALL HANGER. PROVIDE ADA, TWO HANDLE CENTERSET FAUCET WITH VANDAL RESISTANT WRIST BLADES AT 4" O.C. AND GRID STRAINER DRAIN, AMERICAN STANDARD 5502.175.	1
L-2	LAVATORY SINK	0.5	-	½"	½"	-	1 ½"	AMERICAN STANDARD 0356.028	VITREOUS CHINA, WALL HUNG, LAVATORY WITH FRONT OVERFLOW AND INTEGRAL BACKSPLASH. PROVIDE WALL HANGER. PROVIDE TWO HANDLE CENTERSET FAUCET WITH VANDAL RESISTANT WRIST BLADES AT 4" O.C. AND GRID STRAINER DRAIN, AMERICAN STANDARD 5502.175.	
SH-1	SHOWER ENCLOSURE AND TRIM - ADA	1.5	-	½"	½"	-	2"	FLORESTONE 40-40H	ONE PIECE, GEL-COATED, FIBERGLASS, 40½" W x 40½" D x 80" H, ADA SHOWER STALL. PROVIDE STAINLESS STEEL CURTAIN ROD, STAINLESS STEEL GRAB BARS, STAINLESS STEEL RECESSED SOAP DISH, AND FOLDING WHEELCHAIR TRANSFER SEAT BY ENCLOSURE MANUFACTURER. PROVIDE SHOWER TRIM KIT INCLUDING HAND HELD SHOWER HEAD, FLEXIBLE HOSE, 36" GRAB BAR/SLIDE BAR, MOEN 52236GBM15. PROVIDE PRESSURE BALANCING VALVE WITH INTEGRATED VOLUME CONTROLS, SYMMONS S-9600-PLR. PROVIDE GRID STRAINER DRAIN.	1
KS-1	COUNTERTOP SINK - ADA	1.5	-	½"	½"	-	1 ½"	ELKAY LRAD202245	TOP MOUNT, 18 GAUGE STAINLESS STEEL, SINGLE BOWL, 19½" W x 22" D x 4½"H , ADA KITCHEN SINK. PROVIDE GOOSENECK FAUCET WITH PULL DOWN SPRAY, SINGLE LEVER, SINGLE HOLE FAUCET, ELKAY LK6000. PROVIDE BASKET STRAINER AND TAILPIECE DRAIN, ELKAY LK99.	1
DF-1	WATER COOLER AND BOTTLE FILLER - ADA	8.0 GPH	-	½"	-	-	1 ½"	ELKAY LZSTL8WSLK	WALL MOUNT, DUAL HEIGHT STATION WATER COOLER AND BOTTLE FILLER WITH FILTER. 115V/1PH/60HZ, MOCP 20A.	1
MS-1	MOP SERVICE SINK	2.5	-	½"	½"	-	3"	FIAT TSBC1610	FLOOR MOUNT, 24"W x 24"D x 12" H, TERRAZO MOP SINK WITH STAINLESS STEEL CAPS ON THRESHOLD AND AN INTEGRAL STAINLESS STEEL STRAINER DRAIN. PROVIDE WALL MOUNT SERVICE SINK FAUCET WITH INTEGRAL VACUUM BREAKER, STOPS, ADJUSTABLE WALL BRACE, AND THREADED HOSE SPOUT, FIAT 830-AA. PROVIDE HOSE AND HOSE BRACKET, FIAT 832-AA.	
SS-1	SERVICE SINK	2.5	-	½"	½"	-	3"	AMERICAN STANDARD 7695.008	WALL MOUNT, 24"W x 20"D x 12" H, ENAMELED CAST IRON SERVICE SINK. PROVIDE BACKSPLASH MOUNT SERVICE SINK FAUCET WITH INTEGRAL VACUUM BREAKER, STOPS, AND THREADED HOSE SPOUT, AMERICAN STANDARD 8351.076. PROVIDE 3" CAST IRON P-TRAP WITH CLEANOUT, AMERICAN STANDARD 7798.030. PROVIDE WALL SUPPORTS.	
ESH-1	COMBINATION EMERGENCY EYEWASH AND DRENCH SHOWER	20	-	-	-	1¼"	-	HAWS 8300-8309	GALAVNIZED STEEL PEDESTAL COMBINATION EMERGENCY EYEWASH AND DRENCH SHOWER WITH STAINLESS STEEL RECEPTOR AND SHOWER HEAD. PROVIDE STAINLESS STEEL DUSTCOVER FOR EYEWASH, HAWS 9102.	
FD-1	GENERAL DUTY	-	-	-	-	-	4"	ZURN Z415B	CAST IRON BODY FLOOR DRAIN WITH POLISHED NICKEL BRONZE TOP. PROVIDE WATERLESS TRAP SEAL DEVICE, ZURN Z1072.	

NOTES:
1. INSTALL FIXTURE IN ACCORDANCE WITH 2010 ADA STANDARD, REFER TO ARCHITECTURAL DRAWINGS FOR DIMENSIONS.

GENERAL NOTES:

1. ALL PLUMBING WORK SHALL BE PERFORMED IN ACCORDANCE WITH THE PLUMBING CODE OF NEW YORK STATE 2015.
2. FIELD COORDINATE ALL PIPE RUNS BEFORE FABRICATION AND INSTALLATION. NO EXTRAS SHALL BE PERMITTED FOR REROUTING, REFABRICATION, RESTOCKING OR REMOVAL OF INSTALLED WORK DUE TO COORDINATION WITH BUILDING STRUCTURE, WORK OF OTHER TRADES OR EXISTING BUILDING COMPONENTS. DRAWINGS ARE SCHEMATIC AND, PIPING RUNS DO NOT SHOW ALL NECESSARY CHANGES IN ELEVATION OR OFFSETS REQUIRED FOR A COMPLETE INSTALLATION. PROVIDE ALL PIPE OFFSETS AS REQUIRED FOR THE INSTALLATION OF THE PIPING SHOWN ON PLANS.
3. THE BUILDING HAS A SEISMIC DESIGN CATEGORY OF A, IS SITE CLASS B, AND HAS AN IMPORTANCE FACTOR OF 1.0. REFER TO DRAWING S-001 FOR SPECIFIC SEISMIC LOADS. PROVIDE SEISMIC BRACING / SUPPORTS AS REQUIRED BY ASCE 7 FOR ALL PIPING AND EQUIPMENT.
4. LOCATE OVERHEAD PIPING AS HIGH AS POSSIBLE.

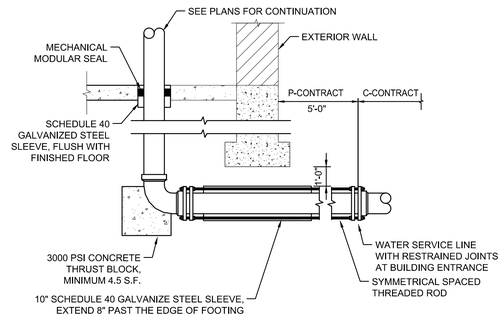

2 P-001 Water Service Detail
SCALE: N.T.S.

ABBREVIATIONS:

AFF	ABOVE FINISH FLOOR
BFP	BACK FLOW PREVENTER
CO	CLEAN OUT
CODP	CLEAN OUT DECK PLATE
CW	COLD WATER
DCV	DOUBLE CHECK VALVE
DN	DOWN
EWC	ELECTRIC WATER COOLER
FD	FLOOR DRAIN
HB	HOSE BIBB
HC	HVAC CONTRACT
HW	HOT WATER
HWR	HOT WATER RETURN
I.E.	INVERT ELEVATION
LAV	LAVATORY
MC	HVAC CONTRACTOR
NFWH	NON-FREEZE WALL HYDRANT
NTS	NOT TO SCALE
OW	OIL-LADEN WASTE
PDI	PLUMBING DRAINAGE INSTITUTE
SA	SHOCK ARRESTER
S	SINK
THW	TEMPERED HOT WATER
TMV	THERMOSTATIC MIXING VALVE
TYP	TYPICAL
U	URINAL
V	VENT
VTR	VENT THRU ROOF
W	WASTE
WC	WATER CLOSET
WH	WATER HEATER
WCO	WALL CLEANOUT

PLUMBING SYMBOLS:

W	SANITARY DRAINAGE - ABOVE GRADE
W	SANITARY DRAINAGE - BELOW GRADE
OW	SANITARY DRAINAGE - OIL LADEN
V	VENT PIPING
	COLD WATER
	HOT WATER
	HOT WATER RETURN
CA	COMPRESSED AIR
GAS	LOW PRESSURE NATURAL GAS (0.5 PSIG)
WPCO	CLEAN OUT WALL PLATE
CO	CLEAN OUT
CODP	CLEAN OUT DECKPLATE
	HOSE BIBB OR WALL HYDRANT
	FLOOR DRAIN
	UNION
	SHUT-OFF VALVE-BALL TYPE
	CHECK VALVE
	RELIEF VALVE
	STRAINER
	PRESSURE GAUGE
	THERMOMETER
	TRAP
	ELBOW - UP
	ELBOW - DN
	TEE
	BRANCH OFF TOP
	BRANCH OFF BOTTOM
	PRESSURE REDUCING VALVE
	BALANCE VALVE
	CIRCULATION PUMP
P	PRESSURE SENSOR

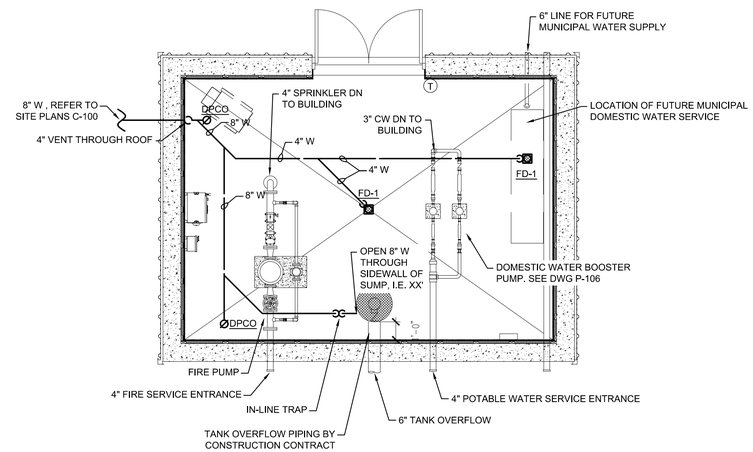

1 P-001 Pump House Plan
SCALE: 1/4"=1'-0"

N

IECC C103.2.2 (NYS 2016 SUPPLEMENT):
TO THE BEST OF MY KNOWLEDGE, BELIEF, AND PROFESSIONAL JUDGEMENT, THE PLANS AND SPECIFICATIONS ARE IN COMPLIANCE WITH THE 2015 IECC COMMERCIAL PROVISIONS (AS AMENDED BY THE NYS 2016 SUPPLEMENT).

APPLICABLE CODES:

- INTERNATIONAL BUILDING CODE 2015 AS REFERENCED IN THE 2017 UNIFORM CODE SUPPLEMENT
- INTERNATIONAL ENERGY CONSERVATION CODE 2015 IN CONJUNCTION WITH THE 2016 SUPPLEMENT TO THE NEW YORK STATE ENERGY CONSERVATION CODE
- INTERNATIONAL PLUMBING CODE 2015 AS REFERENCED IN THE 2017 UNIFORM CODE SUPPLEMENT
- INTERNATIONAL FUEL GAS CODE 2015 AS REFERENCED IN THE 2017 UNIFORM CODE SUPPLEMENT
- ADA: ICC/ANSI A117.1 (STANDARD ON ACCESSIBLE AND USABLE BUILDINGS AND FACILITIES), AS REFERENCED IN THE CODES ABOVE.

36x24 PLOT SHEET

NEW YORK STATE OF OPPORTUNITY. Office of General Services
DESIGN & CONSTRUCTION

CONSULTANT:
LaBella Powered by partnership.

MH PROFESSIONAL ENGINEERING, PLLC

WARNING:
THE ALTERATION OF THIS MATERIAL IN ANY WAY, UNLESS DONE UNDER THE DIRECTION OF A COMPARABLE PROFESSIONAL, I.E. ARCHITECT FOR AN ARCHITECT, ENGINEER FOR AN ENGINEER OR LANDSCAPE ARCHITECT FOR A LANDSCAPE ARCHITECT, IS A VIOLATION OF THE NEW YORK STATE EDUCATION LAW AND/OR REGULATIONS AND IS A CLASS 'A' MISDEMEANOR.

PROFESSIONAL ENGINEER MICHELLE M. HOUGHTALING 072116 STATE OF NEW YORK

CONTRACT:
PLUMBING

TITLE:
PROVIDE SUB-HEADQUARTERS BUILDING

LOCATION:
DOT REGION 8, DUTCHESS COUNTY
205 LIME KILN RD.
EAST FISHKILL, NEW YORK 12533

CLIENT:
NEW YORK STATE DEPARTMENT OF TRANSPORTATION

MARK	DATE	DESCRIPTION
	10/17/2019	BID DOCUMENTS

PROJECT NUMBER:	45552-P
DESIGNED BY:	RS
DRAWN BY:	JM
FIELD CHECK:	
APPROVED:	MH

SHEET TITLE:
SYMBOLS, NOTES, & ABBREVIATIONS

DRAWING NUMBER:
P-001

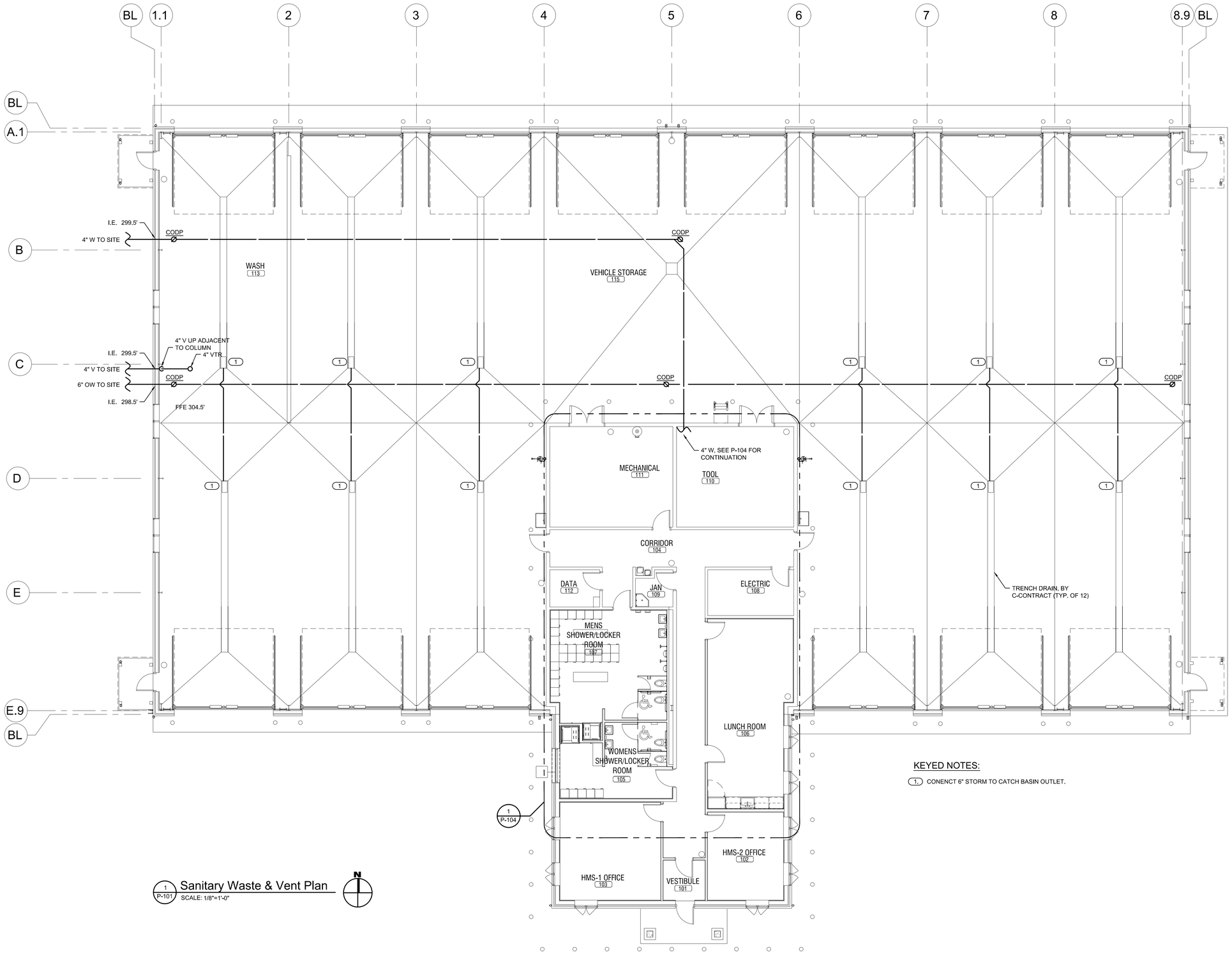

1 P-101 Sanitary Waste & Vent Plan
SCALE: 1/8"=1'-0"

KEYED NOTES:

1. CONENCT 6" STORM TO CATCH BASIN OUTLET.

36x24 PLOT SHEET

NEW YORK STATE OF OPPORTUNITY. Office of General Services

DESIGN & CONSTRUCTION

CONSULTANT:

LaBella Powered by partnership.

MH PROFESSIONAL ENGINEERING, PLLC

WARNING:

THE ALTERATION OF THIS MATERIAL IN ANY WAY, UNLESS DONE UNDER THE DIRECTION OF A COMPARABLE PROFESSIONAL, I.E. ARCHITECT FOR AN ARCHITECT, ENGINEER FOR AN ENGINEER OR LANDSCAPE ARCHITECT FOR A LANDSCAPE ARCHITECT, IS A VIOLATION OF THE NEW YORK STATE EDUCATION LAW AND/OR REGULATIONS AND IS A CLASS 'A' MISDEMEANOR.

PROFESSIONAL ENGINEER MICHELLE M. HOUGHTALING 072116 STATE OF NEW YORK

CONTRACT: PLUMBING

TITLE: PROVIDE SUB-HEADQUARTERS BUILDING

LOCATION: DOT REGION 8, DUTCHESS COUNTY
205 LIME KILN RD.
EAST FISHKILL, NEW YORK 12533

CLIENT: NEW YORK STATE DEPARTMENT OF TRANSPORTATION

MARK	DATE	DESCRIPTION
	10/17/2019	BID DOCUMENTS

PROJECT NUMBER:	45552-P
DESIGNED BY:	RS
DRAWN BY:	JM
FIELD CHECK:	
APPROVED:	MH

SHEET TITLE: SANITARY WASTE & VENT PLAN

DRAWING NUMBER: P-101

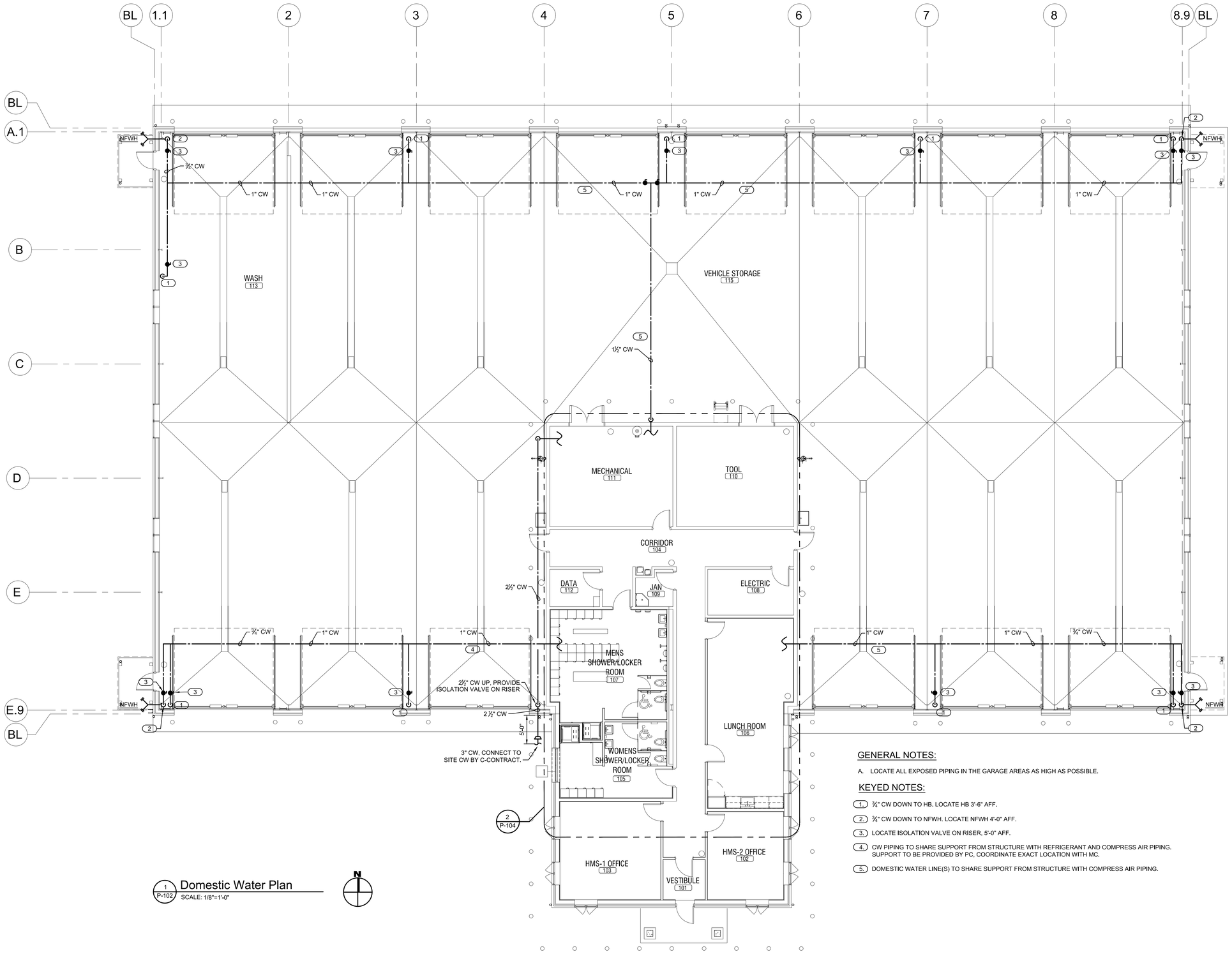

1 P-102 Domestic Water Plan

SCALE: 1/8"=1'-0"

N

GENERAL NOTES:

A. LOCATE ALL EXPOSED PIPING IN THE GARAGE AREAS AS HIGH AS POSSIBLE.

KEYED NOTES:

1. ¾" CW DOWN TO HB. LOCATE HB 3'-6" AFF.
2. ¾" CW DOWN TO NFWH. LOCATE NFWH 4'-0" AFF.
3. LOCATE ISOLATION VALVE ON RISER, 5'-0" AFF.
4. CW PIPING TO SHARE SUPPORT FROM STRUCTURE WITH REFRIGERANT AND COMPRESS AIR PIPING. SUPPORT TO BE PROVIDED BY PC, COORDINATE EXACT LOCATION WITH MC.
5. DOMESTIC WATER LINE(S) TO SHARE SUPPORT FROM STRUCTURE WITH COMPRESS AIR PIPING.

36x24 PLOT SHEET

NEW YORK STATE OF OPPORTUNITY. Office of General Services

DESIGN & CONSTRUCTION

CONSULTANT:

LaBella Powered by partnership.

MH PROFESSIONAL ENGINEERING, PLLC

WARNING:

THE ALTERATION OF THIS MATERIAL IN ANY WAY, UNLESS DONE UNDER THE DIRECTION OF A COMPARABLE PROFESSIONAL, I.E. ARCHITECT FOR AN ARCHITECT, ENGINEER FOR AN ENGINEER OR LANDSCAPE ARCHITECT FOR A LANDSCAPE ARCHITECT, IS A VIOLATION OF THE NEW YORK STATE EDUCATION LAW AND/OR REGULATIONS AND IS A CLASS 'A' MISDEMEANOR.

PROFESSIONAL ENGINEER MICHELLE M. HOUGHTALING 072116 STATE OF NEW YORK

CONTRACT: PLUMBING

TITLE: PROVIDE SUB-HEADQUARTERS BUILDING

LOCATION: DOT REGION 8, DUTCHESS COUNTY
205 LIME KILN RD.
EAST FISHKILL, NEW YORK 12533

CLIENT: NEW YORK STATE DEPARTMENT OF TRANSPORTATION

MARK	DATE	DESCRIPTION
	10/17/2019	BID DOCUMENTS

PROJECT NUMBER:	45552-P
DESIGNED BY:	RS
DRAWN BY:	JM
FIELD CHECK:	
APPROVED:	MH

SHEET TITLE: DOMESTIC WATER PLAN

DRAWING NUMBER: P-102

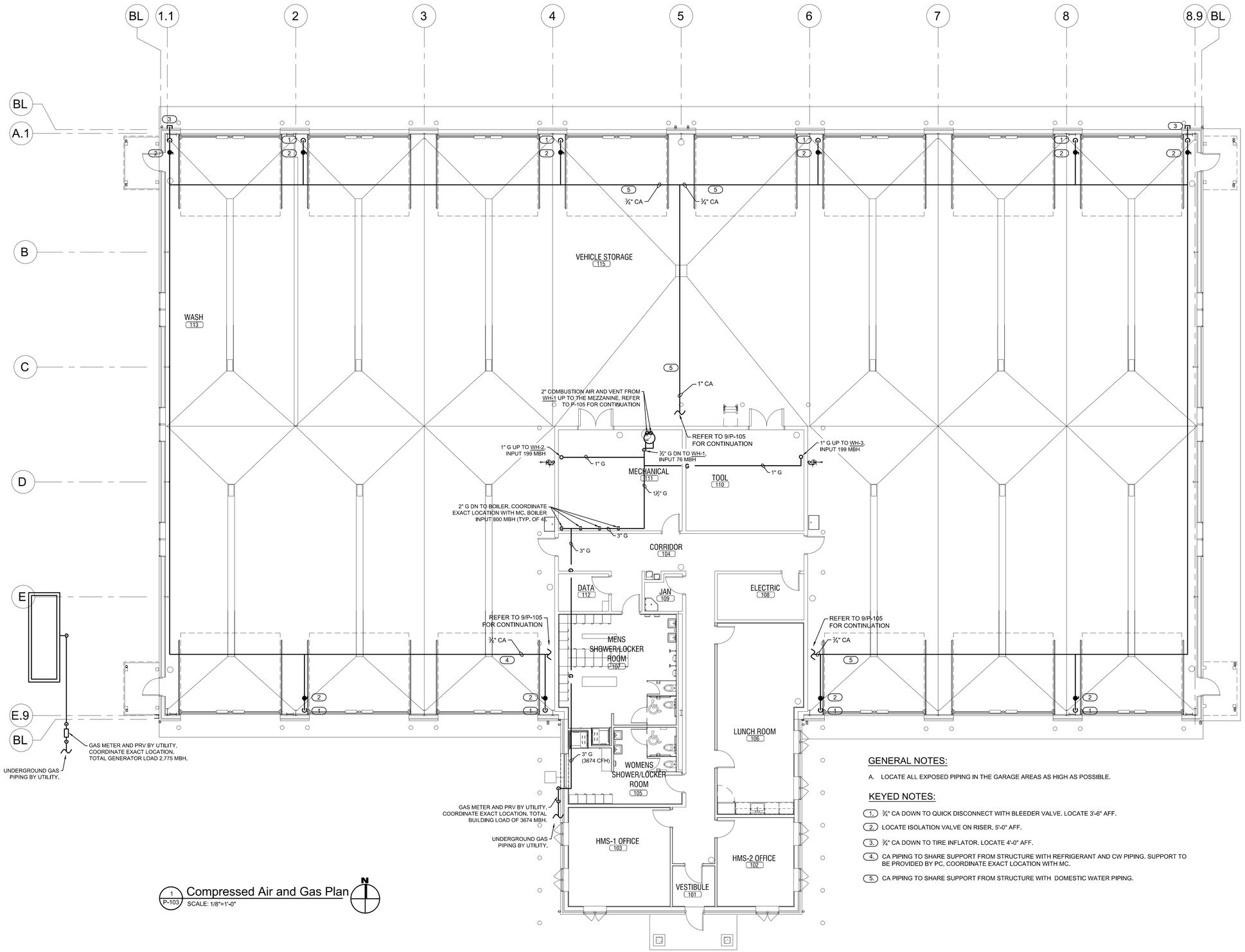

1 P-103 Compressed Air and Gas Plan
SCALE: 1/8"=1'-0"

GENERAL NOTES:

A. LOCATE ALL EXPOSED PIPING IN THE GARAGE AREAS AS HIGH AS POSSIBLE.

KEYED NOTES:

1. ¾" CA DOWN TO QUICK DISCONNECT WITH BLEEDER VALVE. LOCATE 3'-6" AFF.
2. LOCATE ISOLATION VALVE ON RISER, 5'-0" AFF.
3. ¾" CA DOWN TO TIRE INFLATOR. LOCATE 4'-0" AFF.
4. CA PIPING TO SHARE SUPPORT FROM STRUCTURE WITH REFRIGERANT AND CW PIPING. SUPPORT TO BE PROVIDED BY PC, COORDINATE EXACT LOCATION WITH MC.
5. CA PIPING TO SHARE SUPPORT FROM STRUCTURE WITH DOMESTIC WATER PIPING.

36x24 PLOT SHEET

NEW YORK STATE OF OPPORTUNITY. Office of General Services
DESIGN & CONSTRUCTION

CONSULTANT:

LaBella Powered by partnership.

MH PROFESSIONAL ENGINEERING, PLLC

WARNING:
THE ALTERATION OF THIS MATERIAL IN ANY WAY, UNLESS DONE UNDER THE DIRECTION OF A COMPARABLE PROFESSIONAL, I.E. ARCHITECT FOR AN ARCHITECT, ENGINEER FOR AN ENGINEER OR LANDSCAPE ARCHITECT FOR A LANDSCAPE ARCHITECT, IS A VIOLATION OF THE NEW YORK STATE EDUCATION LAW AND/OR REGULATIONS AND IS A CLASS 'A' MISDEMEANOR.

PROFESSIONAL ENGINEER MICHELLE M. HOUGHTALING 072116 STATE OF NEW YORK

CONTRACT:
PLUMBING

TITLE:
PROVIDE SUB-HEADQUARTERS BUILDING

LOCATION:
DOT REGION 8, DUTCHESS COUNTY
205 LIME KILN RD.
EAST FISHKILL, NEW YORK 12533

CLIENT:
NEW YORK STATE DEPARTMENT OF TRANSPORTATION

MARK	DATE	DESCRIPTION
	10/17/2019	BID DOCUMENTS

PROJECT NUMBER:	45552-P
DESIGNED BY:	RS
DRAWN BY:	JM
FIELD CHECK:	
APPROVED:	MH

SHEET TITLE:
COMPRESSED AIR & GAS PLAN

DRAWING NUMBER:
P-103

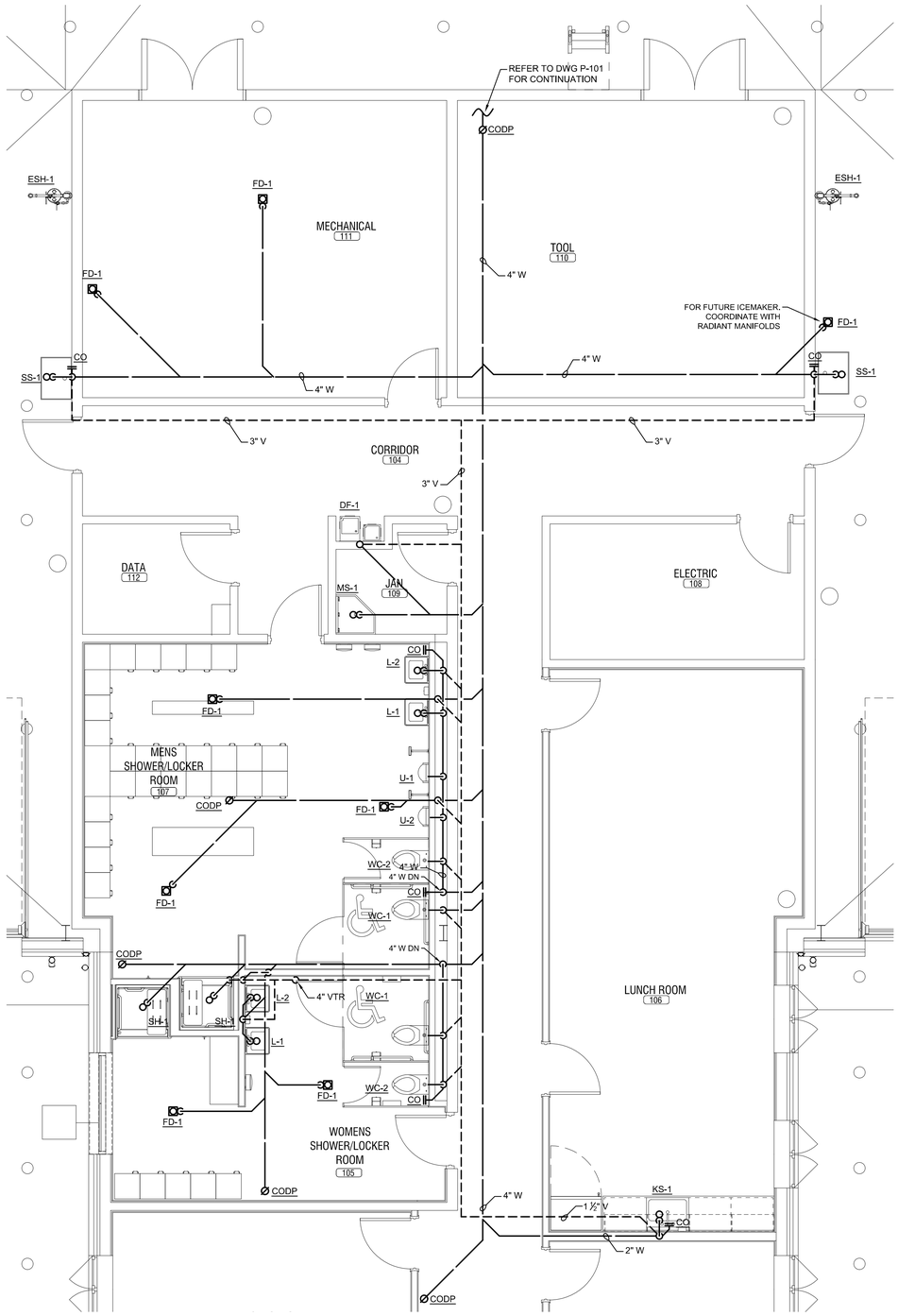

NOTES:
1. REFER TO PLUMBING FIXTURE SCHEDULE FOR ALL FIXTURE SANITARY BRANCH CONNECTION SIZES.
2. REFER TO DETAIL 10/P-105 FOR LAYOUT REFERENCE AND FOR ALL PIPE SIZES.

1 / P-104 Sanitary Waste & Vent Plan
SCALE: 1/4"=1'-0"

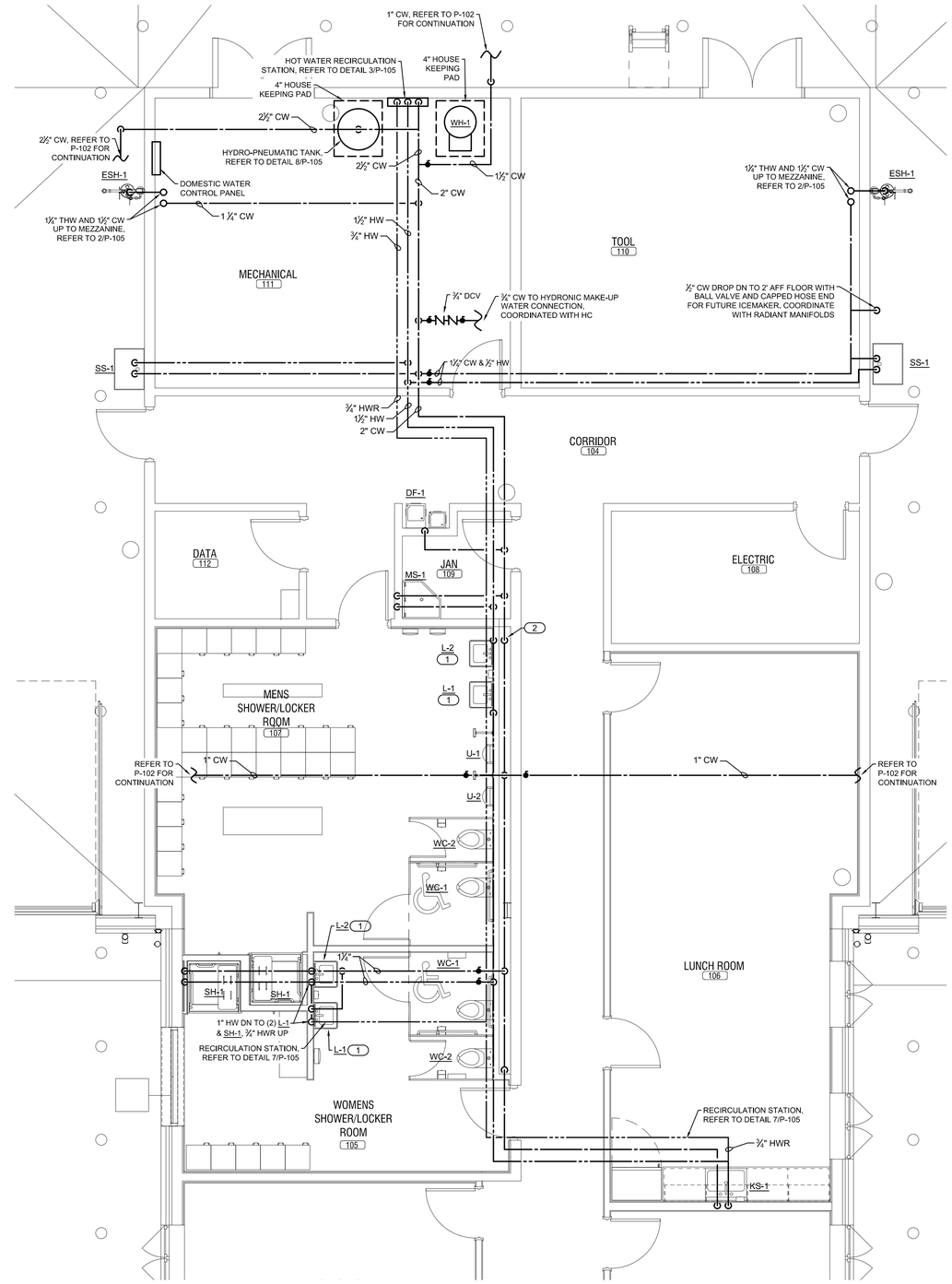

2 / P-104 Office Domestic Water Plan
SCALE: 1/4"=1'-0"

KEYED NOTES:
1. BRANCH LINE FROM HOT WATER MAIN LINE TO LAVATORY FAUCET SHALL BE LIMITED TO 2' TOTAL LENGTH.
2. HW & CW DN IN CHASE. REFER TO DETAIL 6/P-105 FOR SIZES AND SCHEMATIC.

36x24 PLOT SHEET

NEW YORK STATE OF OPPORTUNITY. Office of General Services
DESIGN & CONSTRUCTION

CONSULTANT:
LaBella Powered by partnership.
MH PROFESSIONAL ENGINEERING, PLLC

WARNING:
THE ALTERATION OF THIS MATERIAL IN ANY WAY, UNLESS DONE UNDER THE DIRECTION OF A COMPARABLE PROFESSIONAL, I.E. ARCHITECT FOR AN ARCHITECT, ENGINEER FOR AN ENGINEER OR LANDSCAPE ARCHITECT FOR A LANDSCAPE ARCHITECT, IS A VIOLATION OF THE NEW YORK STATE EDUCATION LAW AND/OR REGULATIONS AND IS A CLASS 'A' MISDEMEANOR.

PROFESSIONAL ENGINEER MICHELLE M. HOUGHTALING 072116 STATE OF NEW YORK

CONTRACT: PLUMBING
TITLE: PROVIDE SUB-HEADQUARTERS BUILDING
LOCATION: DOT REGION 8, DUTCHESS COUNTY 205 LIME KILN RD. EAST FISHKILL, NEW YORK 12533
CLIENT: NEW YORK STATE DEPARTMENT OF TRANSPORTATION

MARK	DATE	DESCRIPTION
	10/17/2019	BID DOCUMENTS

PROJECT NUMBER:	45552-P
DESIGNED BY:	RS
DRAWN BY:	JM
FIELD CHECK:	
APPROVED:	MH

SHEET TITLE: PLUMBING ENLARGED PLANS

DRAWING NUMBER: P-104

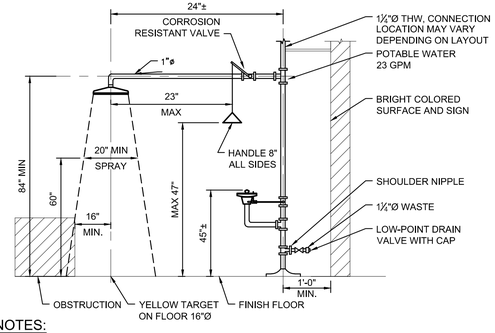

NOTES:
1. NORMAL MAX 69" W/MAX 54" HANDLE HEIGHT FOR HANDICAP ACCESSIBILITY
2. PROVIDE EMERGENCY SHOWERS NO MORE THAN 100' FROM ANY POINT OF HAZARD
3. ALL ELECTRICAL OUTLETS 18" MIN FROM OUTER EDGE OF SHOWER SPRAY CONE

1 P-105 Emergency Eyewash and Drench Shower
SCALE: 1/8"=1'-0"

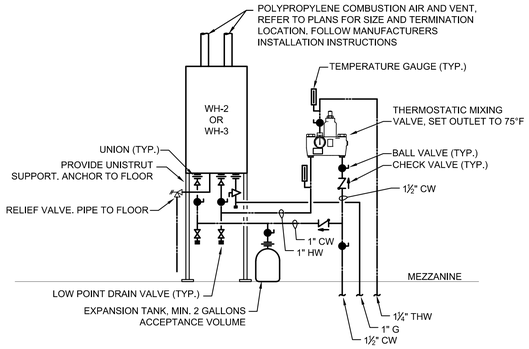

2 P-105 Water Heater (WH-2 & WH-3) Schematic
SCALE: NTS

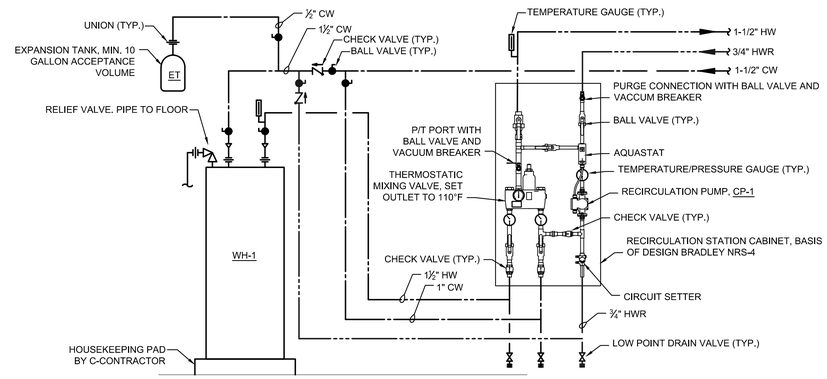

3 P-105 WH-1 Water Heater Schematic
SCALE: 1/8"=1'-0"

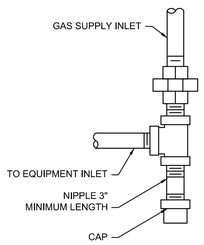

4 P-105 Typical Natural Gas Drip Leg
SCALE: NTS

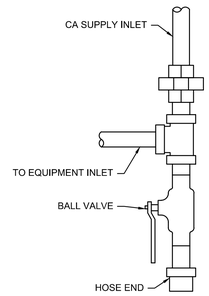

5 P-105 Typical Compressed Air Drip Leg
SCALE: NTS

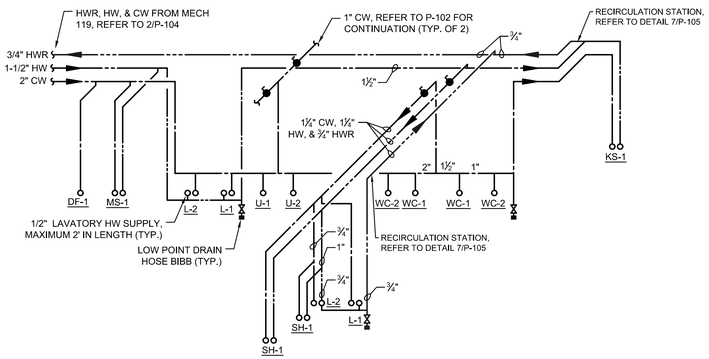

6 P-105 Domestic Water Diagram
SCALE: N.T.S.

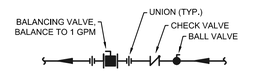

7 P-105 Recirculation Station Diagram
SCALE: N.T.S.

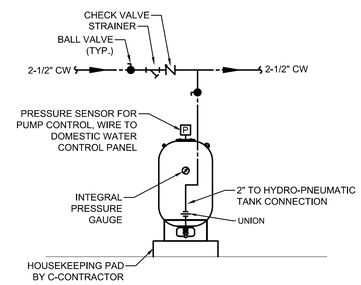

8 P-105 Hydro-Pneumatic Tank Detail
SCALE: N.T.S.

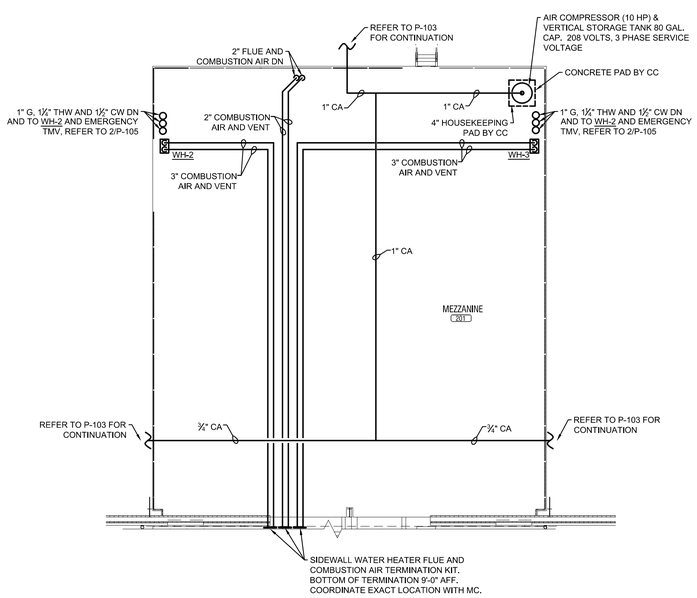

9 P-201 Mezzanine Plan
SCALE: 1/8"=1'-0"

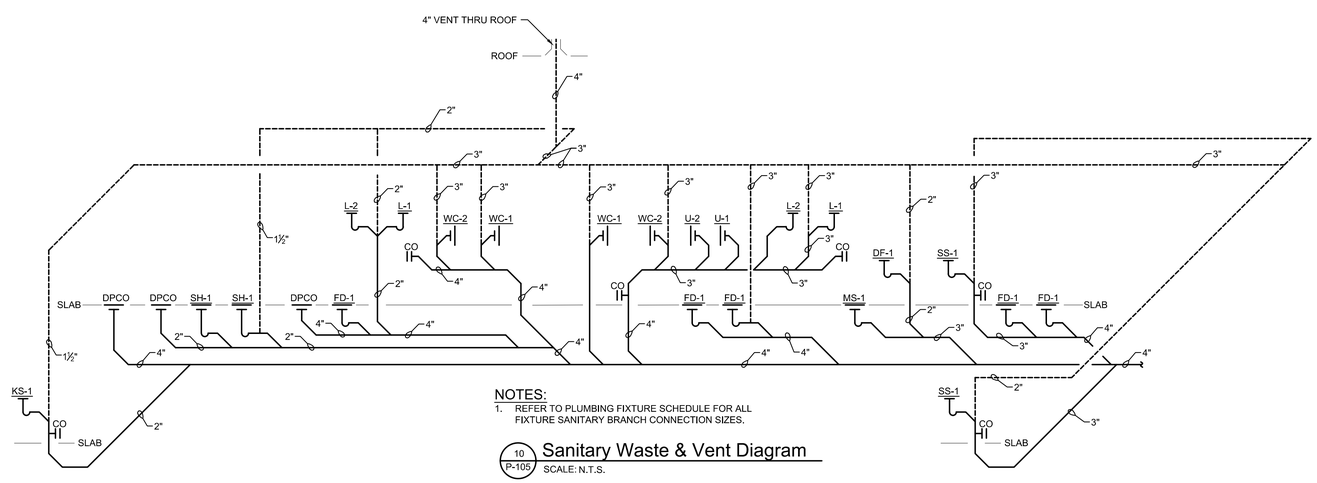

NOTES:
1. REFER TO PLUMBING FIXTURE SCHEDULE FOR ALL FIXTURE SANITARY BRANCH CONNECTION SIZES.

10 P-105 Sanitary Waste & Vent Diagram
SCALE: N.T.S.

36x24 PLOT SHEET

NEW YORK STATE OF OPPORTUNITY. Office of General Services
DESIGN & CONSTRUCTION

CONSULTANT:
LaBella Powered by partnership.
MH PROFESSIONAL ENGINEERING, PLLC

WARNING:
THE ALTERATION OF THIS MATERIAL IN ANY WAY, UNLESS DONE UNDER THE DIRECTION OF A COMPARABLE PROFESSIONAL, I.E. ARCHITECT FOR AN ARCHITECT, ENGINEER FOR AN ENGINEER OR LANDSCAPE ARCHITECT FOR A LANDSCAPE ARCHITECT, IS A VIOLATION OF THE NEW YORK STATE EDUCATION LAW AND/OR REGULATIONS AND IS A CLASS 'A' MISDEMEANOR.

PROFESSIONAL ENGINEER MICHELLE M. HOUGHTALING 072116 STATE OF NEW YORK

CONTRACT: PLUMBING

TITLE: PROVIDE SUB-HEADQUARTERS BUILDING

LOCATION: DOT REGION 8, DUTCHESS COUNTY 205 LIME KILN RD. EAST FISHKILL, NEW YORK 12533

CLIENT: NEW YORK STATE DEPARTMENT OF TRANSPORTATION

MARK	DATE	DESCRIPTION
	10/17/2019	BID DOCUMENTS

PROJECT NUMBER: 45552-P
DESIGNED BY: RS
DRAWN BY: JM
FIELD CHECK:
APPROVED: MH

SHEET TITLE: MEZZANINE PLAN AND DETAILS

DRAWING NUMBER: P-105

PUMP SCHEDULE									
UNIT	TYPE	LOCATION	SYSTEM APPLICATION	CAPACITY (GPM)	HEAD (FT)	HP	VOLTS	PHASE	BASIS OF DESIGN
DP-1	IN-LINE	PUMPHOUSE	DOMESTIC WATER BOOSTING	30	165	3.0	460	3	GOULDS 5SV
DP-2	IN-LINE	PUMPHOUSE	DOMESTIC WATER BOOSTING	30	165	3.0	460	3	GOULDS 5SV

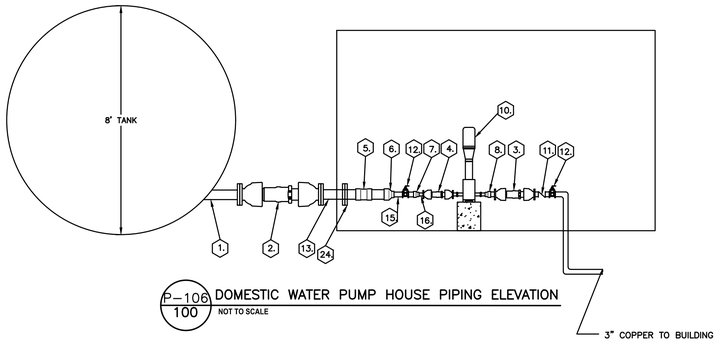

P-106 / 100 DOMESTIC WATER PUMP HOUSE PIPING ELEVATION
NOT TO SCALE

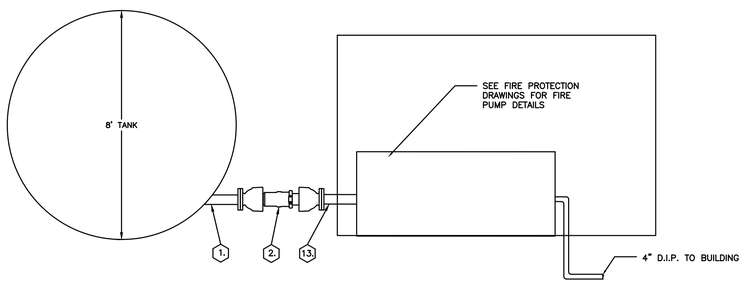

P-106 / 101 FIRE PROTECTION PUMP HOUSE PIPING ELEVATION
NOT TO SCALE

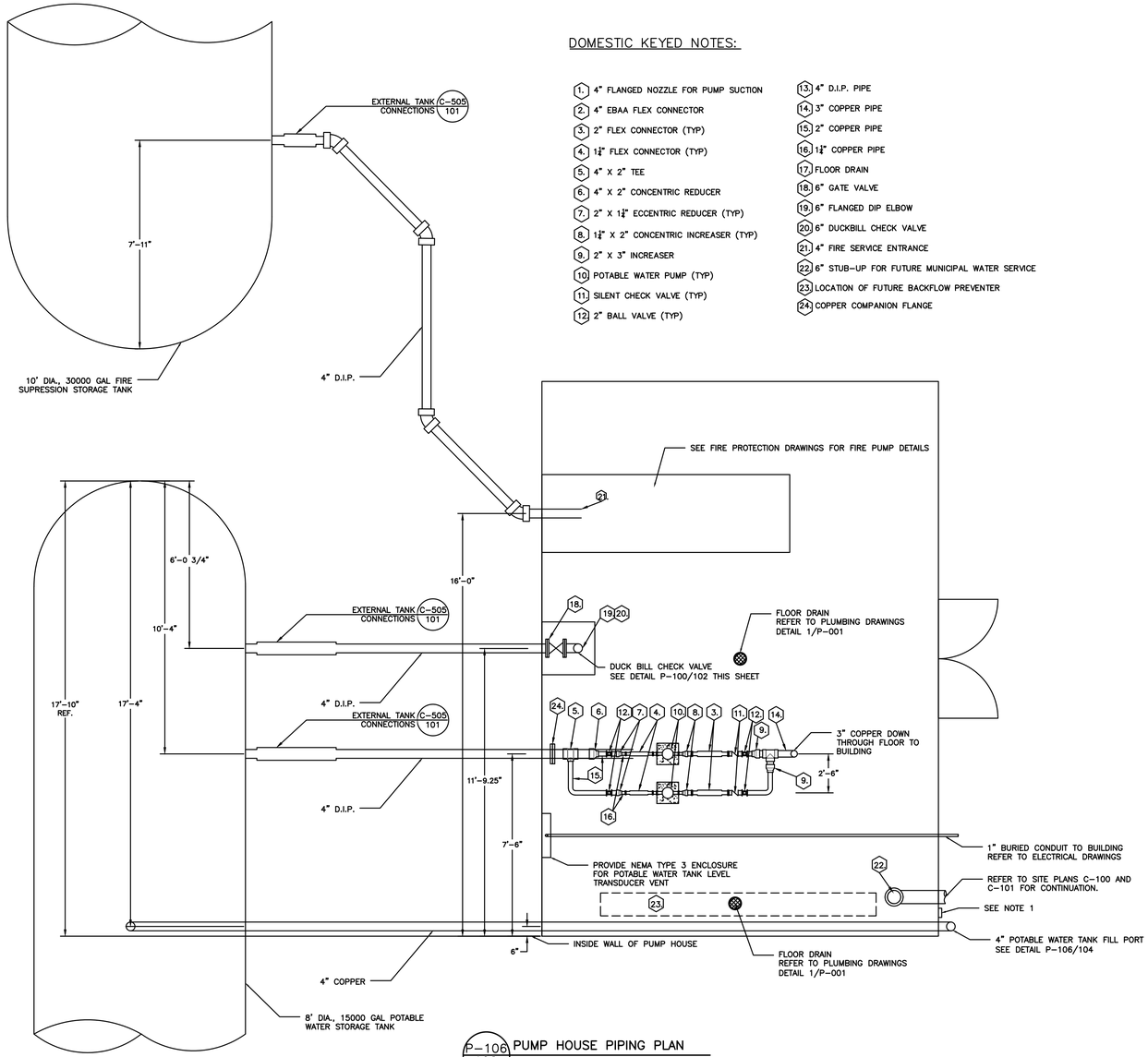

P-106 / 102 PUMP HOUSE PIPING PLAN
NOT TO SCALE

1. PROVIDE PVC SIGN WITH 2" DARK BLUE LETTERS ON WHITE BACKGROUND READING "POTABLE WATER ONLY" AND MOUNT TO BUILDING.
2. REFER TO DWG. C-303 FOR PIPE PROFILES AND ELEVATIONS.

DOMESTIC KEYED NOTES:

1. 4" FLANGED NOZZLE FOR PUMP SUCTION
2. 4" EBAA FLEX CONNECTOR
3. 2" FLEX CONNECTOR (TYP)
4. 1¼" FLEX CONNECTOR (TYP)
5. 4" X 2" TEE
6. 4" X 2" CONCENTRIC REDUCER
7. 2" X 1¼" ECCENTRIC REDUCER (TYP)
8. 1¼" X 2" CONCENTRIC INCREASER (TYP)
9. 2" X 3" INCREASER
10. POTABLE WATER PUMP (TYP)
11. SILENT CHECK VALVE (TYP)
12. 2" BALL VALVE (TYP)
13. 4" D.I.P. PIPE
14. 3" COPPER PIPE
15. 2" COPPER PIPE
16. 1¼" COPPER PIPE
17. FLOOR DRAIN
18. 6" GATE VALVE
19. 6" FLANGED DIP ELBOW
20. 6" DUCKBILL CHECK VALVE
21. 4" FIRE SERVICE ENTRANCE
22. 6" STUB-UP FOR FUTURE MUNICIPAL WATER SERVICE
23. LOCATION OF FUTURE BACKFLOW PREVENTER
24. COPPER COMPANION FLANGE

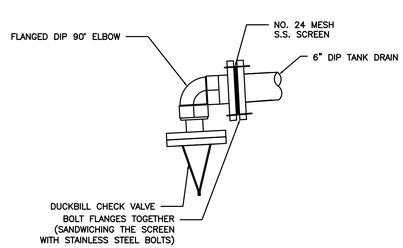

P-106 / 103 DUCKBILL CHECK VALVE DETAIL
NOT TO SCALE

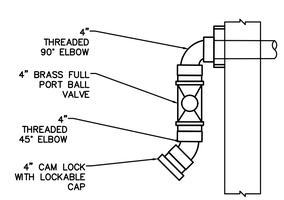

P-106 / 104 FILL PIPE END SECTION DETAIL
NOT TO SCALE

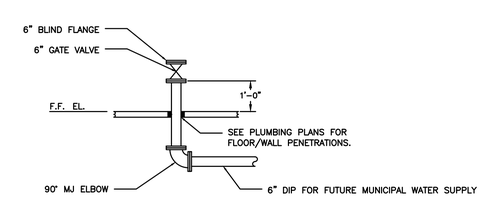

P-106 / 105 STUB UP FOR FUTURE MUNICIPAL WATER SUPPLY
NOT TO SCALE

NEW YORK STATE OF OPPORTUNITY. Office of General Services
DESIGN & CONSTRUCTION

CONSULTANT:
SHUMAKER Consulting Engineering & Land Surveying, D.P.C.

WARNING:
THE ALTERATION OF THIS MATERIAL IN ANY WAY, UNLESS DONE UNDER THE DIRECTION OF A COMPARABLE PROFESSIONAL, I.E. ARCHITECT FOR AN ARCHITECT, ENGINEER FOR AN ENGINEER OR LANDSCAPE ARCHITECT FOR A LANDSCAPE ARCHITECT, IS A VIOLATION OF THE NEW YORK STATE EDUCATION LAW AND/OR REGULATIONS AND IS A CLASS 'A' MISDEMEANOR.

STATE OF NEW YORK · JAMES M. CUMMINGS · 080958 · LICENSED PROFESSIONAL ENGINEER

CONTRACT:
PLUMBING

TITLE:
PROVIDE SUB-HEADQUARTERS BUILDING

LOCATION:
DOT REGION 8, DUTCHESS COUNTY
205 LIME KILN RD.
EAST FISHKILL,NEW YORK 12533

CLIENT:
NEW YORK STATE DEPARTMENT OF TRANSPORTATION

MARK	DATE	DESCRIPTION
	10/17/2019	BID DOCUMENTS

PROJECT NUMBER:	45552-P
DESIGNED BY:	EFN
DRAWN BY:	AWR
FIELD CHECK:	
APPROVED:	JMC

SHEET TITLE:
PUMP HOUSE POTABLE WATER PIPING AND DETAILS

DRAWING NUMBER:
P-106

36x24 PLOT SHEET

Mar 16,2020 – 1:12pm
E:\2017\17095--East Fishkill NYSDOT Site\Design\PLANS\17095_C505-C506-C507_Water_Tank_and_Underground_Storage_Structure_Details.dwg

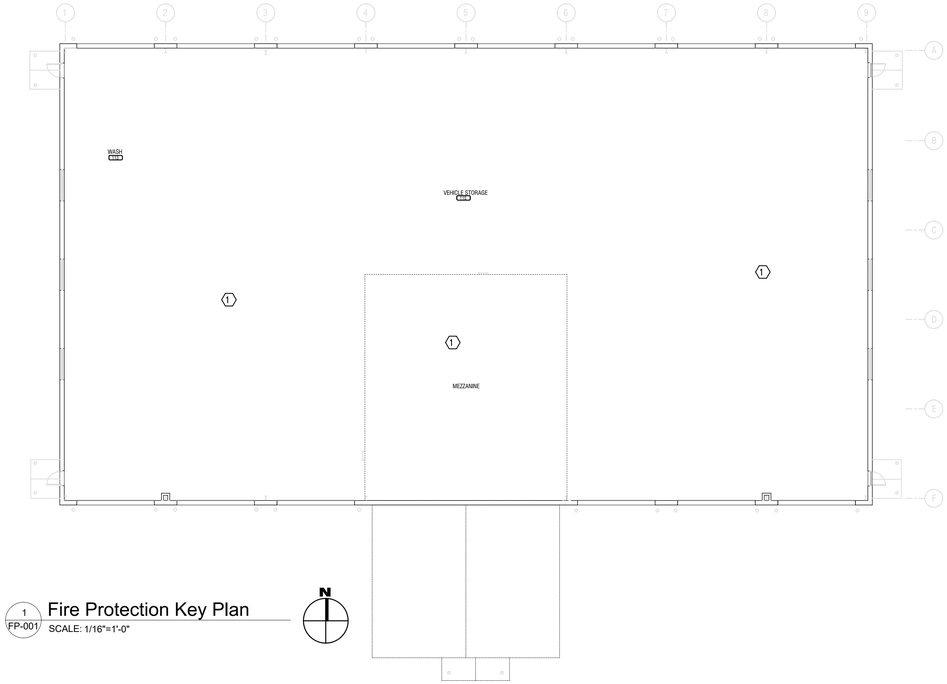

1 FP-001 Fire Protection Key Plan
SCALE: 1/16"=1'-0"

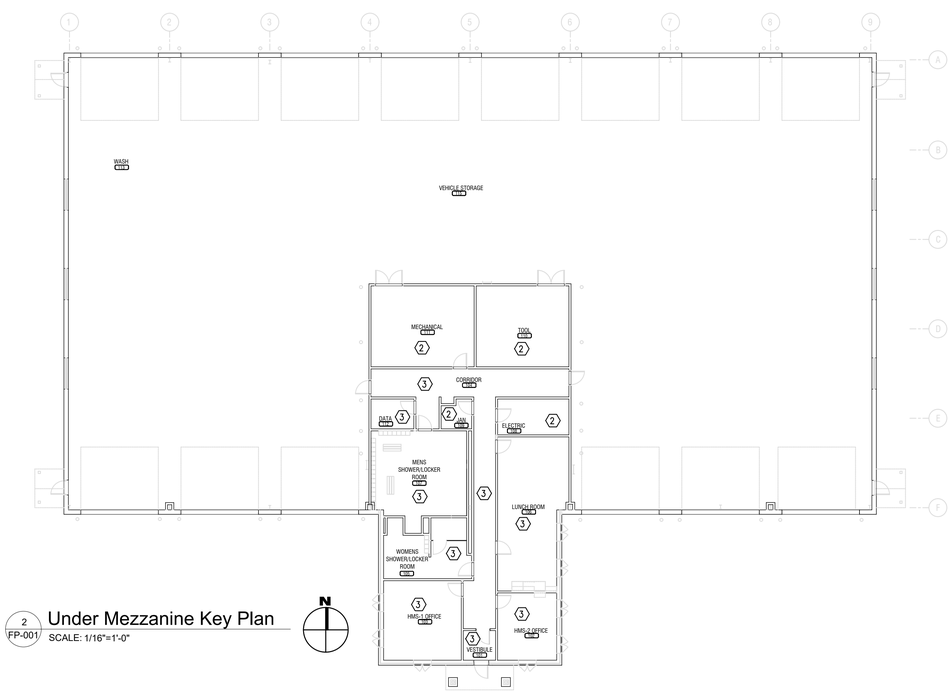

2 FP-001 Under Mezzanine Key Plan
SCALE: 1/16"=1'-0"

ABBREVIATIONS:

AFF	ABOVE FINISHED FLOOR
CIF	CIF
COUP	COUPLING
DI	DUCTILE IRON
DN	DOWN
DWG	DRAWING
FDC	FIRE DEPARTMENT CONNECTION
FFE	FINISHED FLOOR ELEVATION
FLG	FLANGE
FLEX	FLEXIBLE
FT	FEET
GALV	GALVANIZED
GRV	GROOVED
NTS	NOT TO SCALE
PEMB	PRE ENGINEERED METAL BUILDING
RN	RISER NIPPLE
RC	REDUCING COUPLING
TYP	TYPICAL

SYMBOLS:

	SPRINKLER PIPE		CHECK VALVE
	EXISTING SPRINKLER PIPE		PRESSURE REDUCING VALVE
	UNDERGOUND SUPPLY		UNION
	PIPE TURNING UP		FIRE DEPARTMENT CONNECTION
	PIPE TURNING DOWN		GROOVED CAP
	TEE TURNING UP		THREADED CAP
	TEE TURNING DOWN		GROOVED COUPLING
X	KEYED NOTE TAG		PIPE HANGER
	BALL VALVE	01 01	HYDRAULIC NODES

SPRINKLER SYSTEM DESIGN CRITERIA

KEY	HAZARD CLASSIFICATION	DENSITY (GPM/SQ. FT.)	REMOTE AREA (SQ. FT.)	MAX COVERAGE PER SPRINKLER (SQ. FT.)	REFERENCE
1	ORDINARY HAZARD GROUP 2	0.20	1500	130	NFPA 13 (2013)
2	ORDINARY HAZARD GROUP 1	0.15	1500	130	NFPA 13 (2013)
3	LIGHT HAZARD	0.10	1500	225	NFPA 13 (2013)

SPRINKLER SCHEDULE & LEGEND

SYMBOL	SPRINKLER DESCRIPTION	K-FACTOR	NPT	TEMPERATURE	FINISH
○	STANDARD RESPONSE UPRIGHT	K=8.0	¾"	155°	BRASS
⊗	STANDARD RESPONSE UPRIGHT	K=5.6	½"	155°	BRASS
◎	QUICK RESPONSE RECESSED PENDENT	K=5.6	½"	155°	CHROME
	QR HORIZONTAL SIDEWALL WITH HEAD GUARD	K=5.6	½"	155°	BRASS

PUMP SCHEDULE

UNIT #	TYPE	LOCATION	CAPACITY GPM	SPEED RPM	HEAD PSI	MOTOR HP	LOCATION		BASIS OF DESIGN
							VOLTS	PHASE	
FP-1	VERTICAL INLINE	PUMP HOUSE	250	3600	70	20	480	3	AC PUMP 3x3x7F
JP-1	VERTICAL INLINE	PUMP HOUSE	5	3500	87	3/4	208	3	AC PUMP 1SV-7 STG

GENERAL FIRE PROTECTION NOTES:

1. THE FIRE SPRINKLER SYSTEM DESIGN AND INSTALLATION SHALL CONFORM TO THE 2013 EDITION THE NATIONAL FIRE PROTECTION ASSOCIATION'S NFPA-13 STANDARD FOR THE INSTALLATION OF SPRINKLER SYSTEMS, NFPA-20 STANDARD FOR THE INSTALLATION OF STATIONARY PUMPS FOR FIRE PROTECTION, NFPA-22 STANDARD FOR WATER TANKS FOR PRIVATE FIRE PROTECTION, NFPA-24 STANDARD FOR THE INSTALLATION OF PRIVATE FIRE SERVICE MAINS AND THEIR APPURTENANCES AND APPLICABLE LOCAL, STATE AND NATIONAL CODES.
2. THE DESIGN DOCUMENTS IDENTIFY PERFORMANCE REQUIREMENTS AND DESIGN INTENT ONLY. HYDRAULICALLY DESIGN AND PROVIDE A COMPLETE CODE COMPLIANT SYSTEM.
3. FIELD COORDINATE ALL PIPE RUNS BEFORE FABRICATION AND INSTALLATION. NO EXTRAS SHALL BE PERMITTED FOR REROUTING, REFABRICATION, RESTOCKING OR REMOVAL OF INSTALLED WORK DUE TO COORDINATION WITH BUILDING STRUCTURE, WORK OF OTHER TRADES OR EXISTING BUILDING COMPONENTS. DRAWINGS ARE SCHEMATIC AND, PIPING RUNS DO NOT SHOW ALL NECESSARY CHANGES IN ELEVATION OR OFFSETS REQUIRED FOR A COMPLETE INSTALLATION. PROVIDE ALL PIPE OFFSETS AS REQUIRED FOR THE INSTALLATION OF THE PIPING SHOWN ON PLANS.
4. DEVELOP SHOP DRAWINGS AND HYDRAULIC CALCULATIONS PRIOR TO INSTALLATION OF WORK. OBTAIN APPROVAL OF SYSTEM FROM THE ENGINEER, THE LOCAL FIRE DEPARTMENT AND DIRECTOR'S REPRESENTATIVE. PROVIDE ANY CHANGES REQUIRED FOR APPROVAL AT NO ADDITIONAL COST TO THE STATE. ANY WORK INSTALLED PRIOR TO APPROVAL IS TO BE DONE AT THE CONTRACTORS RISK.
5. PROVIDE ALL MATERIALS AND EQUIPMENT REQUIRED FOR A COMPLETE SYSTEM. MATERIALS AND EQUIPMENT TO BE UL LISTED AND/OR FM APPROVED IN ACCORDANCE WITH NFPA-13.
6. ALL THREADED PIPING TO BE BLACK SCHEDULE 40 WITH THREADED DUCTILE IRON FITTINGS. ALL ROLL GROOVED PIPING TO BE BLACK SCHEDULE 40 WITH GROOVED FITTINGS. ALL PIPING PASSING THROUGH EXTERIOR WALLS TO BE GALVANIZED SCHEDULE 40 WITH GALVANIZED FITTINGS.
7. SPRINKLER PIPING SHALL NOT PASS DIRECTLY OVER ELECTRICAL PANELS OR EQUIPMENT. OVERHEAD PIPING TO BE INSTALLED AS HIGH AS POSSIBLE.
8. PIPING SHALL BE PITCHED BACK TO THE MAIN RISER WHERE POSSIBLE. PROVIDE AUXILIARY DRAINS ON TRAPPED SECTIONS OF PIPING PER NFPA-13.
9. COORDINATE FIRE DEPARTMENT CONNECTION SIZE AND THREAD TYPE WITH LOCAL FIRE DEPARTMENT.

FIRE PROTECTION NOTES:

1. ENTIRE BUILDING TO BE PROTECTED WITH AN AUTOMATIC WET PIPE SPRINKLER SYSTEM. ALL INTERIOR SPACES TO BE MAINTAINED ABOVE 40 DEGREES FAHRENHEIT AT ALL TIMES.
2. THE BUILDING HAS A SEISMIC DESIGN CATEGORY OF A, IS SITE CLASS B, AND HAS IMPORTANCE FACTOR OF 1.0. REFER TO DRAWING S-001 FOR SPECIFIC SEISMIC LOADS. BUILDING SEISMIC DESIGN CATEGORY A REQUIRES NO ADDITIONAL BRACING.
3. PRELIMINARY FIRE PUMP SIZE CALCULATED IS 250 GPM AT 70 PSI. FIRE PUMP TO PRODUCE A MINIMUM OF 65% OF RATED HEAD AT 150% RATED FLOW. A MINIMUM OF 10 PSI SAFETY CUSHION TO BE PROVIDED BETWEEN THE HYDRAULIC DEMAND AND PUMP DISCHARGE PRESSURE. PUMP LOCATION TO BE IN HEATED BUILDING ON SOUTH SIDE OF NEW STRUCTURE. TO BE SUPPLIED BY UNDERGROUND WATER STORAGE TANK.
4. PROVIDE FIRE PUMP AND WATER STORAGE TANK TO BE IN ACCORDANCE WITH MANUFACTURES REQUIREMENTS AND APPLICABLE NFPA STANDARDS.
5. MUNICIPAL WATER IS NOT AVAILABLE ON SITE. SPRINKLER SYSTEM TO BE SUPPLIED FROM WATER STORAGE TANK IN ACCORDANCE WITH NFPA-22. SYSTEM REQUIRES 344.2 GPM FOR A 60 MINUTE DURATION, MINIMUM USEABLE WATER STORAGE REQUIREMENT IS 20,652 GALLONS. 30,000 GALLON STORAGE TANK TO BE PROVIDED BY CONSTRUCTION CONTRACT. SEE CIVIL DRAWINGS.

36x24 PLOT SHEET

NEW YORK STATE OF OPPORTUNITY. Office of General Services
DESIGN & CONSTRUCTION

CONSULTANT:
LaBella Powered by partnership.
MH PROFESSIONAL ENGINEERING, PLLC

WARNING:
THE ALTERATION OF THIS MATERIAL IN ANY WAY, UNLESS DONE UNDER THE DIRECTION OF A COMPARABLE PROFESSIONAL, I.E. ARCHITECT FOR AN ARCHITECT, ENGINEER FOR AN ENGINEER OR LANDSCAPE ARCHITECT FOR A LANDSCAPE ARCHITECT, IS A VIOLATION OF THE NEW YORK STATE EDUCATION LAW AND/OR REGULATIONS AND IS A CLASS 'A' MISDEMEANOR.

PROFESSIONAL ENGINEER MICHAEL M. HOUGHTALING 072116 STATE OF NEW YORK

CONTRACT:

TITLE:
PROVIDE SUB-HEADQUARTERS BUILDING

LOCATION:
DOT REGION 8, DUTCHESS COUNTY
205 LIME KILN RD.
EAST FISHKILL, NEW YORK 12533

CLIENT:
NEW YORK STATE DEPARTMENT OF TRANSPORTATION

MARK	DATE	DESCRIPTION
	10/17/2019	BID DOCUMENTS

PROJECT NUMBER: 45552-
DESIGNED BY:
DRAWN BY:
FIELD CHECK:
APPROVED:

SHEET TITLE:
FIRE PROTECTION SYMBOLS, NOTES, & ABBREVIATIONS

DRAWING NUMBER: FP-001

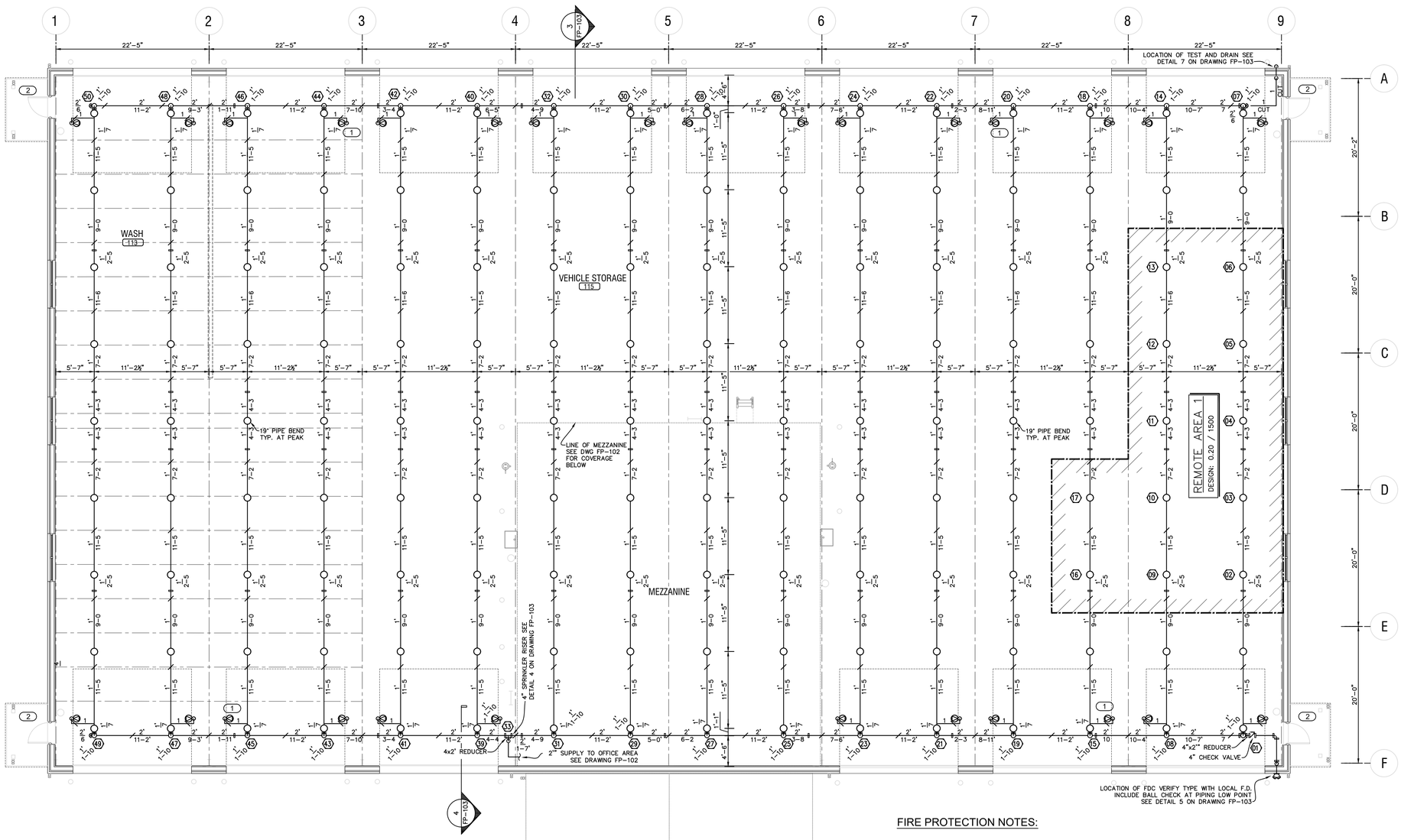

1 FP-101 Fire Protection Plan
SCALE: 1/8"=1'-0"

FIRE PROTECTION NOTES:

1. COORDINATE SPRINKLER HEAD TEMPERATURES WITH LOCATION OF HEATING EQUIPMENT PROVIDE INTERMEDIATE OR HIGH TEMPERATURE SPRINKLERS AS REQUIRED BY NFPA 13.

HYDRAULIC NOTES FOR WET SYSTEM REMOTE AREA 1:

1. SYSTEM DESIGNED FOR NFPA-13 ORDINARY HAZARD GROUP 2 WITH .20 GPM OVER THE MOST REMOTE 1500 SQUARE FEET.
2. SYSTEM REQUIRES 25.6 GPM AT 10.2 PSI AT THE MOST REMOTE SPRINKLER.
3. SYSTEM REQUIRES 323.3 GPM AT 48.1 PSI AT THE FIRE PUMP DISCHARGE.

KEYED NOTES:

1. SPRINKLER PROTECTION REQUIRED UNDER OVERHEAD DOORS, TO BE SPACED PER LIGHT HAZARD IN ACCORDANCE WITH NFPA-13. TYPICAL ALL DOORS.
2. PROTECTION NOT REQUIRED IN THIS AREA OVERHANG IS NON-COMBUSTIBLE CONSTRUCTION.
3. PROTECTION NOT REQUIRED IN ATTIC SPACE TO BE FRAMED WITH NON-COMBUSTIBLE STEEL TRUSSES.

36x24 PLOT SHEET

NEW YORK STATE OF OPPORTUNITY. Office of General Services

DESIGN & CONSTRUCTION

CONSULTANT:

LaBella Powered by partnership.

MH PROFESSIONAL ENGINEERING, PLLC

WARNING:

THE ALTERATION OF THIS MATERIAL IN ANY WAY, UNLESS DONE UNDER THE DIRECTION OF A COMPARABLE PROFESSIONAL, I.E. ARCHITECT FOR AN ARCHITECT, ENGINEER FOR AN ENGINEER OR LANDSCAPE ARCHITECT FOR A LANDSCAPE ARCHITECT, IS A VIOLATION OF THE NEW YORK STATE EDUCATION LAW AND/OR REGULATIONS AND IS A CLASS 'A' MISDEMEANOR.

PROFESSIONAL ENGINEER MICHELLE M. HOUGHTALING 072116 STATE OF NEW YORK

CONTRACT:

TITLE:

PROVIDE SUB-HEADQUARTERS BUILDING

LOCATION:
DOT REGION 8, DUTCHESS COUNTY
205 LIME KILN RD.
EAST FISHKILL, NEW YORK 12533

CLIENT:
NEW YORK STATE DEPARTMENT OF TRANSPORTATION

MARK	DATE	DESCRIPTION
	10/17/2019	BID DOCUMENTS

PROJECT NUMBER: 45552-

DESIGNED BY:

DRAWN BY:

FIELD CHECK:

APPROVED:

SHEET TITLE:

FIRE PROTECTION PLAN

DRAWING NUMBER:

FP-101

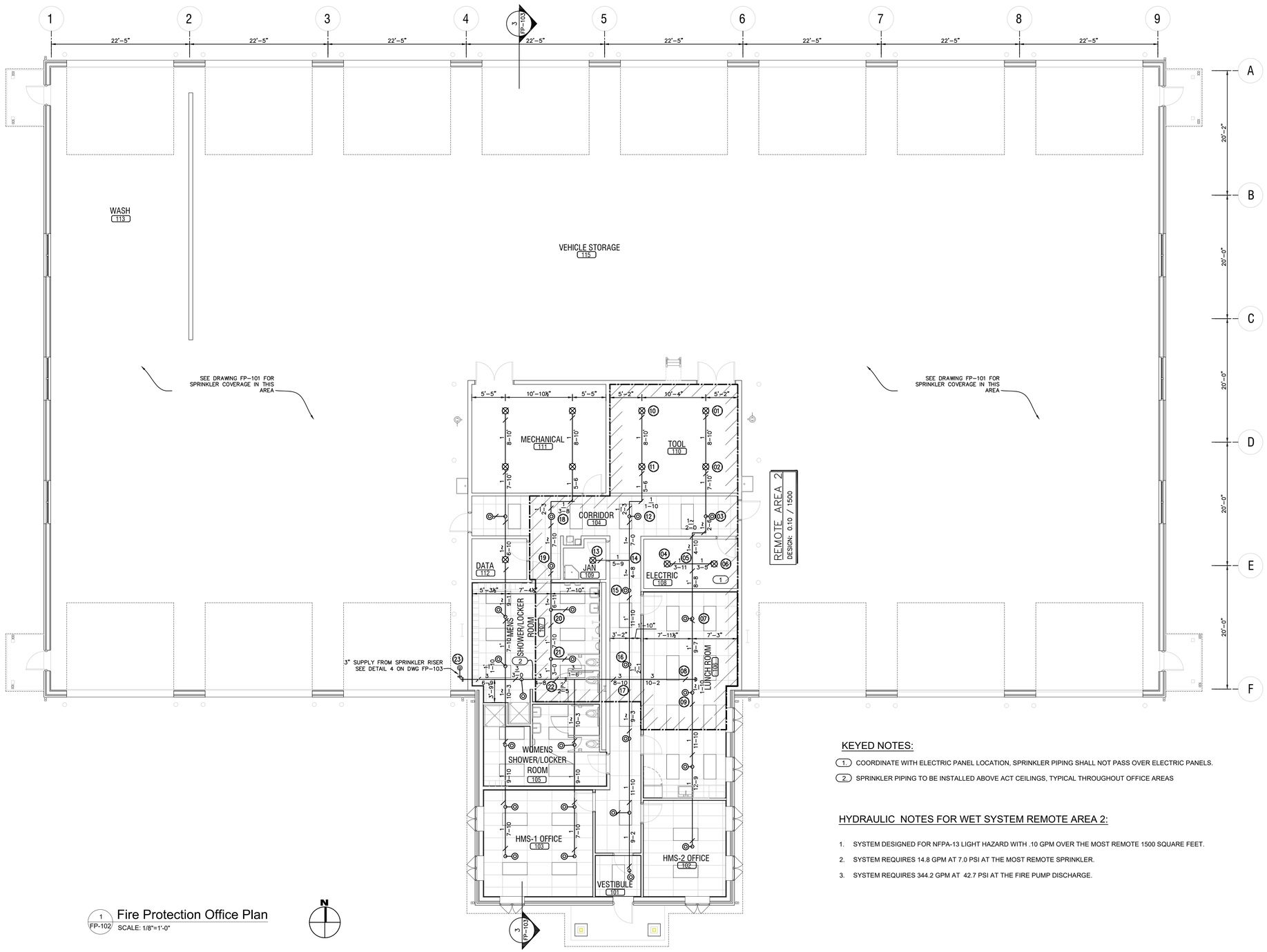

1 FP-102 Fire Protection Office Plan

SCALE: 1/8"=1'-0"

KEYED NOTES:

1. COORDINATE WITH ELECTRIC PANEL LOCATION, SPRINKLER PIPING SHALL NOT PASS OVER ELECTRIC PANELS.
2. SPRINKLER PIPING TO BE INSTALLED ABOVE ACT CEILINGS, TYPICAL THROUGHOUT OFFICE AREAS

HYDRAULIC NOTES FOR WET SYSTEM REMOTE AREA 2:

1. SYSTEM DESIGNED FOR NFPA-13 LIGHT HAZARD WITH .10 GPM OVER THE MOST REMOTE 1500 SQUARE FEET.
2. SYSTEM REQUIRES 14.8 GPM AT 7.0 PSI AT THE MOST REMOTE SPRINKLER.
3. SYSTEM REQUIRES 344.2 GPM AT 42.7 PSI AT THE FIRE PUMP DISCHARGE.

NEW YORK STATE OF OPPORTUNITY. Office of General Services

DESIGN & CONSTRUCTION

CONSULTANT:

LaBella Powered by partnership.

MH PROFESSIONAL ENGINEERING, PLLC

WARNING:

THE ALTERATION OF THIS MATERIAL IN ANY WAY, UNLESS DONE UNDER THE DIRECTION OF A COMPARABLE PROFESSIONAL, I.E. ARCHITECT FOR AN ARCHITECT, ENGINEER FOR AN ENGINEER OR LANDSCAPE ARCHITECT FOR A LANDSCAPE ARCHITECT, IS A VIOLATION OF THE NEW YORK STATE EDUCATION LAW AND/OR REGULATIONS AND IS A CLASS 'A' MISDEMEANOR.

PROFESSIONAL ENGINEER MICHELLE M. HOUGHTALING 072116 STATE OF NEW YORK

CONTRACT:

TITLE: PROVIDE SUB-HEADQUARTERS BUILDING

LOCATION: DOT REGION 8, DUTCHESS COUNTY
205 LIME KILN RD.
EAST FISHKILL, NEW YORK 12533

CLIENT: NEW YORK STATE DEPARTMENT OF TRANSPORTATION

MARK	DATE	DESCRIPTION
	10/17/2019	BID DOCUMENTS

PROJECT NUMBER: 45552-

DESIGNED BY:

DRAWN BY:

FIELD CHECK:

APPROVED:

SHEET TITLE: FIRE PROTECTION OFFICE PLAN

DRAWING NUMBER: FP-102

36x24 PLOT SHEET

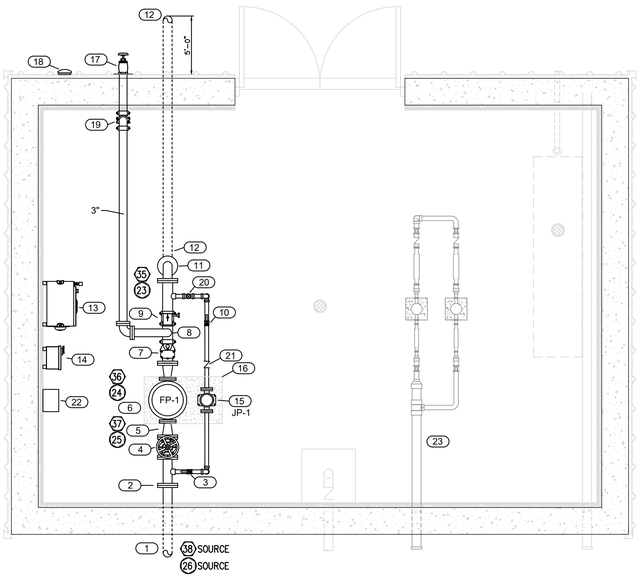

1 FP-103 **Pump House Plan**
SCALE: 3/8"=1'-0"

KEYED NOTES:

1. 4" UNDERGROUND SUPPLY FROM TANK BY CONSTRUCTION CONTRACT
2. CONNECT TO 4" FLANGE PROVIDED BY CONSTRUCTION CONTRACT
3. 1 ¼" SLOW CLOSE BALL VALVE WITH TAMPER SWITCH TO SUPPLY TO JOCKEY PUMP
4. 4" OS&Y GATE VALVE WITH TAMPER
5. 4"x3" ECCENTRIC REDUCER
6. 250 GPM @ 70 PSI VERTICAL INLINE FIRE PUMP FP-1
7. 4" FIRE PUMP DISCHARGE CHECK VALVE
8. 3" OVERHEAD SUPPLY TO PUMP TEST VALVE INCLUDE 3" NORMALLY CLOSED BUTTERFLY VALVE WITH TAMPER AT TEE
9. 4" BUTTERFLY VALVE WITH TAMPER
10. 1 ¼" SLOW CLOSE BALL VALVE WITH TAMPER SWITCH DISCHARGE FROM JOCKEY PUMP
11. 4"DOWN TO BELOW SLAB
12. CONTINUE 4" UNDERGROUND SUPPLY TO BUILDING BY CONSTRUCTION CONTRACT
13. FIRE PUMP CONTROLLER WITH TRANSFER SWITCH
14. JOCKEY PUMP CONTROLLER
15. JOCKEY PUMP JP-1
16. CONCRETE HOUSEKEEPING PAD BY CONSTRUCTION CONTRACT
17. 3x2½" PUMP TEST VALVE AT 3'-0" ABOVE GRADE INCLUDE WALL PLATE LABELED "PUMP TEST CONNECTION"
18. EXTERIOR HORN/STROBE
19. PROVIDE BALL CHECK DRAIN TO EXTERIOR OFF LOW POINT OF TEST HEADER
20. 1 ¼" RISER TO PUMP ROOM SPRINKLERS SEE DETAIL 8 ON DRAWING FP-103
21. 1 ¼" JOCKEY PUMP DISCHARGE CHECK VALVE
22. FIRE WATER TANK LOW /HIGH WATER LEVEL ALARM
23. DOMESTIC SERVICE REFER TO P-106

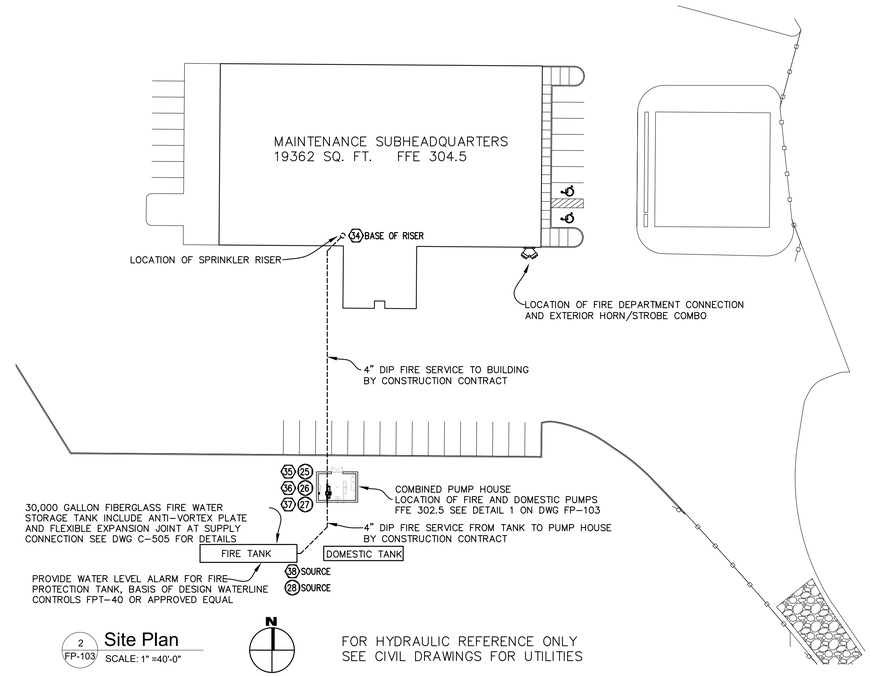

2 FP-103 **Site Plan**
SCALE: 1" =40'-0"

FOR HYDRAULIC REFERENCE ONLY
SEE CIVIL DRAWINGS FOR UTILITIES

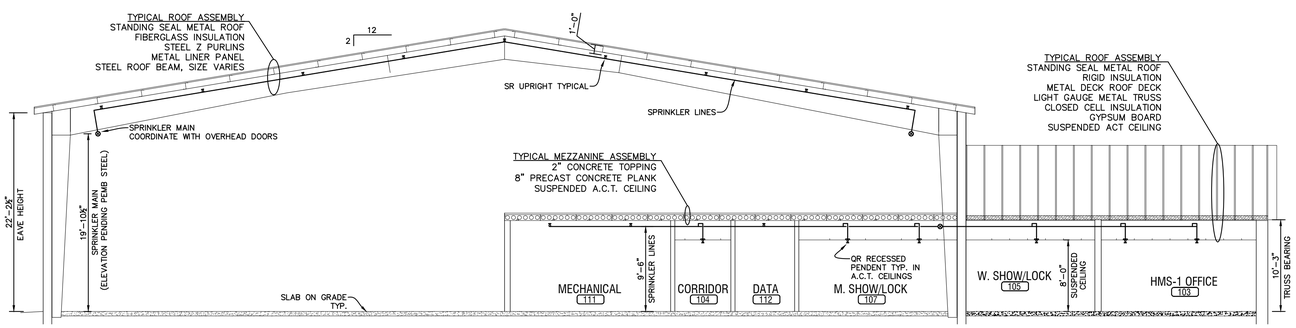

3 FP-103 **BUILDING SECTION**
SCALE: 1/8"=1'-0"

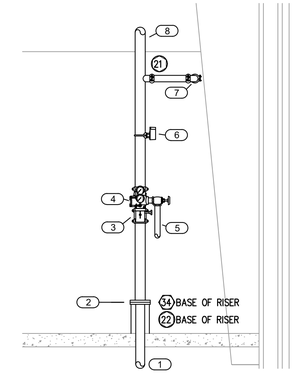

KEYED NOTES:

1. 4" UNDERGROUND SUPPLY FROM PUMP HOUSE BY CONSTRUCTION CONTRACT CONNECT 5 FT FROM BUILDING WALL. PROVIDE WITH RESTRAINING RODS.
2. 4" FLANGE CONNECTION
3. 4" BUTTERFLY VALVE WITH TAMPER
4. 4" RISER CHECK VALVE
5. 2" MAIN DRAIN TO EXTERIOR
6. 4" FLOW SWITCH
7. 3" SUPPLY TO OFFICE
8. 4" SUPPLY TO ROOF LEVEL PIPING

4 FP-103 **Riser Elevation**
SCALE: 3/8"=1'-0"

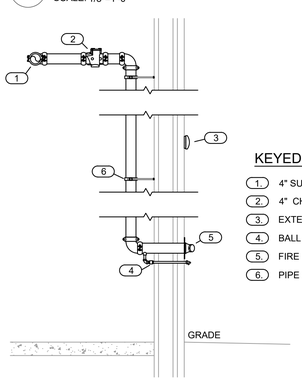

KEYED NOTES:

1. 4" SUPPLY TO SPRINKLER MAIN
2. 4" CHECK VALVE
3. EXTERIOR HORN STROBE 10'-0" ABOVE GRADE
4. BALL CHECK, PIPE DRAIN TO EXTERIOR
5. FIRE DEPARTMENT CONNECTION 3'-6" ABOVE GRADE
6. PIPE SUPPORT TO STRUCTURE AS REQUIRED

5 FP-103 **Fire Department Connection Detail**
SCALE: 3/8"=1'-0"

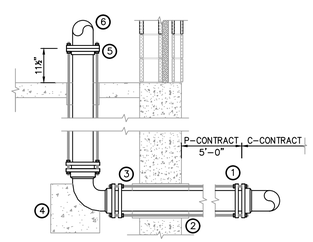

KEY:

1. – 4" DI WATER SERVICE WITH RESTRAINED JOINTS AT BUILDING ENTRANCE
2. – SCHEDULE 40 GALVANIZED SLEEVE PAST BUILDING FOUNDATION
3. – SYMMETRICAL SPACED THREADED ROD PER NFPA STANDARDS
4. – CONCRETE THRUST BLOCK, SEE DETAIL 1 ON DRAWING C-509 FOR SIZING
5. – FLANGE TO HAVE TWO BOLT HOLES ALIGNED WITH EXTERIOR WALL
6. – SEE DETAIL 2 ON DRAWING FP-201 FOR CONTINUATION

NOTE: SERVICE TO BE INSTALLED IN ACCORDANCE WITH NFPA-24

6 FP-103 **Water Service Entrance Detail**
SCALE: NTS

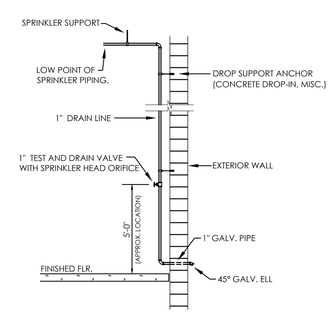

7 FP-103 **Test and Drain Connection**
SCALE: NTS

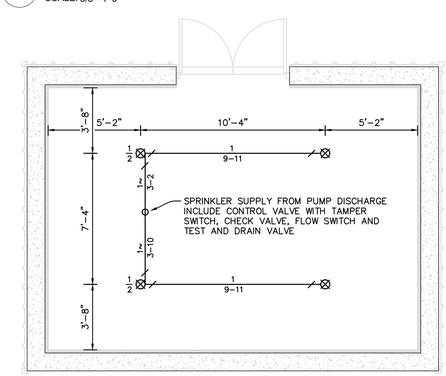

8 FP-103 **Pump House Sprinkler Plan**
SCALE: 1/4"=1'-0"

36x24 PLOT SHEET

NEW YORK STATE OF OPPORTUNITY. Office of General Services
DESIGN & CONSTRUCTION

CONSULTANT:
LaBella Powered by partnership.
MH PROFESSIONAL ENGINEERING, PLLC

WARNING:
THE ALTERATION OF THIS MATERIAL IN ANY WAY, UNLESS DONE UNDER THE DIRECTION OF A COMPARABLE PROFESSIONAL, I.E. ARCHITECT FOR AN ARCHITECT, ENGINEER FOR AN ENGINEER OR LANDSCAPE ARCHITECT FOR A LANDSCAPE ARCHITECT, IS A VIOLATION OF THE NEW YORK STATE EDUCATION LAW AND/OR REGULATIONS AND IS A CLASS 'A' MISDEMEANOR.

PROFESSIONAL ENGINEER MICHELLE M. HOUGHTALING 072116 STATE OF NEW YORK

CONTRACT:

TITLE:
PROVIDE SUB-HEADQUARTERS BUILDING

LOCATION:
DOT REGION 8, DUTCHESS COUNTY
205 LIME KILN RD.
EAST FISHKILL, NEW YORK 12533

CLIENT:
NEW YORK STATE DEPARTMENT OF TRANSPORTATION

MARK	DATE	DESCRIPTION
	10/17/2019	BID DOCUMENTS

PROJECT NUMBER: 45552-
DESIGNED BY:
DRAWN BY:
FIELD CHECK:
APPROVED:

SHEET TITLE:
FIRE PROTECTION DETAILS

DRAWING NUMBER: **FP-103**

DEVICES

NOTE: ALL RECEPTACLES AND SWITCHES SHALL BE BY A SINGLE MANUFACTURER.

RECEPTACLES

G WP — DUPLEX RECEPTACLE, 20A, 120V
-"G" INDICATES GROUND FAULT INTERRUPTER
-"WP" INDICATES WEATHER RESISTANT OUTDOOR COVER
-DOT INDICATES 6" ABOVE BACKSPLASH OF COUNTER/OR SINK (VERTICALLY) (OR 6" ABOVE COUNTER/OR SINK WHEN NO BACKSPLASH EXISTS)

G — QUAD RECEPTACLE, 20A, 120V
-"G" INDICATES GROUND FAULT INTERRUPTER
-DOT INDICATES 6" ABOVE BACKSPLASH OF COUNTER/OR SINK (VERTICALLY) (OR 6" ABOVE COUNTER/OR SINK WHEN NO BACKSPLASH EXISTS)

G WP — DUPLEX RECEPTACLE, 20A, 120V ON EMERGENCY CIRCUIT
-DEVICE TO BE RED
-COVER TO BE ENGRAVED (IN RED) WITH PANEL AND CIRCUIT NUMBER
-"G" INDICATES GROUND FAULT INTERRUPTER
-"WP" INDICATES WEATHER RESISTANT OUTDOOR COVER
-DOT INDICATES 6" ABOVE BACKSPLASH OF COUNTER/OR SINK (VERTICALLY) (OR 6" ABOVE COUNTER/OR SINK WHEN NO BACKSPLASH EXISTS)

G WP — QUAD RECEPTACLE, 20A, 120V ON EMERGENCY CIRCUIT
-DEVICE TO BE RED
-COVER TO BE ENGRAVED (IN RED) WITH PANEL AND CIRCUIT NUMBER
-"G" INDICATES GROUND FAULT INTERRUPTER
-"WP" INDICATES WEATHER RESISTANT OUTDOOR COVER
-DOT INDICATES 6" ABOVE BACKSPLASH OF COUNTER/OR SINK (VERTICALLY) (OR 6" ABOVE COUNTER/OR SINK WHEN NO BACKSPLASH EXISTS)

SPECIAL PURPOSE RECEPTACLE
-NEMA CONFIGURATION INDICATED

C/R — OVERHEAD CORD/REEL AND RECEPTACLE
- DOT FURNISHED, CONTRACTOR INSTALLED

W — WELDING RECEPTACLE, ON EMERGENCY CIRCUIT
-NEMA CONFIGURATION INDICATED

D — FLOOR MOUNTED DUPLEX RECEPTACLE, 20A, 120V

SWITCHES

a — SINGLE POLE SINGLE THROW (SpSt) SWITCH, 20A, 120/277V
-LOWER CASE LETTER(S) INDICATE LAMP CONTROL

3a — 3-WAY SWITCH, 20A, 120/277V
-LOWER CASE LETTER(S) INDICATE LAMP CONTROL

4a — 4-WAY SWITCH, 20A, 120/277V
-LOWER CASE LETTER(S) INDICATE LAMP CONTROL

Da — DIMMER SWITCH
-LOWER CASE LETTER(S) INDICATE LAMP CONTROL

WP — SpSt SWITCH WITH WEATHER-PROOF COVER, 20A, 120/277V

EM — SINGLE POLE SINGLE THROW (SpSt) SWITCH, 20A, 120/277V ON EMERGENCY CIRCUIT.
-TOGGLE TO BE RED
-COVERPLATE TO BE ENGRAVED IN BLACK WITH PANEL & CIRCUIT NUMBER

M — MOTOR RATED SWITCH, 20A, 120/277V

CEILING MOUNTED OCCUPANCY SENSOR
-ARROW(S) INDICATE PRIMARY VIEW OF SENSOR
-TYPE 1, UNLESS OTHERWISE SPECIFICALLY NOTED
-LOWER CASE LETTER(S) INDICATE LAMP CONTROL

PP — OCCUPANCY SENSOR POWER RELAY PACK

OS — WALL MOUNTED PASSIVE INFRARED OCCUPANCY SENSOR
-TYPE 1, UNLESS OTHERWISE SPECIFICALLY NOTED
-LOWER CASE LETTER(S) INDICATE LAMP CONTROL

VS — WALL MOUNTED PASSIVE INFRARED VACANCY SENSOR
-TYPE 1, UNLESS OTHERWISE SPECIFICALLY NOTED
-LOWER CASE LETTER(S) INDICATE LAMP CONTROL

P — PHOTOCELL

TELEPHONE/DATA/CABLE TELEVISION

W — TELEPHONE AND/OR DATA WALL OUTLET
-PROVIDE 4" SQ. BOX WITH 1-GANG PLASTER RING
-PROVIDE 1"C W/PULLSTRING TO ABOVE ACCESSIBLE CEILING
-"W" INDICATES WALL MOUNTED AT 48"AFF

TELEPHONE AND/OR DATA WALL OUTLET
-PROVIDE 4" SQ. BOX WITH 1-GANG PLASTER RING
-PROVIDE 1"C W/PULLSTRING TO ABOVE ACCESSIBLE CEILING
-DOT INDICATES 6" ABOVE BACKSPLASH OF COUNTER/OR SINK (VERTICALLY) (OR 6" ABOVE COUNTER/OR SINK WHEN NO BACKSPLASH EXISTS)
REFER TO DETAIL #5/E-402.

TV — CABLE TV (WALL MOUNTED OR CEILING MOUNTED AS INDICATED)
-FIELD VERIFY EXACT LOCATION WITH DIRECTOR'S REPRESENTATIVE, PRIOR TO ROUGH-IN
-OUTLET BOX TO BE ADJACENT TO TV BRACKET
-PROVIDE 2-GANG BOX WITH DIVIDER
-PROVIDE DUPLEX RECEPTACLE IN 1ST GANG
-PROVIDE 1"C W/PULLSTRING TO ABOVE ACCESSIBLE CEILING IN 2ND GANG
-PROVIDE DOUBLE DUPLEX COVERPLATE

SWITCHGEAR & MISC.

BRANCH CIRCUIT PANELBOARD - SURFACE MOUNTED

BRANCH CIRCUIT PANELBOARD - FLUSH MOUNTED

M — METER

J — JUNCTION BOX
-WALL OR CEILING MOUNTED, AS INDICATED
-SIZE JUNCTION BOX PER NEC ARTILCE 314 AND NUMBER OF CONDUITS.
-DE-RATE THE CONDUCTORS AS REQUIRED BY THE NEC ARTICLE 310.

MOTOR STARTER

COMBINATION MOTOR STARTER / DISCONNECT SWITCH

DISCONNECT SWITCH - FUSED

DISCONNECT SWITCH - NON-FUSED

MOTOR OR HVAC UNIT - BY OTHERS

PB — PULLBOX

VFD — VARIABLE FREQUENCY DRIVE
-FURNISHED BY MC & INSTALLED BY EC
-NOTE TO EC: THE LINE & LOAD CONDUCTORS ENTERING / LEAVING THE VFD SHALL BE KEPT ENTIRELY INDEPENDENT FROM ONE ANOTHER. LINE & LOAD CONDUCTORS ARE NOT PERMITTED TO OCCUPY THE SAME RACEWAY, TROUGH, ELECTRICAL BOX, ETC..

OVERHEAD DOOR PUSH BUTTON STATION

CONDUIT OR CABLE

NOTE: LINES MAY BE CURVED OR STRAIGHT

NORMAL POWER CIRCUIT OR FEEDER

UG — UNDERGROUND POWER CIRCUIT OR FEEDER

UT — UNDERGROUND CONDUIT FOR TELECOM

NORMAL POWER HOMERUN TO PANEL

UG — UNDERGROUND ELECTRIC POWER HOMERUN TO PANEL

SURFACE METAL RACEWAY

LIGHTING

FIXTURES

NOTE: REFER TO LIGHT FIXTURE SCHEDULE FOR FIXTURE DESIGNATIONS, DESCRIPTIONS AND MANUFACTURERS

ROADWAY POLE

INDUSTRIAL STRIP FIXTURE, LENGTH AS INDICATED

RECESSED DOWNLIGHT
-SHADING INDICATES EMERGENCY CIRCUIT TO FEED FIXTURE

WALLPACK

1' X 4' SURFACE OR RECESSED FIXTURE
-SHADING INDICATES EMERGENCY CIRCUIT TO FEED FIXTURE

2' X 4' SURFACE OR RECESSED FIXTURE
-SHADING INDICATES EMERGENCY CIRCUIT TO FEED FIXTURE

SINGLE FACE EXIT LIGHT FED FROM EMERGENCY CIRCUIT
-ARROW DIRECTION INDICATED
-WALL OR CEILING MOUNTED

DOUBLE FACE EXIT LIGHT FED FROM EMERGENCY CIRCUIT
-ARROW DIRECTION INDICATED
-WALL OR CEILING MOUNTED

GTD — GENERATOR TRANSFER DEVICE; UL 924
-REFER TO DETAIL #5/E-403

CEILING MOUNTED DAYLIGHT SENSOR

SECURITY SYSTEM

SURFACE MOUNTED CLOSED CIRCUIT TELEVISION (BY OWNER)
-CAMERA, CAMERA BRACKET AND LOW VOLTAGE WIRING BY OWNER
-FIELD VERIFY EXACT LOCATION WITH OWNER, PRIOR TO ROUGH-IN
-PROVIDE 1" CONDUIT WITH PULLSTRING BACK TO 12"X12"X4" JUNCTION BOX MOUNTED ABOVE CEILING IN OFFICE 102.

FIRE ALARM

FACP — FIRE ALARM CONTROL PANEL

RAP — REMOTE ANNUNCIATOR PANEL WITH SILENCER

F — PULL STATION

F — AUDIO DEVICE

F — AUDIO / VISUAL DEVICE

V — VISUAL DEVICE

S — SMOKE DETECTOR

CO — CARBON MONOXIDE SENSOR

FS — FLOW SWITCH
-PROVIDED BY PC
-WIRED BY EC
-(1) MONITOR MODULE AND (1) CONTROL MODULE REQUIRED
-COORDINATE EXACT LOCATION WITH PC, PRIOR TO ROUGH-IN

TS — TAMPER SWITCH
-PROVIDED BY PC
-WIRED BY EC
-(1) MONITOR MODULE
-COORDINATE EXACT LOCATION WITH PC, PRIOR TO ROUGH-IN

PS — PRESSURE SWITCH
-PROVIDED BY PC
-WIRED BY EC
-(1) MONITOR MODULE
-COORDINATE EXACT LOCATION WITH PC, PRIOR TO ROUGH-IN

S — DUCT SMOKE DETECTOR
-COORDINATE EXACT LOCATION WITH MC, PRIOR TO INSTALLATION

ABBREVIATIONS

Ø	PHASE
A	AMPS
AFF	ABOVE FINISHED FLOOR
AFG	ABOVE FINISHED GRADE
BFC	BELOW FINISHED CEILING
C	CONDUIT
CC	CONSTRUCTION CONTRACTOR
CKT	CIRCUIT
CLG	CEILING
DTB	DATA TERMINAL BOARD
DWG	DRAWING
EBS	EMERGENCY BYPASS SWITCH
EC	ELECTRICAL CONTRACTOR
EMT	ELECTRICAL METAL TUBING
EX'G	EXISTING
FACP	FIRE ALARM CONTROL PANEL
GFI	GROUND FAULT INTERRUPTER
G,GND	GROUND
GTD	GENERATOR TRANSFER DEVICE
HP	HORSEPOWER
KVA	KILOVOLT AMPS
L, LTG	LIGHTING
LTFMC	LIQUID TIGHT FLEXIBLE METAL CONDUIT
MC	HVAC CONTRACTOR
MDP	MAIN DISTRIBUTION PANEL
NL	NIGHT LIGHT
NO, #	NUMBER
PC	PLUMBING CONTRACTOR
R, RCPT	RECEPTACLE
RGS	RIGID GALVANIZED STEEL
TBB	TELEPHONE BACKBOARD
TYP	TYPICAL
UC	UNDER COUNTER
UON	UNLESS OTHERWISE NOTED
V	VOLT(S)
WP	WEATHER PROOF

GENERAL NOTE (ALL DRAWINGS):

1. THE BUILDING HAS A SEISMIC DESIGN CATEGORY OF A, IS SITE CLASS B, AND HAS AN IMPORTANCE FACTOR OF 1.0. REFER TO DRAWING S-001 FOR SPECIFIC SEISMIC LOADS. PROVIDE SEISMIC BRACING / SUPPORTS AS REQUIRED BY ASCE 7 FOR ALL CONDUIT AND EQUIPMENT.
2. PROVIDE COPPER CONDUCTORS UNLESS OTHERWISE SPECIFICALLY NOTED.
3. ALL CIRCUITS ARE 2 #12, 1 #12 GND IN ¾" CONDUIT UNLESS OTHERWISE NOTED. WHERE THESE CIRCUITS ARE LONGER THAN 75' UPSIZE CONDUCTORS TO 2 #10, 1 #10 GND.
4. FIELD COORDINATE ALL CONDUIT RUNS BEFORE FABRICATION AND INSTALLATION. NO EXTRAS SHALL BE PERMITTED FOR REROUTING, REFABRICATION, RESTOCKING OR REMOVAL OF INSTALLED WORK DUE TO COORDINATION WITH BUILDING STRUCTURE, WORK OF OTHER TRADES OR EXISTING BUILDING COMPONENTS. DRAWINGS ARE SCHEMATIC AND, CONDUIT RUNS DO NOT SHOW ALL NECESSARY CHANGES IN ELEVATION OR OFFSETS REQUIRED FOR A COMPLETE INSTALLATION. PROVIDE ALL CONDUIT OFFSETS AS REQUIRED FOR THE INSTALLATION OF THE CONDUIT SHOWN ON PLANS.

IECC C103.2.2 (NYS 2016 SUPPLEMENT):
TO THE BEST OF MY KNOWLEDGE, BELIEF, AND PROFESSIONAL JUDGEMENT, THE PLANS AND SPECIFICATIONS ARE IN COMPLIANCE WITH THE 2015 IECC COMMERCIAL PROVISIONS (AS AMENDED BY THE NYS 2016 SUPPLEMENT).

APPLICABLE CODES:

- THE UNIFORM FIRE PREVENTION AND BUILDING CODE-2017
- INTERNATIONAL BUILDING CODE 2015 AS REFERENCED IN THE 2017 UNIFORM CODE SUPPLEMENT
- INTERNATIONAL EXISTING BUILDING CODE 2015 AS REFERENCED IN THE 2017 UNIFORM CODE SUPPLEMENT
- INTERNATIONAL ENERGY CONSERVATION CODE 2015 IN CONJUNCTION WITH THE 2016 SUPPLEMENT TO THE NEW YORK STATE ENERGY CONSERVATION CODE
- INTERNATIONAL FIRE CODE 2015 AS REFERENCED IN THE 2017 UNIFORM CODE SUPPLEMENT
- NEW YORK STATE LABOR DEPARTMENT INDUSTRIAL CODE FOR ITEMS RELATING TO PEOPLE WHO WORK IN THE BUILDING SUCH AS SAFETY GLASS, ASBESTOS ABATEMENT ETC.
- ADA: ICC/ANSI A117.1 (STANDARD ON ACCESSIBLE AND USABLE BUILDINGS AND FACILITIES), AS REFERENCED IN THE CODES ABOVE.
- NATIONAL ELECTRIC CODE NFPA 70, AS REFERENCED IN THE CODES ABOVE

CEILING

NOTE: ALL MOUNTING HEIGHTS ARE FROM FINISHED FLOOR TO CENTERLINE OF BOX, UON.

** EXIT AND EMERGENCY LIGHTS TO BE MOUNTED AT 2" FROM FINISHED CEILING TO TOP OF FIXTURE(S) IN AREAS CONTAINING CEILINGS LESS THAN 95".
NOTE: ALL MOUNTING HEIGHTS ARE FROM FINISHED FLOOR TO CENTERLINE OF BOX, UON.

* NOT ALL DEVICES ARE NECESSARILY USED

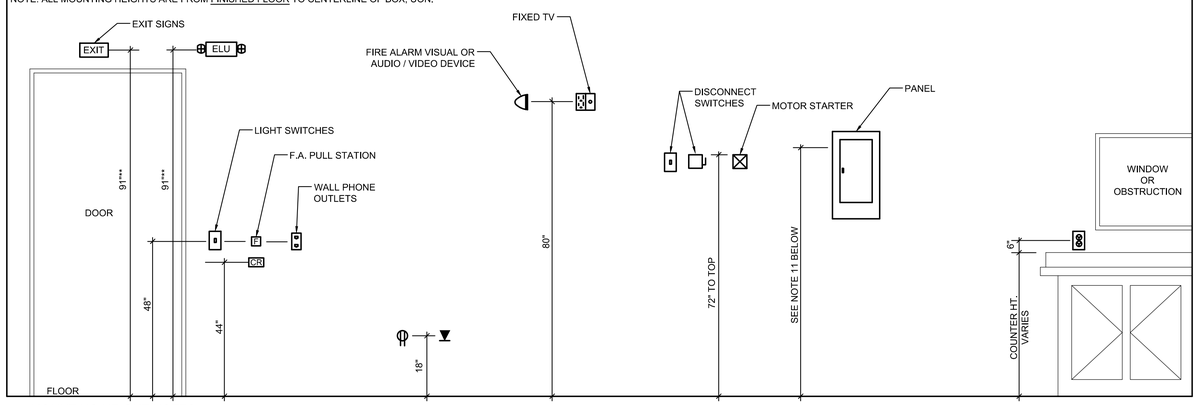

MOUNTING HEIGHT NOTES:

1. THE ABOVE MOUNTING HEIGHTS SHALL APPLY TO ALL DEVICES UNLESS NOTED OTHERWISE ON THE PLANS, ALL NOTED DIMENSIONS ARE TO THE CENTERLINE OF THE DEVICE FROM THE FINISHED FLOOR UNLESS OTHERWISE INDICATED.
2. ELECTRICAL ROUGH-IN IN OCCUPIED SPACES SHALL CONFORM TO THE FOLLOWING GUIDELINES. CONVENIENT LOCATION OF JUNCTION BOXES AT RANDOM STUD LOCATIONS SHALL NOT BE ACCEPTABLE, UNLESS APPROVED BY THE DIRECTOR'S REPRESENTATIVE.
3. WHERE EXISTING OR SPECIAL CONDITIONS PREVENT THE INSTALLATION OF DEVICES AT THE ABOVE HEIGHTS, THE EC SHALL VERIFY HEIGHTS ON SITE WITH THE DIRECTOR'S REPRESENTATIVE.
4. EC SHALL VERIFY FINAL WORKBENCH, COUNTER, CABINET OR VANITY HEIGHTS INCLUDING BACKSPLASH, ON SITE WITH THE CC PRIOR TO INSTALLATION OF BOXES.
5. WHERE SWITCHES, RECEPTACLES, THERMOSTATS, ETC. ARE INDICATED ON WALLS IN PROXIMITY TO ONE ANOTHER, ALIGN THEM VERTICALLY UNLESS OTHERWISE NOTED.
6. WHERE SWITCHES, RECEPTACLES, THERMOSTATS, ETC. ARE LOCATED ADJACENT TO DOOR FRAMES, LOCATE THE NEAR FACE OF THE DEVICE BOX 6" FROM THE FINISH CASING OF THE DOOR FRAME.
7. WHERE RECEPTACLES AND TEL/DATA DEVICE BOXES ARE SHOWN TOGETHER, SET DEVICE BOXES ALIGNED HORIZONTALLY AND 6" APART.
8. WHERE RECEPTACLE ARE SHOWN ADJACENT TO ROOM CORNERS, LOCATE AT APPROPRIATE HEIGHT, 2" - 0 " FROM CORNER.
9. WHERE RECEPTACLES ARE SHOWN NEAR WALL CENTER, LOCATE AT APPROPRIATE HEIGHT, AT CENTER OF WALL.
10. ALL ELECTRICAL ROUGH-IN LOCATIONS IN OCCUPIED SPACES SHALL BE REVIEWED IN THE FIELD BY THE DIRECTOR'S REPRESENTATIVE PRIOR TO WIRING INSTALLATION.
11. PROVIDE PANELBOARDS SUCH THAT HIGHEST CIRCUIT BREAKER IS NO HIGHER THAT 6' - 0" AFF. TOP OF ADJACENT PANELS TO BE AT SAME HEIGHT AFF.

1 / E-001 — Typical Device Mounting Heights Elevation
SCALE: NTS

36x24 PLOT SHEET

NEW YORK STATE OF OPPORTUNITY. Office of General Services
DESIGN & CONSTRUCTION

CONSULTANT:
LaBella Powered by partnership.
MH PROFESSIONAL ENGINEERING, PLLC

WARNING:
THE ALTERATION OF THIS MATERIAL IN ANY WAY, UNLESS DONE UNDER THE DIRECTION OF A COMPARABLE PROFESSIONAL, I.E. ARCHITECT FOR AN ARCHITECT, ENGINEER FOR AN ENGINEER OR LANDSCAPE ARCHITECT FOR A LANDSCAPE ARCHITECT, IS A VIOLATION OF THE NEW YORK STATE EDUCATION LAW AND/OR REGULATIONS AND IS A CLASS 'A' MISDEMEANOR.

PROFESSIONAL ENGINEER MICHELLE M. HOUGHTALING 072116 STATE OF NEW YORK

CONTRACT: ELECTRICAL

TITLE: PROVIDE SUB-HEADQUARTERS BUILDING

LOCATION: DOT REGION 8, DUTCHESS COUNTY
205 LIME KILN RD.
EAST FISHKILL, NEW YORK 12533

CLIENT: NEW YORK STATE DEPARTMENT OF TRANSPORTATION

MARK	DATE	DESCRIPTION
	10/17/2019	BID DOCUMENTS

PROJECT NUMBER:	45552-E
DESIGNED BY:	AH
DRAWN BY:	JM
FIELD CHECK:	
APPROVED:	MH

SHEET TITLE: SYMBOLS, NOTES, AND ABBREVIATIONS

DRAWING NUMBER: E-001

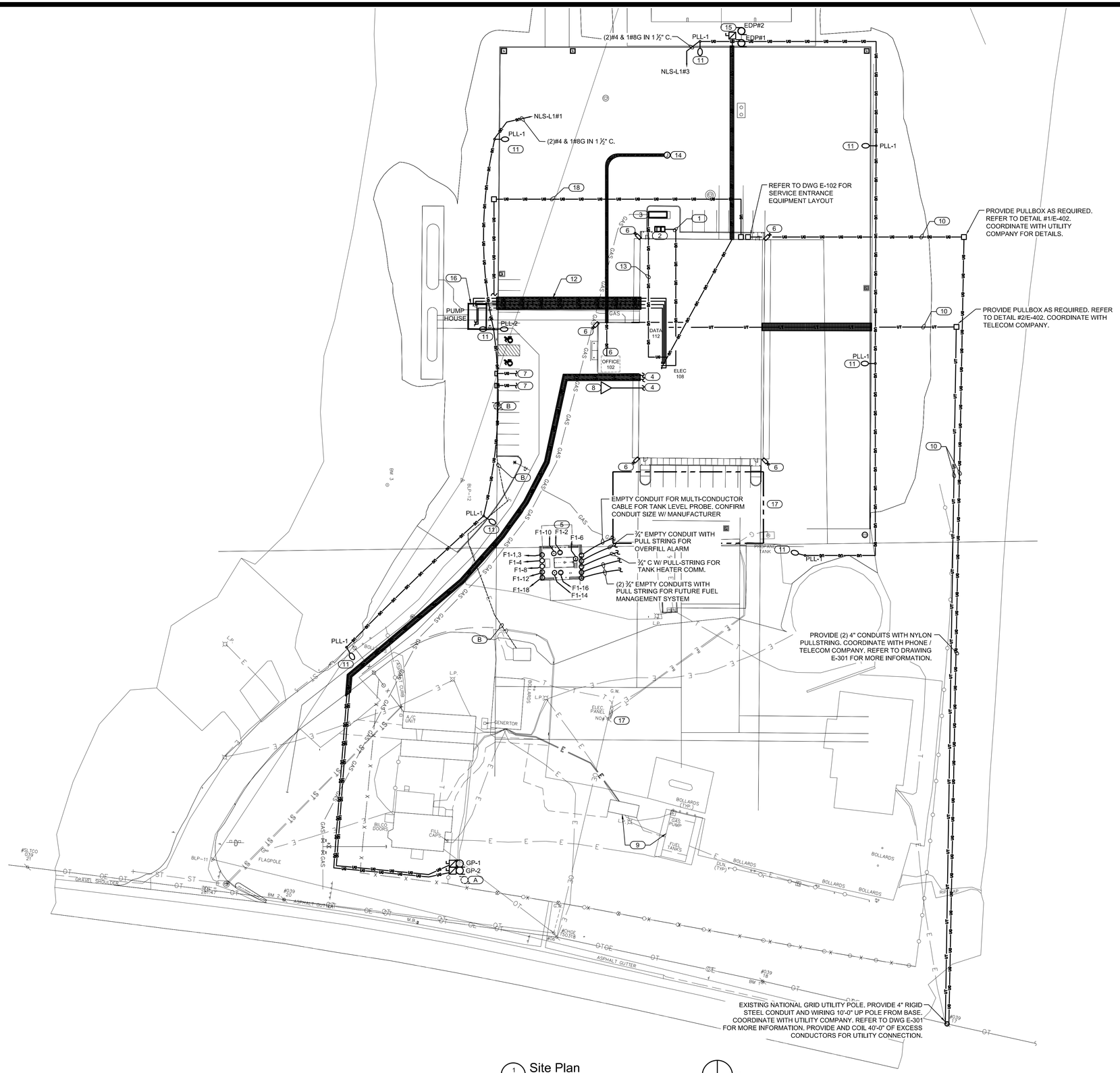

1 E-100 Site Plan
SCALE: 1"=40'-0"

TRUE NORTH AT THE 74°30' MERIDIAN OF WEST LONGITUDE

GENERAL NOTES:

A. ESO#: 773154

B. BRIAN FINN OF CHG&E - 845.897.6104, BFINN@CENHUD.COM

C. REFER TO DETAIL #3/E-402 FOR ALL TRENCHING.

D. ALL CONDUIT(S) DUCTBANK(S) NEED TO PASS THROUGH THE BUILDING FOUNDATION ABOVE THE TOP OF THE FOOTING @ 4'-0". REFER TO REINFORCING DETAIL #9/S301.

E. REFER TO DETAIL #6/E-402 FOR INSTALLATION OF CONDUITS UNDER ROADS AND PARKING LOTS.

F. COORDINATE FINAL LOCATION OF GENERATOR WITH DIRECTOR'S REPRESENTATIVE. DIMENSION AND COORDINATE IN THE FIELD. THE GENERATOR AND AIR COOLED CONDENSING UNIT.

KEYED NOTES:

1. FOR CONDUIT SIZE & # OF CONDUCTORS SEE DRAWING E-201. CONDUITS SHALL BE ROUTED 3'-0" BELOW FINISHED GRADE. PROVIDE SCHEDULE 80 PVC WITH RIGID STEEL LONG SWEEP ELBOWS.

2. AIR COOLED CONDENSING UNIT PROVIDED BY HVAC CONTRACT. COORDINATE EXACT LOCATION WITH HVAC CONTRACTOR. PROVIDE ELECTRICAL CONNECTIONS PER DRAWING E-201 FOR NUMBER OF CONDUITS AND CIRCUITS REQUIRED.

3. 230KW/344KVA 270/480V NATURAL GAS EMERGENCY GENERATOR. MAINTAIN GENERATOR MANUFACTURER'S REQUIRED CLEARANCES. CONCRETE PAD PROVIDED BY C-CONTRACT. COORDINATE EXACT LOCATION WITH DIRECTOR'S REPRESENTATIVE & CIVIL DRAWINGS. REFER TO DWG. NO. E-301 FOR NUMBER OF CONDUITS AND CIRCUITS REQUIRED.

4. FOR CONTINUATION SEE DRAWING #1/E-102.

5. PROVIDE UNDERGROUND RACEWAYS, CABLES, CONDUCTORS, SEALS, FITTINGS, & PULLSTRINGS PER FUEL TANK & DISPENSER WIRING DIAGRAMS. CONDUITS FOR CONTROLS TO STUB UP IN OFFICE 102. CONDUITS FOR POWER TO STUB UP IN ELECTRIC RM108. FOR CONTINUATION SEE DRAWING NO. #1/E-102. FOR DETAILS SEE DRAWING NO. E-405.

6. PROVIDE BACK BOX FOR FUTURE CAMERA SYSTEMS MOUNTED JUST BELOW EAVE. PROVIDE 1" C WITH PULLSTRING BACK TO 12"x12"x4" JUNCTION BOX MOUNTED ABOVE CEILING IN OFFICE 102.

7. FUTURE CAR CHARGING STATIONS: PROVIDE (2) 1" EMPTY CONDUITS W/ PULL STRINGS UNDERGROUND TO STUB UP INTO ELECTRIC ROOM UNDER PANEL PP-1. STUB-UP AND CAP CONDUITS FLUSH WITH GRADE.

8. REFER TO DETAIL #2/E-403.

9. DISCONNECT AND REMOVE ALL FUEL ISLAND TANK(S) CONDUIT AND WIRE BACK TO SOURCE.

10. REFER TO DETAIL #3/E-402.

11. REFER TO DETAIL #4/E-404.

12. LIST OF CONDUITS:
    - 12.1. DWP-1 - 1"C.
    - 12.2. DWP-2 - 1"C.
    - 12.3. FP-1 - 1"C. (EM CIRCUIT)
    - 12.4. JP-1 - 3/4"C.
    - 12.5. UH-14 - 1"C.
    - 12.6. FIRE ALARM [NOTIFICATION] - 1"C.
    - 12.7. FIRE ALARM [DETECTION] - 1"C.
    - 12.8. LEVEL MONITORING - 1"C.
    - 12.9. ATS CONTROL WIRING - 1"C.
    - 12.10. LIGHT CIRCUIT - 1"C.
    - 12.11. FIRE PUMP MONITORING - 2" C

13. FOR CONDUIT SIZE & # OF CONDUCTORS SEE DETAIL #1/E-301. CONDUITS SHALL BE ROUTED 3'-0" BELOW FINISHED GRADE. PROVIDE SCHEDULE 80 PVC WITH RIGID STEEL LONG SWEEP ELBOWS.

14. PROVIDE (1) 1" CONDUIT WITH PULLROPE FOR OIL/WATER SEPARATOR CONTROL WIRES TO OFFICE 102.

15. PROVIDE (2) 1" CONDUITS FOR POWER AND (2) 3/4" CONDUITS WITH PULLROPE FOR CONTROLS FROM CONTROL PANEL, PROVIDED BY C-CONTRACT, TO EACH RESPECTIVE VAULT WITH SEAL TIGHT FITTINGS.

16. PUMP HOUSE. REFER TO DETAILS #1/E-105 & #2/E-105.

17. APPROXIMATE LOCATION FOR CONSTRUCTION TRAILER(S). PROVIDE OVERHEAD, TEMPORARY SERVICE FROM EXISTING POLE. 100A, 120/208V, 3-PHASE PER EACH TRAILER. COORDINATE SERVICE WITH LOCAL UTILITY.

18. PROVIDE (1) 4" C FOR FIRE PUMP NORMAL POWER. REFER TO E-301.

REMOVAL NOTES:

A. DISCONNECT AND REMOVE SANITARY PUMP STATION CONDUIT AND WIRE BACK TO SOURCE. REFER TO DRAWING D-101.

B. DISCONNECT AND REMOVE EXISTING WELL CONDUIT AND WIRE BACK TO SOURCE. REFER TO DRAWING D-101.

NEW YORK STATE OF OPPORTUNITY. Office of General Services

DESIGN & CONSTRUCTION

CONSULTANT:

LaBella Powered by partnership.

MH PROFESSIONAL ENGINEERING, PLLC

WARNING:
THE ALTERATION OF THIS MATERIAL IN ANY WAY, UNLESS DONE UNDER THE DIRECTION OF A COMPARABLE PROFESSIONAL, I.E. ARCHITECT FOR AN ARCHITECT, ENGINEER FOR AN ENGINEER OR LANDSCAPE ARCHITECT FOR A LANDSCAPE ARCHITECT, IS A VIOLATION OF THE NEW YORK STATE EDUCATION LAW AND/OR REGULATIONS AND IS A CLASS 'A' MISDEMEANOR.

PROFESSIONAL ENGINEER MICHELLE M. HOUGHALEN 072116 STATE OF NEW YORK

CONTRACT: ELECTRICAL

TITLE: PROVIDE SUB-HEADQUARTERS BUILDING

LOCATION: DOT REGION 8, DUTCHESS COUNTY
205 LIME KILN RD.
EAST FISHKILL, NEW YORK 12533

CLIENT: NEW YORK STATE DEPARTMENT OF TRANSPORTATION

MARK	DATE	DESCRIPTION
	10/17/2019	BID DOCUMENTS

PROJECT NUMBER:	45552-E
DESIGNED BY:	AH
DRAWN BY:	JM
FIELD CHECK:	
APPROVED:	MH

SHEET TITLE: SITE PLAN

DRAWING NUMBER: E-100

36x24 PLOT SHEET

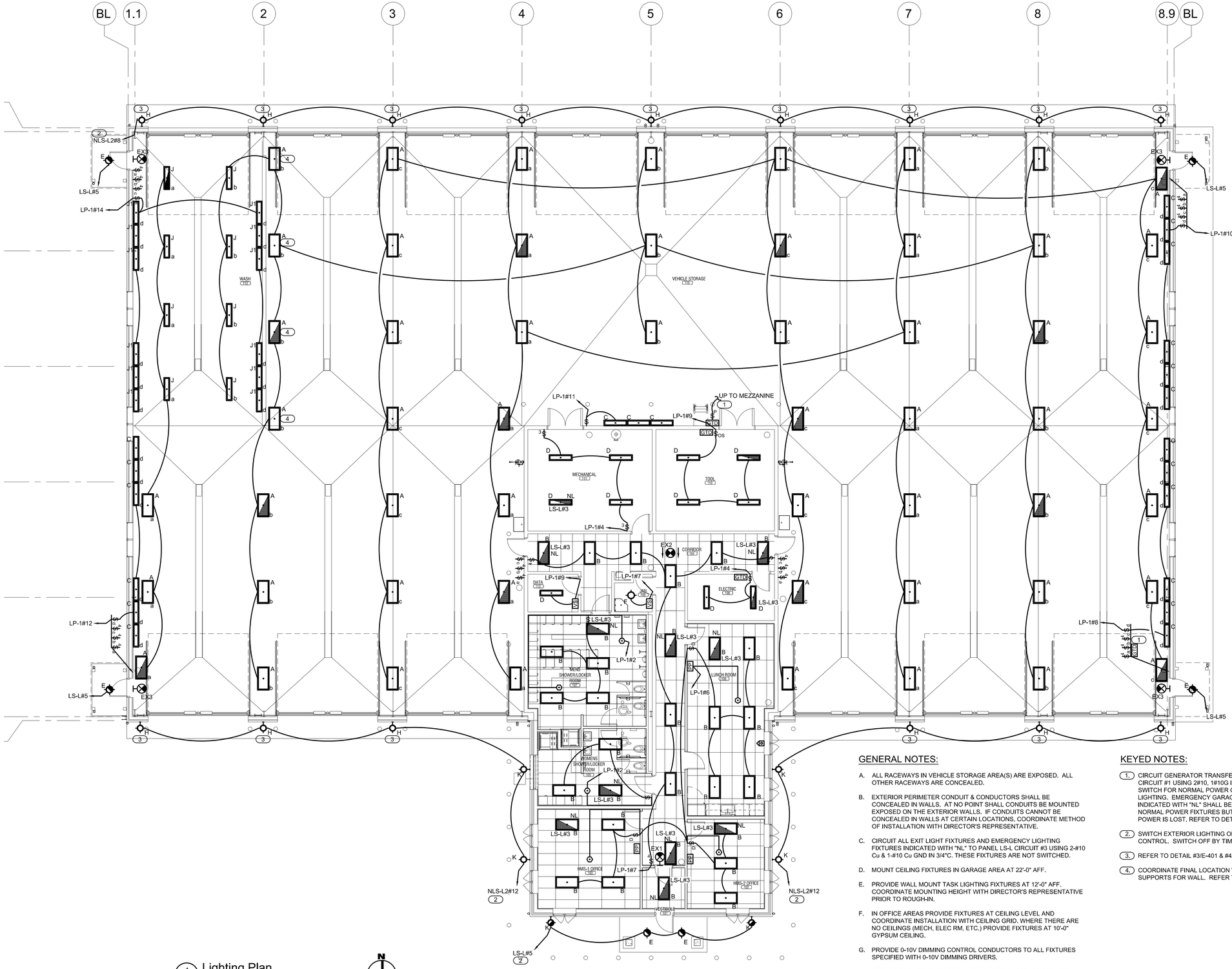

1 E-101 Lighting Plan

SCALE: 1/8"=1'-0"

GENERAL NOTES:

A. ALL RACEWAYS IN VEHICLE STORAGE AREA(S) ARE EXPOSED. ALL OTHER RACEWAYS ARE CONCEALED.

B. EXTERIOR PERIMETER CONDUIT & CONDUCTORS SHALL BE CONCEALED IN WALLS. AT NO POINT SHALL CONDUITS BE MOUNTED EXPOSED ON THE EXTERIOR WALLS. IF CONDUITS CANNOT BE CONCEALED IN WALLS AT CERTAIN LOCATIONS, COORDINATE METHOD OF INSTALLATION WITH DIRECTOR'S REPRESENTATIVE.

C. CIRCUIT ALL EXIT LIGHT FIXTURES AND EMERGENCY LIGHTING FIXTURES INDICATED WITH "NL" TO PANEL LS-L CIRCUIT #3 USING 2-#10 Cu & 1-#10 Cu GND IN 3/4"C. THESE FIXTURES ARE NOT SWITCHED.

D. MOUNT CEILING FIXTURES IN GARAGE AREA AT 22'-0" AFF.

E. PROVIDE WALL MOUNT TASK LIGHTING FIXTURES AT 12'-0" AFF. COORDINATE MOUNTING HEIGHT WITH DIRECTOR'S REPRESENTATIVE PRIOR TO ROUGH-IN.

F. IN OFFICE AREAS PROVIDE FIXTURES AT CEILING LEVEL AND COORDINATE INSTALLATION WITH CEILING GRID. WHERE THERE ARE NO CEILINGS (MECH, ELEC RM, ETC.) PROVIDE FIXTURES AT 10'-0" GYPSUM CEILING.

G. PROVIDE 0-10V DIMMING CONTROL CONDUCTORS TO ALL FIXTURES SPECIFIED WITH 0-10V DIMMING DRIVERS.

H. REFER TO LIGHTING CONTROL MATRIX, DETAIL #1/E-202. PROVIDE ALL NECESSARY POWER PACKS, RELAYS, DIMMING SWITCHES, ETC AS REQUIRED BY LIGHTING CONTROL VENDOR TO MEET THE REQUIREMENTS OF THE LIGHTING CONTROL MATRIX.

KEYED NOTES:

1. CIRCUIT GENERATOR TRANSFER DEVICE TO PANEL LS-L CIRCUIT #1 USING 2#10, 1#10G IN 3/4"C AND AHEAD OF SWITCH FOR NORMAL POWER CIRCUIT OF GARAGE LIGHTING. EMERGENCY GARAGE LIGHTING NOT INDICATED WITH "NL" SHALL BE SWITCHED ALONG WITH NORMAL POWER FIXTURES BUT FORCED ON IF NORMAL POWER IS LOST. REFER TO DETAIL #4/E-403.

2. SWITCH EXTERIOR LIGHTING ON BY PHOTOCELL CONTROL. SWITCH OFF BY TIME CLOCK CONTROL.

3. REFER TO DETAIL #3/E-401 & #4/E-401.

4. COORDINATE FINAL LOCATION WITH OVERHEAD SUPPORTS FOR WALL. REFER TO DETAIL #5/S-303.

36x24 PLOT SHEET

NEW YORK STATE OF OPPORTUNITY. Office of General Services

DESIGN & CONSTRUCTION

CONSULTANT:

LaBella Powered by partnership.

MH PROFESSIONAL ENGINEERING, PLLC

WARNING:

THE ALTERATION OF THIS MATERIAL IN ANY WAY, UNLESS DONE UNDER THE DIRECTION OF A COMPARABLE PROFESSIONAL, I.E. ARCHITECT FOR AN ARCHITECT, ENGINEER FOR AN ENGINEER OR LANDSCAPE ARCHITECT FOR A LANDSCAPE ARCHITECT, IS A VIOLATION OF THE NEW YORK STATE EDUCATION LAW AND/OR REGULATIONS AND IS A CLASS 'A' MISDEMEANOR.

PROFESSIONAL ENGINEER MICHELLE M. HOUGHTALING 072116 STATE OF NEW YORK

CONTRACT: ELECTRICAL

TITLE: PROVIDE SUB-HEADQUARTERS BUILDING

LOCATION: DOT REGION 8, DUTCHESS COUNTY
205 LIME KILN RD.
EAST FISHKILL, NEW YORK 12533

CLIENT: NEW YORK STATE DEPARTMENT OF TRANSPORTATION

MARK	DATE	DESCRIPTION
	10/17/2019	BID DOCUMENTS

PROJECT NUMBER:	45552-E
DESIGNED BY:	AH
DRAWN BY:	JM
FIELD CHECK:	
APPROVED:	MH

SHEET TITLE: LIGHTING PLAN

DRAWING NUMBER: E-101

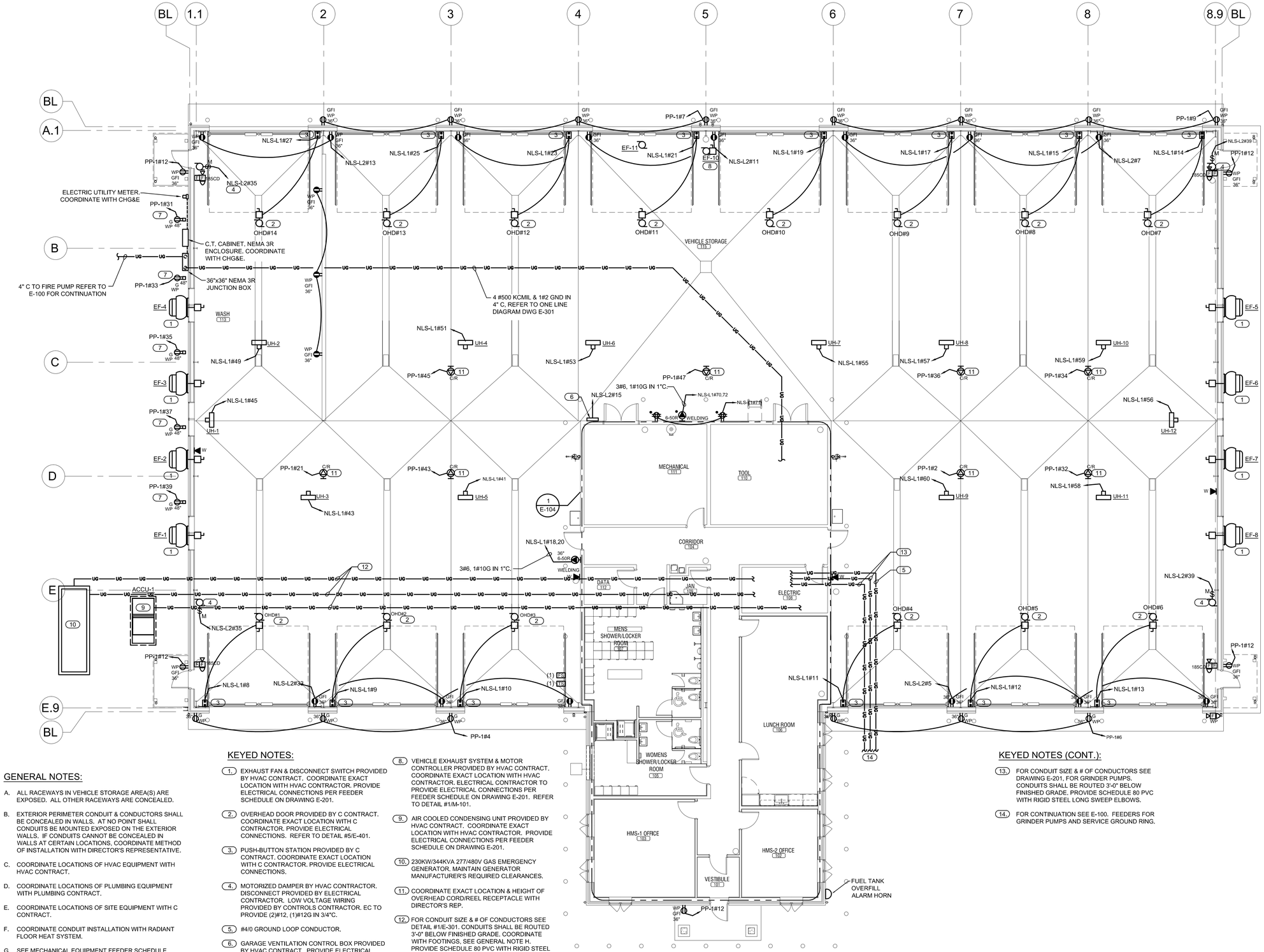

GENERAL NOTES:

A. ALL RACEWAYS IN VEHICLE STORAGE AREA(S) ARE EXPOSED. ALL OTHER RACEWAYS ARE CONCEALED.

B. EXTERIOR PERIMETER CONDUIT & CONDUCTORS SHALL BE CONCEALED IN WALLS. AT NO POINT SHALL CONDUITS BE MOUNTED EXPOSED ON THE EXTERIOR WALLS. IF CONDUITS CANNOT BE CONCEALED IN WALLS AT CERTAIN LOCATIONS, COORDINATE METHOD OF INSTALLATION WITH DIRECTOR'S REPRESENTATIVE.

C. COORDINATE LOCATIONS OF HVAC EQUIPMENT WITH HVAC CONTRACT.

D. COORDINATE LOCATIONS OF PLUMBING EQUIPMENT WITH PLUMBING CONTRACT.

E. COORDINATE LOCATIONS OF SITE EQUIPMENT WITH C CONTRACT.

F. COORDINATE CONDUIT INSTALLATION WITH RADIANT FLOOR HEAT SYSTEM.

G. SEE MECHANICAL EQUIPMENT FEEDER SCHEDULE (DRWG E-201) TO COORDINATE RESPONSIBILITIES BETWEEN EC, MC & PC.

H. ALL CONDUIT(S) DUCTBANK(S) NEED TO PASS THROUGH THE BUILDING FOUNDATION ABOVE THE TOP OF THE FOOTING @ 4'-0". REFER TO REINFORCING DETAIL #9/S301.

KEYED NOTES:

1. EXHAUST FAN & DISCONNECT SWITCH PROVIDED BY HVAC CONTRACT. COORDINATE EXACT LOCATION WITH HVAC CONTRACTOR. PROVIDE ELECTRICAL CONNECTIONS PER FEEDER SCHEDULE ON DRAWING E-201.
2. OVERHEAD DOOR PROVIDED BY C CONTRACT. COORDINATE EXACT LOCATION WITH C CONTRACTOR. PROVIDE ELECTRICAL CONNECTIONS. REFER TO DETAIL #5/E-401.
3. PUSH-BUTTON STATION PROVIDED BY C CONTRACT. COORDINATE EXACT LOCATION WITH C CONTRACTOR. PROVIDE ELECTRICAL CONNECTIONS.
4. MOTORIZED DAMPER BY HVAC CONTRACTOR. DISCONNECT PROVIDED BY ELECTRICAL CONTRACTOR. LOW VOLTAGE WIRING PROVIDED BY CONTROLS CONTRACTOR. EC TO PROVIDE (2)#12, (1)#12G IN 3/4"C.
5. #4/0 GROUND LOOP CONDUCTOR.
6. GARAGE VENTILATION CONTROL BOX PROVIDED BY HVAC CONTRACT. PROVIDE ELECTRICAL CONNECTIONS TO INDIVIDUAL STARTERS IN CONTROL BOX. COORDINATE WITH HVAC CONTRACTOR.
7. PROVIDE 20A GFCI WEATHER RESISTANT RECEPTACLE WITH POWER INDICATOR LIGHT AND WHILE-IN-USE WEATHER RESISTANT ENCLOSURE. REFER TO DETAIL #5/E-403.
8. VEHICLE EXHAUST SYSTEM & MOTOR CONTROLLER PROVIDED BY HVAC CONTRACT. COORDINATE EXACT LOCATION WITH HVAC CONTRACTOR. ELECTRICAL CONTRACTOR TO PROVIDE ELECTRICAL CONNECTIONS PER FEEDER SCHEDULE ON DRAWING E-201. REFER TO DETAIL #1/M-101.
9. AIR COOLED CONDENSING UNIT PROVIDED BY HVAC CONTRACT. COORDINATE EXACT LOCATION WITH HVAC CONTRACTOR. PROVIDE ELECTRICAL CONNECTIONS PER FEEDER SCHEDULE ON DRAWING E-201.
10. 230KW/344KVA 277/480V GAS EMERGENCY GENERATOR. MAINTAIN GENERATOR MANUFACTURER'S REQUIRED CLEARANCES.
11. COORDINATE EXACT LOCATION & HEIGHT OF OVERHEAD CORD/REEL RECEPTACLE WITH DIRECTOR'S REP.
12. FOR CONDUIT SIZE & # OF CONDUCTORS SEE DETAIL #1/E-301. CONDUITS SHALL BE ROUTED 3'-0" BELOW FINISHED GRADE. COORDINATE WITH FOOTINGS, SEE GENERAL NOTE H. PROVIDE SCHEDULE 80 PVC WITH RIGID STEEL LONG SWEEP ELBOWS.

KEYED NOTES (CONT.):

13. FOR CONDUIT SIZE & # OF CONDUCTORS SEE DRAWING E-201, FOR GRINDER PUMPS. CONDUITS SHALL BE ROUTED 3'-0" BELOW FINISHED GRADE. PROVIDE SCHEDULE 80 PVC WITH RIGID STEEL LONG SWEEP ELBOWS.
14. FOR CONTINUATION SEE E-100. FEEDERS FOR GRINDER PUMPS AND SERVICE GROUND RING.

1 E-102 Power & Systems Plan
SCALE: 1/8"=1'-0"

36x24 PLOT SHEET

NEW YORK STATE OF OPPORTUNITY. Office of General Services
DESIGN & CONSTRUCTION

CONSULTANT:
LaBella Powered by partnership.
MH PROFESSIONAL ENGINEERING, PLLC

WARNING:
THE ALTERATION OF THIS MATERIAL IN ANY WAY, UNLESS DONE UNDER THE DIRECTION OF A COMPARABLE PROFESSIONAL, I.E. ARCHITECT FOR AN ARCHITECT, ENGINEER FOR AN ENGINEER OR LANDSCAPE ARCHITECT FOR A LANDSCAPE ARCHITECT, IS A VIOLATION OF THE NEW YORK STATE EDUCATION LAW AND/OR REGULATIONS AND IS A CLASS 'A' MISDEMEANOR.

PROFESSIONAL ENGINEER MICHELLE M. HOUGHTALING 072116 STATE OF NEW YORK

CONTRACT: ELECTRICAL

TITLE: PROVIDE SUB-HEADQUARTERS BUILDING

LOCATION: DOT REGION 8, DUTCHESS COUNTY
205 LIME KILN RD.
EAST FISHKILL, NEW YORK 12533

CLIENT: NEW YORK STATE DEPARTMENT OF TRANSPORTATION

MARK	DATE	DESCRIPTION
	10/17/2019	BID DOCUMENTS

PROJECT NUMBER:	45552-E
DESIGNED BY:	AH
DRAWN BY:	JM
FIELD CHECK:	
APPROVED:	MH

SHEET TITLE: POWER AND SYSTEMS PLAN

DRAWING NUMBER: E-102

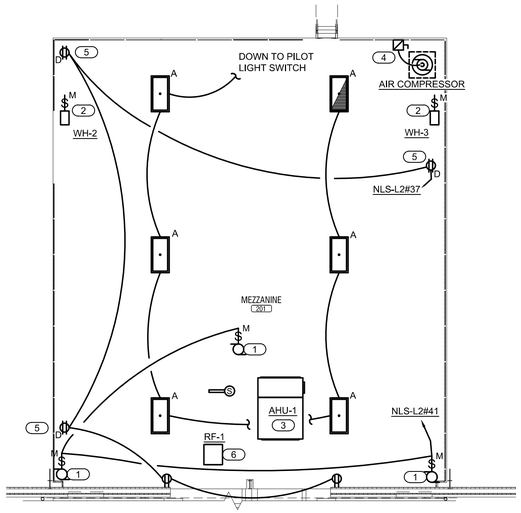

1 E-103 Electrical Mezzanine Plan

SCALE: 1/8"=1'-0"

GENERAL NOTES:

A. ALL RACEWAYS IN VEHICLE STORAGE AREA(S) ARE EXPOSED. ALL OTHER RACEWAYS ARE CONCEALED.

B. EXTERIOR PERIMETER CONDUIT & CONDUCTORS SHALL BE CONCEALED IN WALLS. AT NO POINT SHALL CONDUITS BE MOUNTED EXPOSED ON THE EXTERIOR WALLS. IF CONDUITS CANNOT BE CONCEALED IN WALLS AT CERTAIN LOCATIONS, COORDINATE METHOD OF INSTALLATION WITH DIRECTOR'S REPRESENTATIVE.

C. PROVIDE 0-10V DIMMING CONTROL CONDUCTORS TO ALL FIXTURES SPECIFIED WITH 0-10V DIMMING DRIVERS.

D. PROVIDE ALL NECESSARY POWER PACKS, RELAYS, DIMMING SWITCHES, ETC. AS REQUIRED BY LIGHTING CONTROL VENDOR TO MEET THE REQUIREMENTS OF THE LIGHTING CONTROL MATRIX.

E. COORDINATE LOCATIONS OF HVAC EQUIPMENT WITH HVAC CONTRACT.

F. COORDINATE LOCATIONS OF PLUMBING EQUIPMENT WITH PLUMBING CONTRACT.

G. SEE MECHANICAL EQUIPMENT FEEDER SCHEDULE (DRWG E-201) TO COORDINATE RESPONSIBILITIES BETWEEN EC, MC & PC.

KEYED NOTES:

1. MOTORIZED DAMPER BYHVAC CONTRACT. DISCONNECT PROVIDED BY ELECTRICAL CONTRACTOR. LOW VOLTAGE WIRING PROVIDED BY CONTROLS CONTRACTOR. EC TO PROVIDE (2)#12, (1)#12G. IN 3/4"C.

2. TANKLESS HOT WATER HEATER PROVIDED BY PLUMBING CONTRACTOR. PROVIDE FUSED DISCONNECT FUSED AT 10A AND ALL ELECTRICAL CONNECTIONS.

3. AIR HANDLING UNIT PROVIDED BY HVAC CONTRACT. COORDINATE EXACT LOCATION WITH HVAC CONTRACTOR. PROVIDE ELECTRICAL CONNECTIONS PER FEEDER SCHEDULE ON DRAWING E-201.

4. AIR COMPRESSOR PROVIDED BY PLUMBING CONTRACT. COORDINATE EXACT LOCATION WITH PLUMBING CONTRACTOR. ELECTRICAL CONTRACTOR TO PROVIDE ELECTRICAL CONNECTIONS AND 60A FUSED DISCONNECT FUSED @ 60A.

5. RECEPTACLE BACK BOX TO BE INSTALLED RECESSED INTO MEZZANINE FLOOR. RECEPTACLE TO BE FLUSH WITH FLOOR SURFACE. CONDUIT TO CONNECT TO BACKBOX FROM BELOW.

6. RETURN FAN PROVIDED BY HVAC CONTRACT. COORDINATE EXACT LOCATION WITH HVAC CONTRACTOR. PROVIDE ELECTRICAL CONNECTIONS PER FEEDER SCHEDULE ON DRAWING E-201.

NEW YORK STATE OF OPPORTUNITY. Office of General Services

DESIGN & CONSTRUCTION

CONSULTANT:

LaBella Powered by partnership.

MH PROFESSIONAL ENGINEERING, PLLC

WARNING:

THE ALTERATION OF THIS MATERIAL IN ANY WAY, UNLESS DONE UNDER THE DIRECTION OF A COMPARABLE PROFESSIONAL, I.E. ARCHITECT FOR AN ARCHITECT, ENGINEER FOR AN ENGINEER OR LANDSCAPE ARCHITECT FOR A LANDSCAPE ARCHITECT, IS A VIOLATION OF THE NEW YORK STATE EDUCATION LAW AND/OR REGULATIONS AND IS A CLASS 'A' MISDEMEANOR.

PROFESSIONAL ENGINEER MICHELLE M. HOUGHTALING 072116 STATE OF NEW YORK

CONTRACT: ELECTRICAL

TITLE: PROVIDE SUB-HEADQUARTERS BUILDING

LOCATION: DOT REGION 8, DUTCHESS COUNTY
205 LIME KILN RD.
EAST FISHKILL, NEW YORK 12533

CLIENT: NEW YORK STATE DEPARTMENT OF TRANSPORTATION

MARK	DATE	DESCRIPTION
	10/17/2019	BID DOCUMENTS

PROJECT NUMBER:	45552-E
DESIGNED BY:	AH
DRAWN BY:	JM
FIELD CHECK:	
APPROVED:	MH

SHEET TITLE: ELECTRICAL MEZZANINE PLAN

DRAWING NUMBER: E-103

36x24 PLOT SHEET

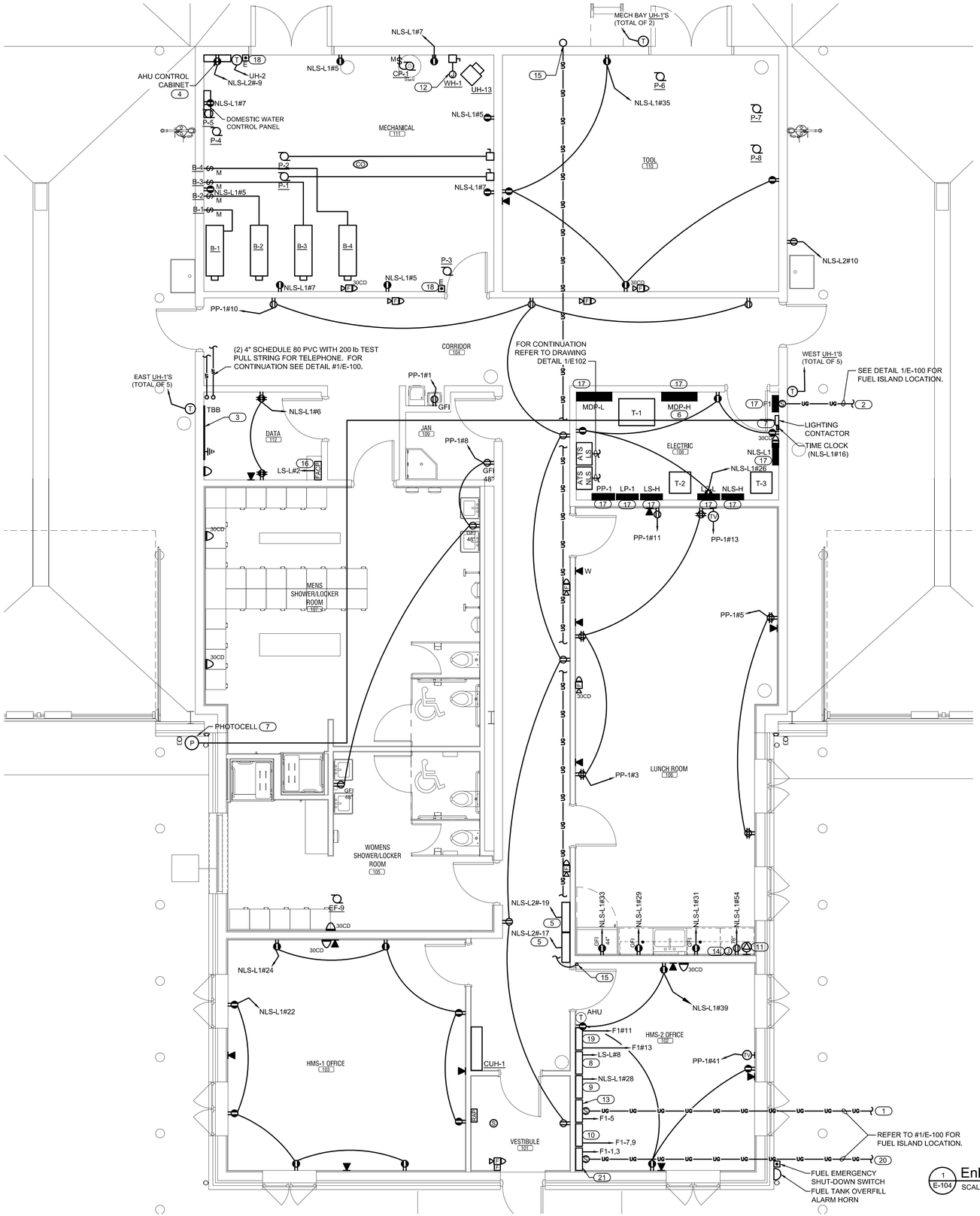

1 E-104 Enlarged Power & Systems Plan

SCALE: 1/4"=1'-0"

GENERAL NOTES:

A. ALL RACEWAYS IN VEHICLE STORAGE AREA(S) ARE EXPOSED. ALL OTHER RACEWAYS ARE CONCEALED.

B. EXTERIOR PERIMETER CONDUIT & CONDUCTORS SHALL BE CONCEALED IN WALLS. AT NO POINT SHALL CONDUITS BE MOUNTED EXPOSED ON THE EXTERIOR WALLS. IF CONDUITS CANNOT BE CONCEALED IN WALLS AT CERTAIN LOCATIONS, COORDINATE METHOD OF INSTALLATION WITH DIRECTOR'S REPRESENTATIVE.

C. COORDINATE LOCATIONS OF HVAC EQUIPMENT WITH HVAC CONTRACT.

D. COORDINATE LOCATIONS OF PLUMBING EQUIPMENT WITH PLUMBING CONTRACT.

E. COORDINATE LOCATIONS OF CIVIL EQUIPMENT WITH C CONTRACT.

F. COORDINATE CONDUIT INSTALLATION WITH RADIANT FLOOR HEAT SYSTEM.

G. SEE MECHANICAL EQUIPMENT FEEDER SCHEDULE (DRWG E-201) TO COORDINATE RESPONSIBILITIES BETWEEN EC, MC & PC.

H. ALL CONDUIT(S) DUCTBANK(S) NEED TO PASS THROUGH THE BUILDING FOUNDATION ABOVE THE TOP OF THE FOOTING @ 4'-0". REFER TO REINFORCING DETAIL #9/S301.

KEYED NOTES:

1. (4) SETS OF OF SEALED 3/4" C. (3) FOR FUTURE FUEL MANAGEMENT SYSTEM AND (1) FOR TANK PROBES & SENSORS. LOCATE IN OFFICE AS DIRECTED. REFER TO DWG E-405.
2. 2-#8 & 1-#8 GND IN 1" C. FOR DIESEL TANK HEATER. (F1-1,3)
   2-#10 & 1-#10 GND IN 3/4" C. FOR DIESEL PUMP DISPENSER #1. (F1-2)
   2-#10 & 1-#10 GND IN 3/4" C. DIESEL SUMP PUMP#1. (F1-4)
   2-#10 & 1-#10 GND IN 3/4" C. FOR FUEL ISLAND LIGHTING. (F1-6)
   2-#10 & 1-#10 GND IN 3/4" C. LEAK MONITORING. (F1-8)
   2-#10 & 1-#10 GND IN 3/4" C. CARD READER#1. (F1-10)
   2-#10 & 1-#10 GND IN 3/4" C. HEAT TRACE (F1-12)
   2-#10 & 1-#10 GND IN 3/4" C. CARD READER#2. (F1-14)
   2-#10 & 1-#10 GND IN 3/4" C. FOR DIESEL PUMP DISPENSER #2. (F1-16)
   2-#10 & 1-#10 GND IN 3/4" C. DIESEL SUMP PUMP#2. (F1-18)
3. SEE DETAIL #2/E-404 FOR TELEPHONE BACKBOARD GROUNDING. PROVIDE 4'X8' PLYWOOD BACKBOARD. SEE SPEC SECTION 273601.
4. AHU CONTROL CABINET PROVIDED BY HVAC CONTRACT. COORDINATE EXACT LOCATION WITH HVAC CONTRACTOR. PROVIDE DEDICATED DUPLEX RECEPTACLE.
5. CO, NO2 DETECTION, & EXHAUST CONTROL PANEL PROVIDED BY HVAC CONTRACT. PROVIDE ELECTRICAL CONNECTIONS TO CONTROL PANEL, EXHAUST FANS, MOTORIZED DAMPERS, & SENSORS. REFER TO DETAIL #1/M-201.
6. REFER TO DETAIL #2/E-401.
7. REFER TO DETAIL #1/E-401.
8. GRAP, GENERATOR REMOTE ANNUNCIATOR PANEL.
9. OIL/WATER SEPARATOR CONTROL PANEL BY C-CONTRACT. COORDINATE EXACT LOCATION WITH C-CONTRACTOR. PROVIDE ELECTRICAL CONNECTIONS.
10. FUEL TANK MONITORING PANEL BY C-CONTRACT. COORDINATE EXACT LOCATION WITH C-CONTRACTOR. PROVIDE ELECTRICAL CONNECTIONS.
11. PROVIDE 1" CONDUIT WITH PULLROPE FOR FUTURE EQUIPMENT. PROVIDE JUNCTION BOX AND BLANK COVERPLATE AT 18" AFF. PROVIDE 50A/2P CIRCUIT BREAKER IN PANEL NLS-L2 FOR FUTURE CONNECTION.
12. WATER HEATER WH-1 PROVIDED BY PLUMBING CONTRACT. COORDINATE EXACT LOCATION WITH PLUMBING CONTRACTOR. PROVIDE ELECTRICAL CONNECTIONS.
13. FUEL MANAGEMENT PANEL.
14. PROVIDE 3/4"CONDUIT WITH PULLROPE FOR FUTURE EQUIPMENT. PROVIDE JUNCTION BOX AND BLANK COVERPLATE AT 72" AFF. PROVIDE 20A/1P CIRCUIT BREAKER IN PANEL NLS-L2 FOR FUTURE CONNECTION.
15. PROVIDE A 2" EMPTY CONDUIT WITH PULL STRING INSTALLED UNDER SLAB FOR ANTENNAE SYSTEM. STUB UP 6" NEAR WALL AT EACH STUB UP LOCATION.
16. TIE FIRE ALARM SYSTEM INTO GAS DETECTION SYSTEM. PROVIDE A SUPERVISORY ALARM ON CO DETECTION.
17. REFER TO DETAIL #1/E-404.
18. REFER TO DETAIL #3/E-404.
19. FUEL TANK EMERGENCY SHUT-DOWN EQUIPMENT.
20. (1) SET OF OF SEALED 3/4" C FROM THE DIESEL TANK TO THE TANK HEATER CONTROL PANEL (BY CC). LOCATE IN OFFICE AS DIRECTED.
21. TANK HEATER CONTROL PANEL BY C-CONTRACT. PROVIDE ELECTRICAL CONNECTIONS.

NEW YORK STATE OF OPPORTUNITY. Office of General Services

DESIGN & CONSTRUCTION

CONSULTANT:

LaBella Powered by partnership.

MH PROFESSIONAL ENGINEERING, PLLC

WARNING:

THE ALTERATION OF THIS MATERIAL IN ANY WAY, UNLESS DONE UNDER THE DIRECTION OF A COMPARABLE PROFESSIONAL, I.E. ARCHITECT FOR AN ARCHITECT, ENGINEER FOR AN ENGINEER OR LANDSCAPE ARCHITECT FOR A LANDSCAPE ARCHITECT, IS A VIOLATION OF THE NEW YORK STATE EDUCATION LAW AND/OR REGULATIONS AND IS A CLASS 'A' MISDEMEANOR.

PROFESSIONAL ENGINEER MICHELLE M. HOUGHTALING 072116 STATE OF NEW YORK

CONTRACT:

ELECTRICAL

TITLE:

PROVIDE SUB-HEADQUARTERS BUILDING

LOCATION:

DOT REGION 8, DUTCHESS COUNTY
205 LIME KILN RD.
EAST FISHKILL, NEW YORK 12533

CLIENT:

NEW YORK STATE DEPARTMENT OF TRANSPORTATION

MARK	DATE	DESCRIPTION
	10/17/2019	BID DOCUMENTS

PROJECT NUMBER:	45552-E
DESIGNED BY:	AH
DRAWN BY:	JM
FIELD CHECK:	
APPROVED:	MH

SHEET TITLE:

ELECTRICAL ENLARGED PLANS

DRAWING NUMBER:

E-104

36x24 PLOT SHEET

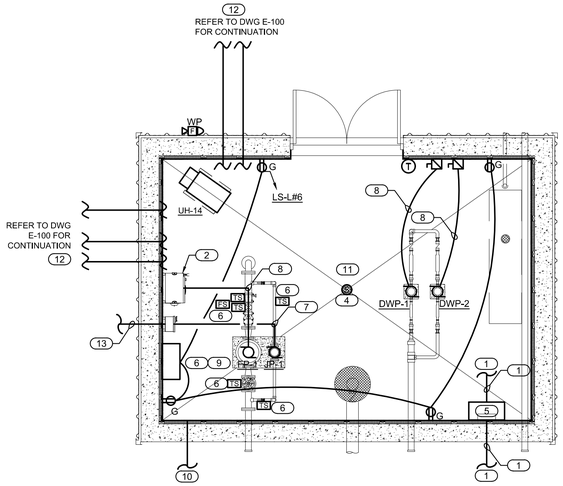

1 E-105 Pump House Power & Systems Plan
SCALE: 1/4"=1'-0"

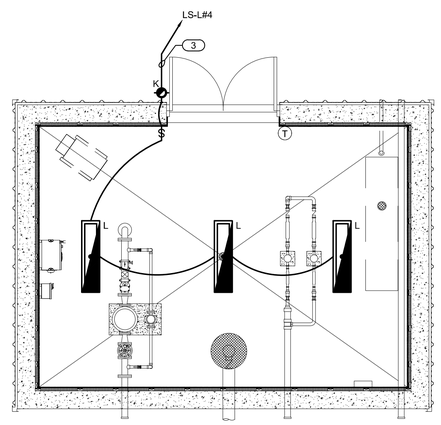

2 E-105 Pump House Lighting Plan
SCALE: 1/4"=1'-0"

GENERAL NOTES:

A. COORDINATE LOCATIONS OF HVAC EQUIPMENT WITH HVAC CONTRACT.

B. COORDINATE LOCATIONS OF PLUMBING EQUIPMENT WITH PLUMBING CONTRACT.

C. COORDINATE LOCATIONS OF CIVIL EQUIPMENT WITH C CONTRACT.

D. SEE MECHANICAL EQUIPMENT FEEDER SCHEDULE TO COORDINATE RESPONSIBILITIES BETWEEN EC, MC & PC.

E. REFER TO E-100 FOR ROUTING OF CONDUITS.

F. REFER TO KEYED NOTE #12 ON E-100 FOR NUMBER AND SIZE OF CONDUITS BETWEEN PUMP HOUSE AND MAIN BUILDING.

KEYED NOTES:

1. PROVIDE 1" CONDUIT WITH PULLROPE FROM TANK TO VENT FILTER. PROVIDE 1" CONDUIT FROM VENT FILTER TO LEVEL MONITORING INSIDE MECHANICAL ROOM-111. COORDINATE FINAL LOCATIONS OF EQUIPMENT WITH PC.
2. PROVIDE 1" CONDUIT FROM FP-1 CONTROLLER TO MAIN ELECTRICAL ROOM.
3. PROVIDE (2)#10, (1)#10G. IN 1" CONDUIT.
4. TIE DEVICE INTO FIRE ALARM DETECTION CONDUIT.
5. PROVIDE NEMA 3R ENCLOSURE FOR VENT FILTER. COORDINATE EXACT SIZE REQUIREMENTS WITH PC. COORDINATE EXACT MOUNTING LOCATION WITH PC.
6. TIE IN FIRE WATER TANK LOW/HIGH WATER LEVEL ALARM, TAMPER SWITCHES, FLOW SWITCHES, ETC. INTO FIRE ALARM NOTIFICATION CONDUIT.
7. PROVIDE (3)#12, (1)#12G. IN 3/4" CONDUIT.
8. PROVIDE (3)#10, (1)#10G. IN 1" CONDUIT.
9. PROVIDE NEMA 3R ENCLOSURE FOR FIRE WATER TANK LOW/HIGH WATER LEVEL ALARM. COORDINATE EXACT SIZE REQUIREMENTS AND MOUNTING LOCATION WITH PC.
10. PROVIDE 1" CONDUIT W / PULLROPE TO FIRE PROTECTION WATER TANK.
11. PROVIDE (2) 1" CONDUITS FOR FIRE ALARM DEVICES. (1) FOR NOTIFICATION AND (1) FOR DETECTION.
12. LIST OF CONDUITS:
    - 12.1. DWP-1 - 1"C.
    - 12.2. DWP-2 - 1"C.
    - 12.3. FP-1 - 1"C. (EM CIRCUIT)
    - 12.4. JP-1 - 3/4"C.
    - 12.5. UH-14 - 1"C.
    - 12.6. FIRE ALARM [NOTIFICATION] - 1"C.
    - 12.7. FIRE ALARM [DETECTION] - 1"C.
    - 12.8. LEVEL MONITORING - 1"C.
    - 12.9. ATS CONTROL WIRING - 1"C.
    - 12.10. LIGHT CIRCUIT - 1"C.
    - 12.11. FIRE PUMP MONITORING - 2" C
13. PROVIDE 3/4" CONDUIT FROM JP-1 CONTROLLER TO MAIN ELECTRICAL ROOM

NEW YORK STATE OF OPPORTUNITY. Office of General Services

DESIGN & CONSTRUCTION

CONSULTANT:

LaBella Powered by partnership.

MH PROFESSIONAL ENGINEERING, PLLC

WARNING:

THE ALTERATION OF THIS MATERIAL IN ANY WAY, UNLESS DONE UNDER THE DIRECTION OF A COMPARABLE PROFESSIONAL, I.E. ARCHITECT FOR AN ARCHITECT, ENGINEER FOR AN ENGINEER OR LANDSCAPE ARCHITECT FOR A LANDSCAPE ARCHITECT, IS A VIOLATION OF THE NEW YORK STATE EDUCATION LAW AND/OR REGULATIONS AND IS A CLASS 'A' MISDEMEANOR.

PROFESSIONAL ENGINEER MICHELLE M. HOUGHTALING 072116 STATE OF NEW YORK

CONTRACT: ELECTRICAL

TITLE: PROVIDE SUB-HEADQUARTERS BUILDING

LOCATION: DOT REGION 8, DUTCHESS COUNTY
205 LIME KILN RD.
EAST FISHKILL, NEW YORK 12533

CLIENT: NEW YORK STATE DEPARTMENT OF TRANSPORTATION

MARK	DATE	DESCRIPTION
	10/17/2019	BID DOCUMENTS

PROJECT NUMBER:	45552-E
DESIGNED BY:	AH
DRAWN BY:	JM
FIELD CHECK:	
APPROVED:	MH

SHEET TITLE: ELECTRICAL PUMP HOUSE PLANS

DRAWING NUMBER: E-105

36x24 PLOT SHEET

MECHANICAL EQUIPMENT FEEDER SCHEDULE

EQUIPMENT SERVED	EQUIPMENT TAG	LOAD				CONDUIT & CONDUCTORS	PANEL & CIRCUIT NUMBER	CIRCUIT BREAKER	DISCONNECTING MEANS (PROVIDED BY EC UON)	NOTES
		AMPS	HP/KW	PHASE	VOLTS	NUMBER & SIZE				
AIR COMPRESSOR		32.2	10 HP	3	200	1" WITH 3#6, 1#8	PP-1#26,28,30	60A/3P	PROVIDE 60-AMP, 3-POLE, 240V FUSED @ 60A, NEMA 1, DISCONNECT SWITCH	
AIR COOLED CONDENSING UNIT	ACCU-1	62	-	3	200	1 1/2" WITH 3#2, 1#8	PP-1#15,17,19	80A/3P	PROVIDED BY MC.	
AIR HANDLING UNIT	AHU-1	7	1.34HP	3	200	3/4" WITH 3#12, 1#12	PP-1#14,16,18	15A/3P	PROVIDE 30-AMP, 3-POLE, 240V NON-FUSED, NEMA 1, DISCONNECT SWITCH	NOTE #2
BOILER NO. 1	B-1	2.7	-	1	115	3/4" WITH 2#12, 1#12	NLS-L1#61	15A/1P	PROVIDE 30-AMP, 1-POLE, 240V NON-FUSED, NEMA 1, DISCONNECT SWITCH	
BOILER NO. 2	B-2	2.7	-	1	115	3/4" WITH 2#12, 1#12	NLS-L1#63	15A/1P	PROVIDE 30-AMP, 1-POLE, 240V NON-FUSED, NEMA 1, DISCONNECT SWITCH	
BOILER NO. 3	B-3	2.7	-	1	115	3/4" WITH 2#12, 1#12	NLS-L1#65	15A/1P	PROVIDE 30-AMP, 1-POLE, 240V NON-FUSED, NEMA 1, DISCONNECT SWITCH	
BOILER NO. 4	B-4	2.7	-	1	115	3/4" WITH 2#12, 1#12	NLS-L1#67	15A/1P	PROVIDE 30-AMP, 1-POLE, 240V NON-FUSED, NEMA 1, DISCONNECT SWITCH	
DHW RECIRC PUMP	CP-1	-	125 W	1	115	3/4" WITH 2#12, 1#12	NLS-L1#37	15A/1P	PROVIDE 30-AMP, 1-POLE, 240V NON-FUSED, NEMA 1, DISCONNECT SWITCH	
CABINET UNIT HEATER	CUH-1	0.2	0.03 HP	1	115	3/4" WITH 2#12, 1#12	NLS-L1#2	15A/1P	PROVIDED BY MC.	
EXHAUST FAN NO. 1	EF-1	9.6	3 HP	3	200	3/4" WITH 3#12, 1#12	NLS-L2#21,23,25	20A/3P	PROVIDED BY MC	NOTE #2
EXHAUST FAN NO. 2	EF-2	9.6	3 HP	3	200	3/4" WITH 3#12, 1#12	NLS-L2#18,20,22	20A/3P	PROVIDED BY MC	NOTE #2
EXHAUST FAN NO. 3	EF-3	9.6	3 HP	3	200	3/4" WITH 3#12, 1#12	NLS-L2#27,29,31	20A/3P	PROVIDED BY MC	NOTE #2
EXHAUST FAN NO. 4	EF-4	9.6	3 HP	3	200	3/4" WITH 3#12, 1#12	NLS-L2#24,26,28	20A/3P	PROVIDED BY MC	NOTE #2
EXHAUST FAN NO. 5	EF-5	9.6	3 HP	3	200	3/4" WITH 3#12, 1#12	NLS-L2#30,32,34	20A/3P	PROVIDED BY MC	NOTE #2
EXHAUST FAN NO. 6	EF-6	9.6	3 HP	3	200	3/4" WITH 3#12, 1#12	NLS-L2#36,38,40	20A/3P	PROVIDED BY MC	NOTE #2
EXHAUST FAN NO. 7	EF-7	9.6	3 HP	3	200	3/4" WITH 3#12, 1#12	NLS-L2#42,44,46	20A/3P	PROVIDED BY MC	NOTE #2
EXHAUST FAN NO. 8	EF-8	9.6	3 HP	3	200	3/4" WITH 3#12, 1#12	NLS-L2#48,50,52	20A/3P	PROVIDED BY MC	NOTE #2
EXHAUST FAN NO. 9	EF-9	2.2	1/8 HP	1	115	3/4" WITH 2#12, 1#12	NLS-L1#4	15A/3P	PROVIDED BY MC	
EXHAUST FAN NO. 10	EF-10	4.2	1 HP	3	200	3/4" WITH 3#12, 1#12	PP-1#38,40,42	15A/3P	PROVIDED BY MC	
EXHAUST FAN NO. 11	EF-11	3.7	1/8 HP	1	115	3/4" WITH 2#12, 1#12	NLS-L2#47	15A/1P	PROVIDED BY MC	
OVERHEAD DOOR NO. 1	OHD#1	-	-	1	115	3/4" WITH 3#12, 1#12	NLS-L1#8	20A/1P	PROVIDE 30-AMP, 1-POLE, 240V NON-FUSED, NEMA 1, DISCONNECT SWITCH	
OVERHEAD DOOR NO. 2	OHD#2	-	-	1	115	3/4" WITH 3#12, 1#12	NLS-L1#9	20A/1P	PROVIDE 30-AMP, 1-POLE, 240V NON-FUSED, NEMA 1, DISCONNECT SWITCH	
OVERHEAD DOOR NO. 3	OHD#3	-	-	1	115	3/4" WITH 3#12, 1#12	NLS-L1#10	20A/1P	PROVIDE 30-AMP, 1-POLE, 240V NON-FUSED, NEMA 1, DISCONNECT SWITCH	
OVERHEAD DOOR NO. 4	OHD#4	-	-	1	115	3/4" WITH 3#12, 1#12	NLS-L1#11	20A/1P	PROVIDE 30-AMP, 1-POLE, 240V NON-FUSED, NEMA 1, DISCONNECT SWITCH	
OVERHEAD DOOR NO. 5	OHD#5	-	-	1	115	3/4" WITH 3#12, 1#12	NLS-L1#12	20A/1P	PROVIDE 30-AMP, 1-POLE, 240V NON-FUSED, NEMA 1, DISCONNECT SWITCH	
OVERHEAD DOOR NO. 6	OHD#6	-	-	1	115	3/4" WITH 3#12, 1#12	NLS-L1#13	20A/1P	PROVIDE 30-AMP, 1-POLE, 240V NON-FUSED, NEMA 1, DISCONNECT SWITCH	
OVERHEAD DOOR NO. 7	OHD#7	-	-	1	115	3/4" WITH 3#12, 1#12	NLS-L1#14	20A/1P	PROVIDE 30-AMP, 1-POLE, 240V NON-FUSED, NEMA 1, DISCONNECT SWITCH	
OVERHEAD DOOR NO. 8	OHD#8	-	-	1	115	3/4" WITH 3#12, 1#12	NLS-L1#15	20A/1P	PROVIDE 30-AMP, 1-POLE, 240V NON-FUSED, NEMA 1, DISCONNECT SWITCH	
OVERHEAD DOOR NO. 9	OHD#9	-	-	1	115	3/4" WITH 3#12, 1#12	NLS-L1#17	20A/1P	PROVIDE 30-AMP, 1-POLE, 240V NON-FUSED, NEMA 1, DISCONNECT SWITCH	
OVERHEAD DOOR NO. 10	OHD#10	-	-	1	115	3/4" WITH 3#12, 1#12	NLS-L1#19	20A/1P	PROVIDE 30-AMP, 1-POLE, 240V NON-FUSED, NEMA 1, DISCONNECT SWITCH	
OVERHEAD DOOR NO. 11	OHD#11	-	-	1	115	3/4" WITH 3#12, 1#12	NLS-L1#21	20A/1P	PROVIDE 30-AMP, 1-POLE, 240V NON-FUSED, NEMA 1, DISCONNECT SWITCH	
OVERHEAD DOOR NO. 12	OHD#12	-	-	1	115	3/4" WITH 3#12, 1#12	NLS-L1#23	20A/1P	PROVIDE 30-AMP, 1-POLE, 240V NON-FUSED, NEMA 1, DISCONNECT SWITCH	
OVERHEAD DOOR NO. 13	OHD#13	-	-	1	115	3/4" WITH 3#12, 1#12	NLS-L1#25	20A/1P	PROVIDE 30-AMP, 1-POLE, 240V NON-FUSED, NEMA 1, DISCONNECT SWITCH	
OVERHEAD DOOR NO. 14	OHD#14	-	-	1	115	3/4" WITH 3#12, 1#12	NLS-L1#27	20A/1P	PROVIDE 30-AMP, 1-POLE, 240V NON-FUSED, NEMA 1, DISCONNECT SWITCH	
PRIMARY HWS PUMP	P-1	4.1	2.49HP	3	460	3/4" WITH 3#12, 1#12	NLS-H#31,33,35	15A/3P	INTEGRAL VFD & DISCONNECT PROVIDED BY MC	
PRIMARY HWS PUMP	P-2	4.1	2.49HP	3	460	3/4" WITH 3#12, 1#12	NLS-H#37,39,41	15A/3P	INTEGRAL VFD & DISCONNECT PROVIDED BY MC	
RADIANT ZONE 1	P-3	8.5	2/5HP	1	115	3/4" WITH 2#12, 1#12	NLS-L1#42	20A/1P	PROVIDE 30-AMP, 1-POLE, 240V NON-FUSED, NEMA 1, DISCONNECT SWITCH	
RADIANT ZONE 2	P-4	8.5	2/5HP	1	115	3/4" WITH 2#10, 1#10	NLS-L1#44	20A/1P	PROVIDE 30-AMP, 1-POLE, 240V NON-FUSED, NEMA 1, DISCONNECT SWITCH	
RADIANT ZONE 3	P-5	8.5	2/5HP	1	115	3/4" WITH 2#10, 1#10	NLS-L1#46	20A/1P	PROVIDE 30-AMP, 1-POLE, 240V NON-FUSED, NEMA 1, DISCONNECT SWITCH	
RADIANT ZONE 4	P-6	8.5	2/5HP	1	115	3/4" WITH 2#12, 1#12	NLS-L1#48	20A/1P	PROVIDE 30-AMP, 1-POLE, 240V NON-FUSED, NEMA 1, DISCONNECT SWITCH	
RADIANT ZONE 5	P-7	8.5	2/5HP	1	115	3/4" WITH 2#12, 1#12	NLS-L1#50	20A/1P	PROVIDE 30-AMP, 1-POLE, 240V NON-FUSED, NEMA 1, DISCONNECT SWITCH	
RADIANT ZONE 6	P-8	8.5	2/5HP	1	115	3/4" WITH 2#12, 1#12	NLS-L1#52	20A/1P	PROVIDE 30-AMP, 1-POLE, 240V NON-FUSED, NEMA 1, DISCONNECT SWITCH	
BOILER PUMPS	P-9	5.7	0.48 HP	1	200	3/4" WITH 2#12, 1#12	NLS-L2#49,51	15A/2P	INTEGRAL VFD PROVIDED BY MC. PROVIDE 30-AMP, 2-POLE, 240V NON-FUSED, NEMA 1, DISCONNECT SWITCH	NOTE #4
BOILER PUMPS	P-10	5.7	0.48 HP	1	200	3/4" WITH 2#12, 1#12	NLS-L2#53,55	15A/2P	INTEGRAL VFD PROVIDED BY MC. PROVIDE 30-AMP, 2-POLE, 240V NON-FUSED, NEMA 1, DISCONNECT SWITCH	NOTE #4
BOILER PUMPS	P-11	5.7	0.48 HP	1	200	3/4" WITH 2#12, 1#12	NLS-L2#57,59	15A/2P	INTEGRAL VFD PROVIDED BY MC. PROVIDE 30-AMP, 2-POLE, 240V NON-FUSED, NEMA 1, DISCONNECT SWITCH	NOTE #4
BOILER PUMPS	P-12	5.7	0.48 HP	1	200	3/4" WITH 2#12, 1#12	NLS-L2#61,63	15A/2P	INTEGRAL VFD PROVIDED BY MC. PROVIDE 30-AMP, 2-POLE, 240V NON-FUSED, NEMA 1, DISCONNECT SWITCH	NOTE #4
AHU RETURN FAN NO. 1	RF-1	4.6	<1 HP	3	200	3/4" WITH 3#12, 1#12	PP-1#20,22,24	15A/3P	PROVIDED BY MC	NOTES #2 & #3
UNIT HEATER NO. 1	UH-1	7.2	1/3 HP	1	115	3/4" WITH 2#12, 1#12	NLS-L1#45	15A/1P	PROVIDED BY MC	NOTE #1
UNIT HEATER NO. 2	UH-2	7.2	1/3 HP	1	115	3/4" WITH 2#12, 1#12	NLS-L1#49	15A/1P	PROVIDED BY MC	NOTE #1
UNIT HEATER NO. 3	UH-3	7.2	1/3 HP	1	115	3/4" WITH 2#12, 1#12	NLS-L1#43	15A/1P	PROVIDED BY MC	NOTE #1
UNIT HEATER NO. 4	UH-4	7.2	1/3 HP	1	115	3/4" WITH 2#12, 1#12	NLS-L1#51	15A/1P	PROVIDED BY MC	NOTE #1
UNIT HEATER NO. 5	UH-5	7.2	1/3 HP	1	115	3/4" WITH 2#12, 1#12	NLS-L1#41	15A/1P	PROVIDED BY MC	NOTE #1
UNIT HEATER NO. 6	UH-6	7.2	1/3 HP	1	115	3/4" WITH 2#12, 1#12	NLS-L1#53	15A/1P	PROVIDED BY MC	NOTE #1
UNIT HEATER NO. 7	UH-7	7.2	1/3 HP	1	115	3/4" WITH 2#12, 1#12	NLS-L1#55	15A/1P	PROVIDED BY MC	NOTE #1
UNIT HEATER NO. 8	UH-8	7.2	1/3 HP	1	115	3/4" WITH 2#12, 1#12	NLS-L1#57	15A/1P	PROVIDED BY MC	NOTE #1
UNIT HEATER NO. 9	UH-9	7.2	1/3 HP	1	115	3/4" WITH 2#12, 1#12	NLS-L1#60	15A/1P	PROVIDED BY MC	NOTE #1
UNIT HEATER NO. 10	UH-10	7.2	1/3 HP	1	115	3/4" WITH 2#12, 1#12	NLS-L1#59	15A/1P	PROVIDED BY MC	NOTE #1
UNIT HEATER NO. 11	UH-11	7.2	1/3 HP	1	115	3/4" WITH 2#12, 1#12	NLS-L1#58	15A/1P	PROVIDED BY MC	NOTE #1
UNIT HEATER NO. 12	UH-12	7.2	1/3 HP	1	115	3/4" WITH 2#12, 1#12	NLS-L1#56	15A/1P	PROVIDED BY MC	NOTE #1
UNIT HEATER NO. 13	UH-13	24	5KW-1/40HP	1	208	3/4" WITH 2#12, 1#12	NLS-L1#62,64	30A/2P	PROVIDED BY MC	NOTE #1
UNIT HEATER NO. 14	UH-14	24	5KW-1/40HP	1	208	1" WITH 2#6, 1#6	NLS-L1#66,68	30A/2P	PROVIDED BY MC	NOTE #1
WATER HEATER	WH-1	5	-	1	120	3/4" WITH 2#12, 1#12	NLS-L2#43	10A/1P	PROVIDE 30-AMP, 1-POLE, 240V FUSED @ 10A, NEMA 1, DISCONNECT SWITCH	
TANKLESS HW HEATER	WH-2	4	-	1	120	3/4" WITH 2#12, 1#12	NLS-L2#45	10A/1P	PROVIDE 30-AMP, 1-POLE, 240V FUSED @ 10A, NEMA 1, DISCONNECT SWITCH	
TANKLESS HW HEATER	WH-3	4	-	1	120	3/4" WITH 2#12, 1#12	NLS-L2#47	10A/1P	PROVIDE 30-AMP, 1-POLE, 240V FUSED @ 10A, NEMA 1, DISCONNECT SWITCH	
FIRE PUMP	FP-1	27	20 HP	3	460	1" WITH 3#10, 1#10	LS-H#7,9,11	60A/3P	PROVIDE 60-AMP, 3-POLE, 480V FUSED @ 60A, NEMA 1, DISCONNECT SWITCH	
JOCKEY PUMP	JP-1	2.8	3/4 HP	3	200	3/4" WITH 3#12, 1#12	LS-L#7,9,11	15A/3P	PROVIDE 30-AMP, 3-POLE, 240V FUSED @ 10A, NEMA 1, DISCONNECT SWITCH	
DOMESTIC WATER PUMP	DWP-1	2.8	3 HP	3	460	1" WITH 3#10, 1#10	NLS-H#7,9,11	15A/3P	PROVIDE 30-AMP, 3-POLE, 480V FUSED @ 10A, NEMA 1, DISCONNECT SWITCH	
DOMESTIC WATER PUMP	DWP-2	2.8	3 HP	3	460	1" WITH 3#10, 1#10	NLS-H#13,15,17	15A/3P	PROVIDE 30-AMP, 3-POLE, 480V FUSED @ 10A, NEMA 1, DISCONNECT SWITCH	
GRINDER PUMP	GP-1	2.8	3 HP	3	460	1" WITH 3#10, 1#10	NLS-H#19,21,23	15A/3P	PROVIDE 30-AMP, 3-POLE, 480V FUSED @ 10A, NEMA 1, DISCONNECT SWITCH	
GRINDER PUMP	GP-2	2.8	3 HP	3	460	1" WITH 3#10, 1#10	NLS-H#25,27,29	15A/3P	PROVIDE 30-AMP, 3-POLE, 480V FUSED @ 10A, NEMA 1, DISCONNECT SWITCH	
EFFLUENT DOSING PUMP	EDP-1	9.8	1/2 HP	1	115	1" WITH 2#10, 1#10	NLS-L1#69	20A/1P	PROVIDE 30-AMP, 1-POLE, 240V FUSED @ 10A, NEMA 3R, DISCONNECT SWITCH	NOTE #5
EFFLUENT DOSING PUMP	EDP-2	9.8	1/2 HP	1	115					
VEHICLE EXHAUST SYSTEM	-	4.8	-	3	208	3/4" WITH 3#10, 1#10	PP-1#25,27,29	20A/3P	PROVIDE 30-AMP, 3-POLE, 240V NON-FUSED, NEMA 1, DISCONNECT SWITCH	

EQUIPMENT SCHEDULE NOTES:
1. THERMOSTAT IS LINE VOLTAGE.
2. ON SIGNAL FROM BUILDING FIRE ALARM SYSTEM, UNIT SHALL STOP. THE UNIT SHALL AUTOMATICALLY RESTART WHEN THE FIRE ALARM SIGNAL IS CLEARED.
3. INTERLOCK WITH AHU-1.
4. MC TO FURNISH. EC TO INSTALL.
5. PUMPS SHALL OPERATE LEAD/LAG.

NEW YORK STATE OF OPPORTUNITY. Office of General Services

DESIGN & CONSTRUCTION

CONSULTANT:

LaBella Powered by partnership.

MH PROFESSIONAL ENGINEERING, PLLC

WARNING:
THE ALTERATION OF THIS MATERIAL IN ANY WAY, UNLESS DONE UNDER THE DIRECTION OF A COMPARABLE PROFESSIONAL, I.E. ARCHITECT FOR AN ARCHITECT, ENGINEER FOR AN ENGINEER OR LANDSCAPE ARCHITECT FOR A LANDSCAPE ARCHITECT, IS A VIOLATION OF THE NEW YORK STATE EDUCATION LAW AND/OR REGULATIONS AND IS A CLASS 'A' MISDEMEANOR.

PROFESSIONAL ENGINEER MICHELLE M. HOUGHTALING 072116 STATE OF NEW YORK

CONTRACT: ELECTRICAL

TITLE: PROVIDE SUB-HEADQUARTERS BUILDING

LOCATION: DOT REGION 8, DUTCHESS COUNTY
205 LIME KILN RD.
EAST FISHKILL, NEW YORK 12533

CLIENT: NEW YORK STATE DEPARTMENT OF TRANSPORTATION

MARK	DATE	DESCRIPTION
	10/17/2019	BID DOCUMENTS

PROJECT NUMBER: 45552-E

DESIGNED BY: AH

DRAWN BY: JM

FIELD CHECK:

APPROVED: MH

SHEET TITLE: EQUIPMENT SCHEDULE

DRAWING NUMBER: E-201

36x24 PLOT SHEET

SPACE TYPE	MANUAL ON	MANUAL OFF	DIMMING SWITCH	PHOTOCELL DIMMING	MULTI ZONE SWITCH	KEY SWITCH	PHOTOCELL ON	TIME CLOCK OFF	OCCUPANCY SENSOR ON	OCCUPANCY SENSOR OFF
Exterior Lights							X	X		
Office	X	X	X							X
Toilet/Locker Rooms	X	X							X	X
Garage Bays	X	X								
Corridor	X	X								
Tool Room	X	X								X
Data Room	X	X								X
Storage Room	X	X								X
Electrical/Mechanical Room	X	X								
Storage Closets/Jan	X	X								X
Lunch Room	X	X	X	X						X

1 E-202 Lighting Control Matrix
SCALE: 1/4"=1'-0"

LUMINAIRE SCHEDULE

TYPE	DESCRIPTION	COLOR TEMP / LUMENS	LAMP	VOLTAGE	MOUNTING	BASIS OF DESIGN
A	LED HIGH BAY. CHANNEL AND END CAPS ARE FABRICATED FROM STEEL. LIGHTWEIGHT ALUMINUM HEAT SINK. GENERAL DISTRIBUTION WITH POLYCARBONATE LENS. 0-10V DIMMING. DAMP LOCATION LISTED.	LED 11,746 LM 4000K 70W	LED DRIVER	120V	PENDANT MTD @ 22'-0"	LITHONIA LIGHITNG MODEL: IBG-12000LM-HEF-PCL-GND-MVOLT-GZ10-40K-80CRI-DWH
B	RECESSED 2x4 LED TROFFER. HOUSING IS GLOSS WHITE ENAMEL ON COLD-ROLLED STEEL. MATTE WHITE POLYESTER PAINT FINISHED REFLECTORS, METAL DIFFUSER WITH ROUND HOLES. 0-10V DIMMING.	LED 3,380 LM 4000K 38W	LED DRIVER	120V	RECESSED	LITHONIA LIGHITNG MODEL: 2AVL4-30L-MDR-GZ10-LP840
C	LED STRIP LIGHT. TANDUM SURFACE MOUNTED. CHANNEL AND COVER ARE FORMED FROM CODE-GAUGE COLD-ROLLED STEEL. FINISH IS A HIGH-GLOSS, BAKED MATTE BLACK ENAMEL. STANDARD DIFFUSE SNAP ON/OFF LENS. MOUNT AT 45 DEGREES. PROVIDE FEED THRU WIRING AS REQUIRED.	LED 4,028 LM 4000K 30W	LED DRIVER	120V	SURFACE 12'-0" A.F.F.	LITHONIA LIGHITNG MODEL: ZL1D-L48-3000LM-FST-MVOLT-40K-80CRI-MB
D	LED STRIP LIGHT. CHANNEL AND COVER ARE FORMED FROM CODE-GAUGE COLD-ROLLED STEEL. FINISH IS A HIGH-GLOSS, BAKED WHITE ENAMEL. STANDARD DIFFUSE SNAP ON/OFF LENS. MEDIUM DIFFUSE DIFFUSER.	LED 2,730 LM 4000K 30W	LED DRIVER	120V	SURFACE 10'-0" A.F.F.	LITHONIA LIGHITNG MODEL: ZL1F-L48-3000LM-MDD-MVOLT-40K-80CRI-WH
E	SURFACE MOUNT LED WALL PACK. CAST-ALUMINUM HOUSING WITH POLYESTER POWDER COAT FINISH. TRANSLUCENT ACRYLIC LENS. LENS SEALED TO THE HOUSING WITH A ONE-PIECE GASKET. UL LISED FOR WET LOCATIONS. UL LISTED FOR WET LOCATIONS.	LED 3,500 LM 4000K 27W	LED DRIVER	120V	SURFACE	LITHONIA LIGHITNG MODEL: CNY-LED-PO-40K-MVOLT-DDB
F	6" OPEN RECESSED DOWNLIGHT. GALVANIZED STEEL FRAME AND JUNCTION BOX. LED LIGHT SOURCE CONCEALED WITH DIFFUSING OPTICAL LENS. SELF-FLANGED ANODIZED REFLECTORS IN MATTE DIFFUSE WITH CLEAR TRIM. 0-10V DIMMING DRIVER TO 10%. DAMP LOCATION LISTED. ENERGY STAR QUALIFIED.	LED 1,399 LM 4000K 20.5W	LED DRIVER	120V	RECESSED	LITHONIA LIGHITNG MODEL: LDN6-40/15-L06AR-LD-MVOLT-GZ10
H	LED WALL PACK. TWO-PIECE DIE-CAST ALUMINUM HOUSING. THE LED DRIVER IS MOUNTED TO THE DOOR TO THERMALLY ISOLATE IT FROM THE LIGHT ENGINES FOR LOW OPERATING TEMPERATURE AND LONG LIFE. HOUSING IS COMPLETELY SEALED AGAINST MOISTURE AND ENVIRONMENTAL CONTAMINANTS. (IP65) EXTERIOR PARTS ARE PROTECTED BY A ZINC-INFUSED SUPER DURABLE TGIC THERMOSET POWDER COAT FINISH THAT PROVIDES SUPERIOR RESISTANCE TO CORROSION AND WEATHERING. OPTICS ARE A PRECISION-MOLDED ACRYLIC LENS.	LED 11,280 LM 4000K 109W	LED DRIVER	120V	SURFACE 12'-0" A.F.F.	LITHONIA LIGHITNG MODEL: DSXW2 LED-30C-1000-40K-T3M-MVOLT-XX-DDBXD
J	ROUGH SERVICE LED FIXTURE. UV-STABLIZED, INJECTION-MOLDED, IMPACT-RESISTANT, FROSTED POLYCARBONATE HOUSING WITH CONTINUOUS POURED IN PLACE, CLOSED-CELL GASKET. 20-GAUGE STEEL CHANNEL AND CHANNEL COVER. ALUMINUM SHEET METAL BOARD PLATE FOR THERMAL CONDUCTION AND SUPPORT. UV-STABLIZED, INJECTION-MOLDED, IMPACT-RESISTANT, CLEAR TRANSPARENT POLYCARBONATE LENS WITH AESTHETIC RIB DETAIL. WET LOCATION LISTED. (IP65 & IP66)	LED 12,350 LM 4000K 99W	LED DRIVER	120V	PENDANT MTD @ 15'-0"	LITHONIA LIGHITNG MODEL: VAP-12000LM-PCL-MD-MVOLT-GZ10-40K-80CRI
J1	SAME AS "J" BUT MOUNT AT 45 DEGREES. PROVIDE FEED THRU WIRING AS REQUIRED.	LED 12,350 LM 4000K 99W	LED DRIVER	120V	SURFACE 12'-0" A.F.F.	LITHONIA LIGHITNG MODEL: VAP-12000LM-PCL-MD-MVOLT-GZ10-40K-80CRI
K	ARCHITECTURAL ROUGH SERVICE LED FIXTURE. ONE-PIECE, MARINE GRADE DIE-CAST ALUMINUM, LOW-COPPER ALLOY. POST-PAINTED POLYESTER POWDER COAT FINISH. GASKET - POLYCARBONATE: PERIMETER LENS GASKET IS ONE-PIECE SILICONE "O" RING, MECHANICALLY HELD IN LENS CHANNEL. OPTICS WITH POLYCARBONATE LENS - INJECTION-MOLDED LENS IS 0.125 INCHES THICK. UL LISTED FOR WET LOCATIONS. (IP65)	LED 940 LM 4100K 40W	LED DRIVER	120V	SURFACE 8'-0" A.F.F.	LITHONIA LIGHITNG MODEL: VGR2C-40LED-4100K-MVOLT-DDBT-LPI
L	ROUGH SERVICE LED FIXTURE. UV-STABLIZED, INJECTION-MOLDED, IMPACT-RESISTANT, FROSTED POLYCARBONATE HOUSING WITH CONTINUOUS POURED IN PLACE, CLOSED-CELL GASKET. 20-GAUGE STEEL CHANNEL AND CHANNEL COVER. ALUMINUM SHEET METAL BOARD PLATE FOR THERMAL CONDUCTION AND SUPPORT. UV-STABLIZED, INJECTION-MOLDED, IMPACT-RESISTANT, CLEAR TRANSPARENT POLYCARBONATE LENS WITH AESTHETIC RIB DETAIL. WET LOCATION LISTED. (IP65 & IP66)	LED 4,517 LM 4200K 33W	LED DRIVER	120V	SURFACE	LITHONIA LIGHITNG MODEL: VAP-4000LM-PCL-MD-MVOLT-GZ10-40K-80CRI
PLL-1	AREA LED LIGHT. SINGLE HEAD, SINGLE-PIECE, DIE-CAST ALUMINUM HOUSING. EXTERIOR PARTS ARE PROTECTED BY A ZINC-INFUSED SUPER DURABLE TGIC THERMOSET POWDER COAT FINISH THAT PROVIDES SUPERIOR RESISTANCE TO CORROSION AND WEATHERING. DARK BRONZE. OPTICS ARE A PRECISION-MOLDED ACRYLIC LENS. P3 LIGHT ENGINE AND T4M DISTRIBUTION.	LED 12,309 LM 4000K 102W	LED DRIVER	120V	POLE	LITHONIA LIGHITNG MODEL: DSX1 LED-P3-40K-T4M-MVOLT-DM19AS-DDBXD
PLL-1 POLE	20'-0" ROUND TAPERED ALUMINIM POLE. ONE-PIECE EXTRUDED ALUMINUM ALLOY IN 5" DIAMETER. CAST ALUMINUM TOP CAP. 2"X4" HANDHOLE WITH OVERLAP COVER. ONE-PIECE SPUN ALUMINUM BASE COVER. ALL FASTENERS ARE STAINLESS STEEL. DARK BRONZE FINISH. 4-ANCHOR BOLT BASE - AB18-0	N/A	N/A	N/A	20'-0" POLE	LITHONIA LIGHITNG MODEL: 3RTA-20-5C-DM19AS-AB18-0-DDBXD
PLL-2	AREA LED LIGHT. DOUBLE HEAD, 180 DEGREES, SINGLE-PIECE, DIE-CAST ALUMINUM HOUSING. EXTERIOR PARTS ARE PROTECTED BY A ZINC-INFUSED SUPER DURABLE TGIC THERMOSET POWDER COAT FINISH THAT PROVIDES SUPERIOR RESISTANCE TO CORROSION AND WEATHERING. DARK BRONZE. OPTICS ARE A PRECISION-MOLDED ACRYLIC LENS. P3 LIGHT ENGINE AND T4M DISTRIBUTION.	LED 24,618 LM 4000K 204W	LED DRIVER	120V	POLE	LITHONIA LIGHITNG MODEL: DSX1 LED-P3-40K-T4M-MVOLT-DM28AS-DDBXD
PLL-2 POLE	20'-0" ROUND TAPERED ALUMINIM POLE. ONE-PIECE EXTRUDED ALUMINUM ALLOY IN 5" DIAMETER. 90 DEGREE WITH 2-HEADS. CAST ALUMINUM TOP CAP. 2"X4" HANDHOLE WITH OVERLAP COVER. ONE-PIECE SPUN ALUMINUM BASE COVER. ALL FASTENERS ARE STAINLESS STEEL. DARK BRONZE FINISH. 4-ANCHOR BOLT BASE - AB18-0	N/A	N/A	N/A	20'-0" POLE	LITHONIA LIGHTING MODEL: 3RTA-20-5C-DM29AS-AB18-0-DDBXD
EX1	SINGLE FACE LED EXIT SIGN. DURABLE CAST ALUMINUM CONSTRUCTION, RUGGED, LOW-PROFILE HOUSING IS 0.25 TO 0.525 INCHES THICK. CLEAR, UV-STABLE POLYCARBONATE COVER IS 0.13 INCHES THICK TO PREVENT CRACKING OR BREAKING. POLYCARBONATE FACEPLATE INCORPORATES UNIVERSAL DIRECTIONAL CHEVRON KNOCKOUTS THAT ARE CONCEALED AND EASILY REMOVED AND REPLACED. LETTERS 6 INCHES HIGH WITH 3/4 INCH STROKE, WITH 100FT VIEWING DISTANCE RATING, BASED UPON UL924 STANDARDS.	2.3W	LED DRIVER	120V	SURFACE	LITHONIA LIGHITNG MODEL: LV-S-1-R-120/277
EX2	DOUBLE FACE LED EXIT SIGN. DURABLE CAST ALUMINUM CONSTRUCTION, RUGGED, LOW-PROFILE HOUSING IS 0.25 TO 0.525 INCHES THICK. CLEAR, UV-STABLE POLYCARBONATE COVER IS 0.13 INCHES THICK TO PREVENT CRACKING OR BREAKING. POLYCARBONATE FACEPLATE INCORPORATES UNIVERSAL DIRECTIONAL CHEVRON KNOCKOUTS THAT ARE CONCEALED AND EASILY REMOVED AND REPLACED. LETTERS 6 INCHES HIGH WITH 3/4 INCH STROKE, WITH 100FT VIEWING DISTANCE RATING, BASED UPON UL924 STANDARDS.	2.3W	LED DRIVER	120V	SURFACE	LITHONIA LIGHITNG MODEL: LV-S-2-R-120/277-UM
EX3	WET LOCATION LED EXIT SIGN. WHITE, COMPACT, CONTEMPORARY DESIGN. ENGINEERING-GRADE THERMOPLASTIC HOUSING IS IMPACT-RESISTANT, SCRATCH-RESISTANT AND CORROSION-PROOF. UNVERSAL DIRECTIONAL CHEVRON INSERTS ARE EASILY REMOVED AND REINSERTED. UL94V-0 FLAME RATING. UV-STABLE RESIN RESISTS DISCOLORATION FROM NATURAL AND MAN-MADE LIGHT SOURCES. RUGGED, HEAVY-DUTY, POLYCARBONATE CLEAR HOUSING LENS. LETTERS 6 INCHES HIGH WITH 3/4 INCH STROKE, WITH 100FT VIEWING DISTANCE RATING, BASED UPON UL924 STANDARDS.	2.7W	LED DRIVER	120V	SURFACE	LITHONIA LIGHITNG MODEL: WLTE-W-1-R

2 E-202 Luminaire Schedule
SCALE: 1/4"=1'-0"

36x24 PLOT SHEET

NEW YORK STATE OF OPPORTUNITY. Office of General Services
DESIGN & CONSTRUCTION

CONSULTANT:

LaBella Powered by partnership.

MH PROFESSIONAL ENGINEERING, PLLC

WARNING:
THE ALTERATION OF THIS MATERIAL IN ANY WAY, UNLESS DONE UNDER THE DIRECTION OF A COMPARABLE PROFESSIONAL, I.E. ARCHITECT FOR AN ARCHITECT, ENGINEER FOR AN ENGINEER OR LANDSCAPE ARCHITECT FOR A LANDSCAPE ARCHITECT, IS A VIOLATION OF THE NEW YORK STATE EDUCATION LAW AND/OR REGULATIONS AND IS A CLASS 'A' MISDEMEANOR.

PROFESSIONAL ENGINEER MICHELLE M. HOUGHTALING 072116 STATE OF NEW YORK

CONTRACT: ELECTRICAL

TITLE: PROVIDE SUB-HEADQUARTERS BUILDING

LOCATION: DOT REGION 8, DUTCHESS COUNTY
205 LIME KILN RD.
EAST FISHKILL, NEW YORK 12533

CLIENT: NEW YORK STATE DEPARTMENT OF TRANSPORTATION

MARK	DATE	DESCRIPTION
	10/17/2019	BID DOCUMENTS

PROJECT NUMBER: 45552-E

DESIGNED BY: AH
DRAWN BY: JM
FIELD CHECK:
APPROVED: MH

SHEET TITLE: LUMINAIRE & CONTROL SCHEDULE

DRAWING NUMBER: E-202

36x24 PLOT SHEET

PANELBOARD SCHEDULE

NOTES: PANEL SHALL BE FULLY RATED.

PANEL	SOURCE	RATINGS (AMPS)		PHASE/ WIRE	VOLTAGE	MOUNTING	UL LISTING INT. RATING (RMS SYM. AMPS)	DESIGN MAKE SQ-D	NEMA TYPE
NLS-L1	NLS-H 75KVA	MCB 250A	MLO -	3PH 4W	208/120	SURFACE	22 KAIC	NQ472L4C	1

CKT NO.	DESCRIPTION	BREAKER	MISC	RCPT	MOTOR	HTG	HTG	MOTOR	RCPT	MISC	BREAKER	DESCRIPTION	CKT NO.
			VA LOAD				VA LOAD						
1	SITE LIGHT POLES	20A/1P	510.0				23.0				15A/1P	CUH-1 [0.03 HP]	2
3	SITE LIGHT POLES	20A/1P	408.0					253.0			15A/1P	EF-9	4
5	111-RCPTS	20A/1P		720.0					720.0		20A/1P	112- RCPTS	6
7	DOMESTIC WATER CONTROL PANEL, RCPTS MECH RM-111	20A/1P		720.0				1127.0			20A/1P	OVERHEAD DOOR#1 [1/2 HP]	8
9	OVERHEAD DOOR#2 [1/2 HP]	20A/1P			1127.0			1127.0			20A/1P	OVERHEAD DOOR#3 [1/2 HP]	10
11	OVERHEAD DOOR#4 [1/2 HP]	20A/1P			1127.0			1127.0			20A/1P	OVERHEAD DOOR#5 [1/2 HP]	12
13	OVERHEAD DOOR#6 [1/2 HP]	20A/1P			1127.0			1127.0			20A/1P	OVERHEAD DOOR#7 [1/2 HP]	14
15	OVERHEAD DOOR#8 [1/2 HP]	20A/1P			1127.0					1920.0	20A/1P	LIGHTING TIME CLOCK	16
17	OVERHEAD DOOR#9 [1/2 HP]	20A/1P			1127.0				8320.0		50A/2P	WELDER RCPT [SW OFFICE WALL]	18
19	OVERHEAD DOOR#10 [1/2 HP]	20A/1P			1127.0								20
21	OVERHEAD DOOR#11 [1/2 HP]	20A/1P			1127.0				720.0		20A/1P	103-RCPTS	22
23	OVERHEAD DOOR#12 [1/2 HP]	20A/1P			1127.0				720.0		20A/1P	103-RCPTS	24
25	OVERHEAD DOOR#13 [1/2 HP]	20A/1P			1127.0				720.0		20A/1P	108-RCPTS	26
27	OVERHEAD DOOR#14 [1/2 HP]	20A/1P			1127.0					250.0	20A/1P	OIL/WATER SPRTOR PNL	28
29	106-COUNTER RCPT	20A/1P		1500.0									30
31	106-COUNTER RCPT	20A/1P		1500.0							15A/3P	SPARE	32
33	106-REFIDGERATOR	20A/1P		800.0									34
35	110-RCPTS	20A/1P		720.0									36
37	CP-1 RECIRC PUMP	15A/1P			125.0						15A/3P	SPARE	38
39	102-RCPTS	20A/1P		720.0									40
41	UH-5	15A/1P			828.0		977.5				20A/1P	P-3	42
43	UH-3	15A/1P			828.0		977.5				20A/1P	P-4	44
45	UH-1	15A/1P			828.0		977.5				20A/1P	P-5	46
47	EF-11 [1/8 HP]	15A/1P			253.0		977.5				20A/1P	P-6	48
49	UH-2	15A/1P			828.0		977.5				20A/1P	P-7	50
51	UH-4	15A/1P			828.0		977.5				20A/1P	P-8	52
53	UH-6	15A/1P			828.0				1800.0		20A/1P	106-MICROWAVE	54
55	UH-7	15A/1P			828.0			828.0			15A/1P	UH-12	56
57	UH-8	15A/1P			828.0			828.0			15A/1P	UH-11	58
59	UH-10	15A/1P			828.0			828.0			15A/1P	UH-9	60
61	B-1	15A/1P				324.0	4992.0				30A/2P	UH-13	62
63	B-2	15A/1P				324.0							64
65	B-3	15A/1P				324.0	4992.0				30A/2P	UH-14	66
67	B-4	15A/1P				324.0							68
69	SEPTIC EFFLUENT PUMPS [1/2 HP EACH]	20A/1P			1127.0				8320.0		50A/2P	WELDER RCPT [TOOL ROOM WALL]	70
71	RCPTS-WELDING BENCH	20A/1P		720.0									72

	MISC	RCPT	MOTOR	HTG	HTG	MOTOR	RCPT	MISC	
LEFT SIDE SUB-TOTAL	918.0	7400.0	20227.0	1296.0	15872.0	7245.0	21320.0	2170.0	RIGHT SIDE SUB-TOTAL
TOTAL CONNECTED LOAD	3088.0	28720.0	27472.0	17168.0	A PHASE	B PHASE	C PHASE	TOTAL CONNECTED LOAD PER PHASE	
DEMAND FACTOR	1.0	10k,50%	0.8	0.8					
ESTIMATED DEMAND	3088.0	19360.0	21977.6	13734.4					
TOTAL ESTIMATED DEMAND (VA)		58160.00							
TOTAL AMPS		161.44							

NOTES: 1. - PROVIDE FEED THRU LUGS TO CONNECT PANEL NLS-L2. 2. - COORDINATE WITH MECH. CONTRACTOR FOR CB SIZE WITH MAX ALLOWED BY SELECTED EQUIP. MANUFACTURER.

PANELBOARD SCHEDULE

NOTES: PANEL SHALL BE FULLY RATED.

PANEL	SOURCE	RATINGS (AMPS)		PHASE/ WIRE	VOLTAGE	MOUNTING	UL LISTING INT. RATING (RMS SYM. AMPS)	DESIGN MAKE SQ-D	NEMA TYPE
NLS-L2	NLS-H 75KVA	MCB 250A	MLO -	3PH 4W	208/120	SURFACE	22 KAIC	NQ472L4C	1

CKT NO.	DESCRIPTION	BREAKER	MISC	RCPT	MOTOR	HTG	HTG	MOTOR	RCPT	MISC	BREAKER	DESCRIPTION	CKT NO.
			VA LOAD				VA LOAD						
1	SPARE	20A/1P											2
3	SPARE	20A/1P					2880.0	2000.0	0.0	11992.0	60A/3P	F1 SUB PANEL	4
5	SE GARAGE RCPTS	20A/1P		540.0									6
7	NE GARAGE RCPT	20A/1P		540.0						985.6	20A/1P	EXTERIOR GARAGE LTG	8
9	AHU CONTROL CABINET	20A/1P	500.0						1920.0		20A/1P	ICE MAKER	10
11	N GARAGE RCPTS	20A/1P		540.0						667.8	20A/1P	EXTERIOR GARAGE LTG	12
13	NW GARAGE RCPTS	20A/1P		360.0							20A/1P	SPARE	14
15	VENT CNTRL BOX	20A/1P	500.0								20A/1P	SPARE	16
17	GAS CONTROL PANEL	20A/1P	500.0										18
19	GAS CONTROL PANEL	20A/1P	500.0					3325.5			20A/3P	EF-2 [3 HP], NOTE 1	20
21													22
23	EF-1 [3 HP], NOTE 1	20A/3P			3325.5								24
25								3325.5			20A/3P	EF-4 [3 HP], NOTE 1	26
27													28
29	EF-3 [3 HP], NOTE 1	20A/3P			3325.5								30
31								3325.5			20A/3P	EF-5 [3 HP], NOTE 1	32
33	SW GARAGE RCPTS	20A/1P		540.0									34
35	EF-1-EF-4 DAMPERS	20A/1P	500.0										36
37	RECEPTACLES	20A/1P		900.0				3325.5			20A/3P	EF-6 [3 HP], NOTE 1	38
39	EF-5-EF-8 DAMPERS	20A/1P	500.0										40
41	MEZZANINE DAMPERS	20A/1P	500.0										42
43	WH-1	10A/1P				600.0		3325.5			20A/3P	EF-7 [3 HP], NOTE 1	44
45	WH-2	10A/1P				480.0							46
47	WH-3	10A/1P				480.0							48
49	P-9	15A/2P			1140.0			3325.5			20A/3P	EF-8 [3 HP], NOTE 1	50
51													52
53	P-10	15A/2P			1140.0		4160.0				50A/2P	FUTURE EQUIP	54
55												106-LUNCH RM	56
57	P-11	15A/2P			1140.0			500.0			20A/1P	FUTURE EQUIP LUNCH RM	58
59											20A/1P	SPARE	60
61	P-12	15A/2P			1140.0						20A/1P	SPARE	62
63											20A/1P	SPARE	64
65	SPARE	20A/1P									20A/1P	SPARE	66
67	SPARE	20A/1P									20A/1P	SPARE	68
69	SPARE	20A/1P									20A/1P	SPARE	70
71	SPARE	20A/1P									20A/1P	SPARE	72

	MISC	RCPT	MOTOR	HTG	HTG	MOTOR	RCPT	MISC	
LEFT SIDE SUB-TOTAL	3500.0	3420.0	11211.1	1560.0	7040.0	22453.2	1920.0	13645.4	RIGHT SIDE SUB-TOTAL
TOTAL CONNECTED LOAD	17145.4	5340.0	33664.3	8600.0	A PHASE	B PHASE	C PHASE	TOTAL CONNECTED LOAD PER PHASE	
DEMAND FACTOR	1.0	10k,50%	0.8	0.8					
ESTIMATED DEMAND	17145.4	5340.0	26931.4	6880.0					
TOTAL ESTIMATED DEMAND (VA)		56296.84							
TOTAL AMPS		156.26							

NOTES: COORDINATE WITH MECH. CONTRACTOR FOR CB SIZE WITH MAX ALLOWED BY SELECTED EQUIP. MANUFACTURER.

PANELBOARD SCHEDULE

NOTES: PANEL SHALL BE FULLY RATED.

PANEL	SOURCE	RATINGS (AMPS)		PHASE/ WIRE	VOLTAGE	MOUNTING	UL LISTING INT. RATING (RMS SYM. AMPS)	DESIGN MAKE SQ-D	NEMA TYPE
F1	NLS-L2	MCB 60A	MLO -	3PH 4W	208/120	SURFACE	10 KAIC	NQ418L1C	1

CKT NO.	DESCRIPTION	BREAKER	MISC	RCPT	MOTOR	HTG	HTG	MOTOR	RCPT	MISC	BREAKER	DESCRIPTION	CKT NO.
			VA LOAD				VA LOAD						
1	TANK HEATER CONTROL	30A/2P	4992.0							1000.0	20A/1P	DIESEL PUMP DISP#1	2
3								1000.0			20A/1P	DIESEL SUMP PUMP#1	4
5	FUEL MANAGEMENT DATA RECORDER	20A/1P	1000.0							500.0	20A/1P	LIGHTING	6
7	TANK MONITORING PANEL [INTERIOR]	15A/2P	500.0							500.0	20A/1P	LEAK MONITORING	8
9			500.0							500.0	20A/1P	CARD READER#1	10
11	FUEL SHUT-OFF	20A/1P	500.0				2880.0				30A/1P	HEAT TRACE	12
13	HYDRO TANK CONTROL	20A/1P	500.0							500.0	20A/1P	CARD READER#2	14
15	SPARE	20A/1P								1000.0	20A/1P	DIESEL PUMP DISP#2	16
17	SPARE	20A/1P						1000.0			20A/1P	DIESEL SUMP PUMP#2	18
19	SPARE	20A/1P									20A/1P	SPARE	20
21	SPARE	20A/1P									20A/1P	SPARE	22
23	SPARE	20A/1P									20A/1P	SPARE	24

	MISC	RCPT	MOTOR	HTG	HTG	MOTOR	RCPT	MISC	
LEFT SIDE SUB-TOTAL	7992.0	0.0	0.0	0.0	2880.0	2000.0	0.0	4000.0	RIGHT SIDE SUB-TOTAL
TOTAL CONNECTED LOAD	11992.0	0.0	2000.0	2880.0	A PHASE	B PHASE	C PHASE	TOTAL CONNECTED LOAD PER PHASE	
DEMAND FACTOR	1.0	10k,50%	0.8	0.8					
ESTIMATED DEMAND	11992.0	0.0	1600.0	2304.0					
TOTAL ESTIMATED DEMAND (VA)		15896.00							
TOTAL AMPS		44.12							

NOTES: PROVIDE 60A SHUNT TRIP MCB. SHUNT TRIP CONNECTED TO EMERGENCY FUEL SHUTDOWN SWITCH ON EXTERIOR OF BLDG. REFER TO DWG. E-102.

PANELBOARD SCHEDULE

NOTES: PANEL SHALL BE FULLY RATED.

PANEL	SOURCE	RATINGS (AMPS)		PHASE/ WIRE	VOLTAGE	MOUNTING	UL LISTING INT. RATING (RMS SYM. AMPS)	DESIGN MAKE SQ-D	NEMA TYPE
LP-1	MDP-L	MCB 100A	MLO -	3PH 4W	208 / 120	SURFACE	10 KAIC	NQ430L1C	1

CKT NO.	DESCRIPTION	BREAKER	MISC	RCPT	MOTOR	HTG	HTG	MOTOR	RCPT	MISC	BREAKER	DESCRIPTION	CKT NO.
			VA LOAD				VA LOAD						
1	GARAGE LIGHTS - a	20A/1P	1306.0							420.0	20A/1P	LTGS 105&107-LOCKERS	2
3	GARAGE LIGHTS - b	20A/1P	1306.0							120.0	20A/1P	LTGS 108-ELEC&111-MECH	4
5	GARAGE LIGHTS - c	20A/1P	1120.0							380.0	20A/1P	LTGS 102, 103 & 106	6
7	LTGS 104-CORR, 106-JAN	20A/1P	248.5							180.0	20A/1P	GARAGE SE WALL TASK LGTS	8
9	LTGS 112-DATA, 110-TOOL	20A/1P	150.0							180.0	20A/1P	GARAGE NE WALL TASK LGTS	10
11	GARAGE WALL TASK LGTS BY 111	20A/1P	90.0							180.0	20A/1P	GARAGE SW WALL TASK LGTS	12
13	SPARE	20A/1P								1188.0	20A/1P	WASHBAY WALL TASK LGTS	14
15	SPARE	20A/1P									20A/1P	SPARE	16
17	SPARE	20A/1P									20A/1P	SPARE	18
19	SPARE	20A/1P									20A/1P	SPARE	20
21	SPARE	20A/1P									20A/1P	SPARE	22
23	SPARE	20A/1P									20A/1P	SPARE	24
25	SPARE	20A/1P									20A/1P	SPARE	26
27	SPARE	20A/1P									20A/1P	SPARE	28
29	SPARE	20A/1P									20A/1P	SPARE	30

	MISC	RCPT	MOTOR	HTG	HTG	MOTOR	RCPT	MISC	
LEFT SIDE SUB-TOTAL	4220.5	0.0	0.0	0.0	0.0	0.0	0.0	2648.0	RIGHT SIDE SUB-TOTAL
TOTAL CONNECTED LOAD	6868.5	0.0	0.0	0.0	A PHASE	B PHASE	C PHASE	TOTAL CONNECTED LOAD PER PHASE	
DEMAND FACTOR	1.0	10k,50%	0.8	0.8					
ESTIMATED DEMAND	6868.5	0.0	0.0	0.0					
TOTAL ESTIMATED DEMAND (VA)		6868.50							
TOTAL AMPS		19.07							

NOTES:

PANELBOARD SCHEDULE

NOTES: PANEL SHALL BE FULLY RATED.

PANEL	SOURCE	RATINGS (AMPS)		PHASE/ WIRE	VOLTAGE	MOUNTING	UL LISTING INT. RATING (RMS SYM. AMPS)	DESIGN MAKE SQ-D	NEMA TYPE
LS-H	MDP VIA ATS-LS	MCB 200A	MLO -	3PH 4W	480/277	SURFACE	65 KAIC	NF430L2C	1

CKT NO.	DESCRIPTION	BREAKER	MISC	RCPT	MOTOR	HTG	HTG	MOTOR	RCPT	MISC	BREAKER	DESCRIPTION	CKT NO.
			VA LOAD				VA LOAD						
1													2
3	T-2 XFMR [30KVA] LS-L	50A/3P	19774.1	720.0	969.9	0.0					20A/3P	SPARE	4
5													6
7													8
9	FIRE PUMP [20 HP] (NORMAL FEED BEFORE INCOMING SERVICE)	60A/3P			21512.1						20A/3P	SPARE	10
11													12
13													14
15	SPARE	60A/3P									20A/3P	SPARE	16
17													18
19													20
21	SPARE	20A/3P									20A/3P	SPARE	22
23													24
25													26
27	SPARE	15A/3P									15A/3P	SPARE	28
29													30

	MISC	RCPT	MOTOR	HTG	HTG	MOTOR	RCPT	MISC	
LEFT SIDE SUB-TOTAL	19774.1	720.0	22482.0	0.0	0.0	0.0	0.0	0.0	RIGHT SIDE SUB-TOTAL
TOTAL CONNECTED LOAD	19774.1	720.0	22482.0	0.0	A PHASE	B PHASE	C PHASE	TOTAL CONNECTED LOAD PER PHASE	
DEMAND FACTOR	1.0	10k,50%	0.7	0.7					
ESTIMATED DEMAND	19774.1	720.0	15737.4	0.0					
TOTAL ESTIMATED DEMAND (VA)		36231.48							
TOTAL AMPS		100.57							

NOTES:

PANELBOARD SCHEDULE

NOTES: PANEL SHALL BE FULLY RATED.

PANEL	SOURCE	RATINGS (AMPS)		PHASE/ WIRE	VOLTAGE	MOUNTING	UL LISTING INT. RATING (RMS SYM. AMPS)	DESIGN MAKE SQ-D	NEMA TYPE
LS-L	LS-H 30KVA	MCB 100A	MLO -	3PH 4W	208/120	SURFACE	22 KAIC	NQ430L1C	1

CKT NO.	DESCRIPTION	BREAKER	MISC	RCPT	MOTOR	HTG	HTG	MOTOR	RCPT	MISC	BREAKER	DESCRIPTION	CKT NO.
			VA LOAD				VA LOAD						
1	GARAGE EM LIGHTS	20A/1P	980.0							1920.0	20A/1P	FIRE ALARM PANEL	2
3	EXIT LTGS & EM. NL LTGS	20A/1P	455.4							139.0	20A/1P	PUMP HOUSE LTGS	4
5	EXTERIOR EM LTGS	20A/1P	429.0						720.0		20A/1P	PUMP HOUSE RCPTS	6
7										1440.0	20A/1P	GRAP	8
9	JOCKEY PUMP [3/4 HP]	15A/3P			969.9						20A/1P	SPARE	10
11											20A/1P	SPARE	12
13											20A/1P	SPARE	14
15	GENERATOR PANEL	60A/3P	14410.7								20A/1P	SPARE	16
17											20A/1P	SPARE	18
19	SPARE	20A/1P									20A/1P	SPARE	20
21	SPARE	20A/1P									20A/1P	SPARE	22
23	SPARE	20A/1P									20A/1P	SPARE	24
25	SPARE	20A/1P									20A/1P	SPARE	26
27	SPARE	20A/1P									20A/1P	SPARE	28
29	SPARE	20A/1P									20A/1P	SPARE	30

	MISC	RCPT	MOTOR	HTG	HTG	MOTOR	RCPT	MISC	
LEFT SIDE SUB-TOTAL	16275.1	0.0	969.9	0.0	0.0	0.0	720.0	3499.0	RIGHT SIDE SUB-TOTAL
TOTAL CONNECTED LOAD	19774.1	720.0	969.9	0.0	A PHASE	B PHASE	C PHASE	TOTAL CONNECTED LOAD PER PHASE	
DEMAND FACTOR	1.0	10k,50%	0.7	0.7					
ESTIMATED DEMAND	19774.1	720.0	679.0	0.0					
TOTAL ESTIMATED DEMAND (VA)		21173.03							
TOTAL AMPS		58.77							

NOTES:

PANELBOARD SCHEDULE

NOTES: PANEL SHALL BE FULLY RATED.

PANEL	SOURCE	RATINGS (AMPS)		PHASE/ WIRE	VOLTAGE	MOUNTING	UL LISTING INT. RATING (RMS SYM. AMPS)	DESIGN MAKE SQ-D	NEMA TYPE
NLS-H	MDP VIA ATS-NLS	MCB 400A	MLO -	3PH 4W	480/277	SURFACE	35 KAIC	NF442L4C	1

CKT NO.	DESCRIPTION	BREAKER	MISC	RCPT	MOTOR	HTG	HTG	MOTOR	RCPT	MISC	BREAKER	DESCRIPTION	CKT NO.
			VA LOAD				VA LOAD						
1													2
3	T-3 XFMR [75KVA] NLS-L1 & L2	125A/3P	20233.4	34060.0	61136.3	25768.0					20A/3P	SPARE	4
5													6
7													8
9	DOMESTIC WATER PUMP DWP-1 [3 HP]	15A/3P			3824.4						20A/3P	SPARE	10
11													12
13													14
15	DOMESTIC WATER PUMP DWP-2 [3 HP]	15A/3P			3824.4						20A/3P	SPARE	16
17													18
19													20
21	GRINDER PUMP GP-1 [3 HP]	15A/3P			3824.4							SPACE	22
23													24
25													26
27	GRINDER PUMP GP-2 [3 HP]	15A/3P			3824.4							SPACE	28
29													30
31													32
33	P-1 [2.5 HP]	15A/3P			3266.6							SPACE	34
35													36
37													38
39	P-2 [2.5 HP] [REDUNDANT]	15A/3P										SPACE	40
41													42

	MISC	RCPT	MOTOR	HTG	HTG	MOTOR	RCPT	MISC	
LEFT SIDE SUB-TOTAL	20233.4	34060.0	79700.4	25768.0	0.0	0.0	0.0	0.0	RIGHT SIDE SUB-TOTAL
TOTAL CONNECTED LOAD	20233.4	34060.0	79700.4	25768.0	A PHASE	B PHASE	C PHASE	TOTAL CONNECTED LOAD PER PHASE	
DEMAND FACTOR	1.0	10k,50%	0.7	0.7					
ESTIMATED DEMAND	20233.4	22030.0	55790.3	18037.6					
TOTAL ESTIMATED DEMAND (VA)		116091.29							
TOTAL AMPS		322.24							

NOTES: COORDINATE WITH MECH. CONTRACTOR FOR CB SIZE WITH MAX ALLOWED BY SELECTED EQUIP. MANUFACTURER.

PANELBOARD SCHEDULE

NOTES: PANEL SHALL BE FULLY RATED.

PANEL	SOURCE	RATINGS (AMPS)		PHASE/ WIRE	VOLTAGE	MOUNTING	UL LISTING INT. RATING (RMS SYM. AMPS)	DESIGN MAKE SQ-D	NEMA TYPE
MDP-H	UTILITY	MCB 400A	MLO -	3PH 4W	480/277	SURFACE	65 KAIC	HCM23734M	1

CKT NO.	DESCRIPTION	BREAKER	MISC	RCPT	MOTOR	HTG	HTG	MOTOR	RCPT	MISC	BREAKER	DESCRIPTION	CKT NO.
			VA LOAD				VA LOAD						
1													2
3	T-1 XFMR [112.5] MDP-L	175A/3P	6868.5	45256.0	39551.3	0.0	0.0	22482.0	720.0	19774.1	200A/3P	PANEL LS-H VIA ATS-LS	4
5													6
7													8
9	SPACE						25768.0	79700.4	34060.0	20233.4	400A/3P	PANEL NLS-H VIA ATS-NLS	10
11													12
13													14
15	SPACE										200A/3P	SPARE	16
17													18
19													20
21	SPACE										30A/3P	SPD - NOTE 1	22
23													24

	MISC	RCPT	MOTOR	HTG	HTG	MOTOR	RCPT	MISC	
LEFT SIDE SUB-TOTAL	6868.5	45256.0	39551.3	0.0	25768.0	102182.4	34780.0	40007.5	RIGHT SIDE SUB-TOTAL
TOTAL CONNECTED LOAD	46876.0	80036.0	141733.7	25768.0	A PHASE	B PHASE	C PHASE	TOTAL CONNECTED LOAD PER PHASE	
DEMAND FACTOR	1.0	10k,50%	0.7	0.8					
ESTIMATED DEMAND	46876.0	45018.0	99213.6	20614.4					
TOTAL ESTIMATED DEMAND (VA)		211721.97							
TOTAL AMPS		254.66							

NOTE 1: COORDINATE BREAKER SIZE WITH SPD SELECTED.

PANELBOARD SCHEDULE

NOTES: PANEL SHALL BE FULLY RATED.

PANEL	SOURCE	RATINGS (AMPS)		PHASE/ WIRE	VOLTAGE	MOUNTING	UL LISTING INT. RATING (RMS SYM. AMPS)	DESIGN MAKE SQ-D	NEMA TYPE
MDP-L	MDP-H 112.5KVA	MCB 400A	MLO -	3PH 4W	208/120	SURFACE	25 KAIC	HCM23734M	1

CKT NO.	DESCRIPTION	BREAKER	MISC	RCPT	MOTOR	HTG	HTG	MOTOR	RCPT	MISC	BREAKER	DESCRIPTION	CKT NO.
			VA LOAD				VA LOAD						
1													2
3	PANEL PP-1	225A/3P	0.0	45256.0	39551.3	0.0					200A/3P	SPARE	4
5													6
7													8
9	PANEL LP-1	125A/3P	6868.5	0.0	0.0	0.0					200A/3P	SPARE	10
11													12
13													14
15	SPARE	125A/3P									200A/3P	SPARE	16
17													18
19													20
21	SPARE	125A/3P									30A/3P	SPARE	22
23													24

	MISC	RCPT	MOTOR	HTG	HTG	MOTOR	RCPT	MISC	
LEFT SIDE SUB-TOTAL	6868.5	45256.0	39551.3	0.0	0.0	0.0	0.0	0.0	RIGHT SIDE SUB-TOTAL
TOTAL CONNECTED LOAD	6868.5	45256.0	39551.3	0.0	A PHASE	B PHASE	C PHASE	TOTAL CONNECTED LOAD PER PHASE	
DEMAND FACTOR	1.0	10k,50%	0.7	0.8					
ESTIMATED DEMAND	6868.5	27628.0	27685.9	0.0					
TOTAL ESTIMATED DEMAND (VA)		62182.40							
TOTAL AMPS		172.60							

PANELBOARD SCHEDULE

NOTES: PANEL SHALL BE FULLY RATED.

PANEL	SOURCE	RATINGS (AMPS)		PHASE/ WIRE	VOLTAGE	MOUNTING	UL LISTING INT. RATING (RMS SYM. AMPS)	DESIGN MAKE SQ-D	NEMA TYPE
PP-1	MDP-L	MCB 225A	MLO -	3PH 4W	208 / 120	SURFACE	10 KAIC	NQ472L2C	1

CKT NO.	DESCRIPTION	BREAKER	MISC	RCPT	MOTOR	HTG	HTG	MOTOR	RCPT	MISC	BREAKER	DESCRIPTION	CKT NO.
			VA LOAD				VA LOAD						
1	WATER COOLER	20A/1P		1920.0					540.0		20A/1P	CORD/REEL RCPT	2
3	BREAK RM RCPTS	20A/1P		1080.0					540.0		20A/1P	SOUTH WEST EXT RCPTS	4
5	BREAK RM RCPTS	20A/1P		720.0					540.0		20A/1P	SOUTH EAST EXT RCPTS	6
7	NORTH WEST EXT RCPTS	20A/1P		720.0					540.0		20A/1P	RCPT LOCKERS/JAN	8
9	NORTH EAST EXT RCPTS	20A/1P		720.0					1260.0		20A/1P	RCPTS - 101&104	10
11	BREAK RM RCPT	20A/1P		180.0					900		20A/1P	EXT RCPTS	12
13	BREAK RM TV	20A/1P		600.0									14
15								2424.9			15A/3P	AHU-1	16
17	ACCU-1	80A/3P			21477.4								18
19													20
21	CORD/REEL RCPT	20A/1P		540.0				1593.5			15A/3P	RF-1	22
23	SPARE	20A/1P											24
25													26
27	VEHICLE EXHAUST SYSTEM	20A/3P			1000.0			11600.6			60A/3P	AIR COMPRESSOR	28
29													30
31	BLOCK HEATER RCPT	20A/1P		1800.0					540.0		20A/1P	CORD/REEL RCPT	32
33	BLOCK HEATER RCPT	20A/1P		1800.0					540.0		20A/1P	CORD/REEL RCPT	34
35	BLOCK HEATER RCPT	20A/1P		1800.0					540.0		20A/1P	CORD/REEL RCPT	36
37	BLOCK HEATER RCPT	20A/1P		1800.0									38
39	BLOCK HEATER RCPT	20A/1P		1800.0				1454.9			15A/3P	EF-10	40
41	OFFICE TV	20A/1P		600.0									42
43	CORD/REEL RCPT	20A/1P		540.0							20A/1P	SPARE	44
45	CORD/REEL RCPT	20A/1P		540.0							20A/1P	SPARE	46
47	CORD/REEL RCPT	20A/1P		540.0							20A/1P	SPARE	48
49											20A/1P	SPARE	50
51	CAR CHARGING STATION	40A/3P		10808.0							20A/1P	SPARE	52
53											20A/1P	SPARE	54
55											20A/1P	SPARE	56
57	CAR CHARGING STATION	40A/3P		10808.0							20A/1P	SPARE	58
59											20A/1P	SPARE	60
61	SPARE	20A/1P									20A/1P	SPARE	62
63	SPARE	20A/1P									20A/1P	SPARE	64
65	SPARE	20A/1P									20A/1P	SPARE	66
67	SPARE	20A/1P									20A/1P	SPARE	68
69	SPARE	20A/1P									20A/1P	SPARE	70
71	SPARE	20A/1P									20A/1P	SPARE	72

	MISC	RCPT	MOTOR	HTG	HTG	MOTOR	RCPT	MISC	
LEFT SIDE SUB-TOTAL	0.0	39316.0	22477.4	0.0	0.0	17073.9	5940.0	0.0	RIGHT SIDE SUB-TOTAL
TOTAL CONNECTED LOAD	0.0	45256.0	39551.3	0.0	A PHASE	B PHASE	C PHASE	TOTAL CONNECTED LOAD PER PHASE	
DEMAND FACTOR	1.0	10k,50%	0.8	0.8					
ESTIMATED DEMAND	0.0	27628.0	31641.0	0.0					
TOTAL ESTIMATED DEMAND (VA)		59269.03							
TOTAL AMPS		164.51							

NOTES:

PANELBOARD KEY

NLS-L1	LP-1	MDP-H
NLS-L2	LS-H	MDP-L
F1	LS-L	PP-1
-	NLS-H	-

NEW YORK STATE OF OPPORTUNITY. Office of General Services

DESIGN & CONSTRUCTION

CONSULTANT:

LaBella Powered by partnership.

MH PROFESSIONAL ENGINEERING, PLLC

WARNING:

THE ALTERATION OF THIS MATERIAL IN ANY WAY, UNLESS DONE UNDER THE DIRECTION OF A COMPARABLE PROFESSIONAL, I.E. ARCHITECT FOR AN ARCHITECT, ENGINEER FOR AN ENGINEER OR LANDSCAPE ARCHITECT FOR A LANDSCAPE ARCHITECT, IS A VIOLATION OF THE NEW YORK STATE EDUCATION LAW AND/OR REGULATIONS AND IS A CLASS 'A' MISDEMEANOR.

CONTRACT: ELECTRICAL

TITLE: PROVIDE SUB-HEADQUARTERS BUILDING

LOCATION: DOT REGION 8, DUTCHESS COUNTY 205 LIME KILN RD. EAST FISHKILL, NEW YORK 12533

CLIENT: NEW YORK STATE DEPARTMENT OF TRANSPORTATION

MARK	DATE	DESCRIPTION
	10/17/2019	BID DOCUMENTS

PROJECT NUMBER: 45552-E

DESIGNED BY: AH

DRAWN BY: JM

FIELD CHECK:

APPROVED: MH

SHEET TITLE: PANEL SCHEDULES

DRAWING NUMBER: E-203

KEYED NOTES:

1. 4" RIGID STEEL CONDUIT FOR POWER UP 10' FROM BASE OF POLE. PROVIDE 90 DEGREE RIGID STEEL ELBOW AT THE BASE OF THE POLE. RUN 4" SCHEDULE 80 PVC CONDUIT UNDER GROUND. REFER TO SITE PLAN E-100.
2. RUN (2) 4" SCHEDULE 80 PVC ONLY WITH PULL STRING FOR TELEPHONE UP 10' FROM BASE OF POLE. CAP IN DATA ROOM 106 6" AFF FOR FUTURE USE. REFER TO SITE PLAN E-100 & E-104.
3. #1/0 GROUND CONDUCTOR TO BUILDING STEEL. REFER TO DETAIL #2/E-401
4. RUN 4" SCHEDULE 80 PVC ONLY WITH PULL STRING FOR FUTURE USE. CAP OUTSIDE OF BUILDING 12" ABOVE FINISHED GRADE.
5. STUB UP IN TEL/DATA ROOM.
6. ATS-LS: 200A, 480 / 277V, 3 PHASE, 4W, 65KAIC, 2 SETS OF AUXILIARY CONTACTS.
7. ATS-NLS: 400A, 480 / 277V, 3 PHASE, 4W, 65KAIC, 2 SETS OF AUXILIARY CONTACTS.
8. CONNECT TO GROUND ELECTRODE GRID. SEE DETAIL #2/E-403.
9. PROVIDE A 2" C. WITH PULLROPE FOR FIRE PUMP FIRE ALARM MONITORING. WHICH SHALL INCLUDE, BUT NOT LIMITED TO:
   - 9.1. MONITOR THE EMERGENCY POWER SOURCE
   - 9.2. MONITOR THE PHASE REVERSAL
   - 9.3. MONITOR PUMP OPERATING
   - 9.4. MONITOR POWER / PHASE FAILURE
   - 9.5. TRANSFER SWITCH POSITION
   - 9.6. PARALLEL CONTACT WITH THE LIFE SAFETY TRANSFER SWITCH, ATS-LS.
10. PROVIDE TERMINATION KIT FOR 500 KCMIL WIRE.

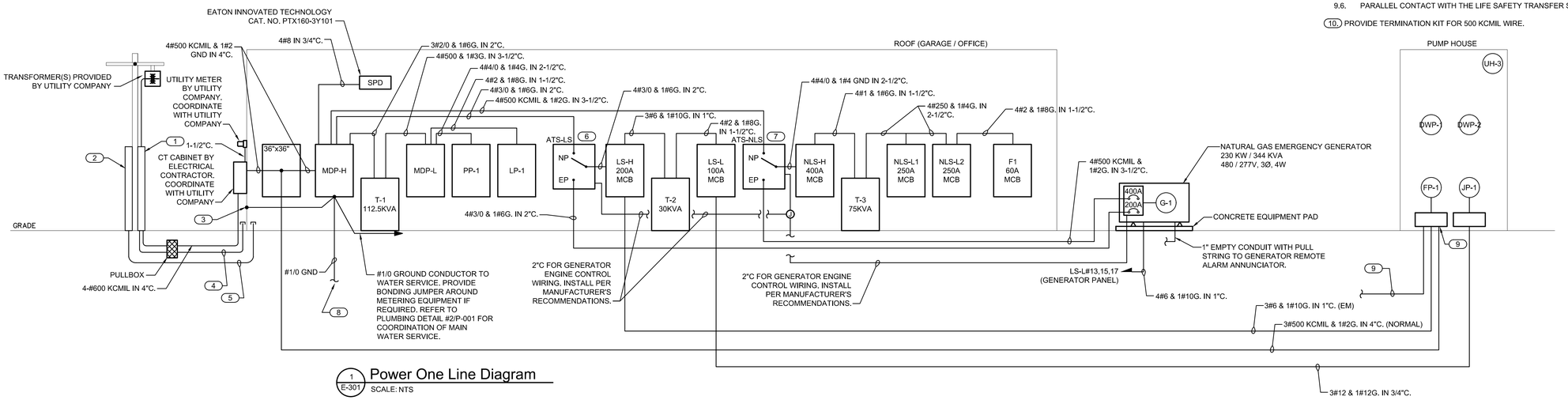

1 / E-301 Power One Line Diagram
SCALE: NTS

36x24 PLOT SHEET

NEW YORK STATE OF OPPORTUNITY. Office of General Services

DESIGN & CONSTRUCTION

CONSULTANT:

LaBella Powered by partnership.

MH PROFESSIONAL ENGINEERING, PLLC

WARNING:

THE ALTERATION OF THIS MATERIAL IN ANY WAY, UNLESS DONE UNDER THE DIRECTION OF A COMPARABLE PROFESSIONAL, I.E. ARCHITECT FOR AN ARCHITECT, ENGINEER FOR AN ENGINEER OR LANDSCAPE ARCHITECT FOR A LANDSCAPE ARCHITECT, IS A VIOLATION OF THE NEW YORK STATE EDUCATION LAW AND/OR REGULATIONS AND IS A CLASS 'A' MISDEMEANOR.

PROFESSIONAL ENGINEER MICHELLE M. HOUGHTALING 072116 STATE OF NEW YORK

CONTRACT: ELECTRICAL

TITLE: PROVIDE SUB-HEADQUARTERS BUILDING

LOCATION: DOT REGION 8, DUTCHESS COUNTY 205 LIME KILN RD. EAST FISHKILL, NEW YORK 12533

CLIENT: NEW YORK STATE DEPARTMENT OF TRANSPORTATION

MARK	DATE	DESCRIPTION
	10/17/2019	BID DOCUMENTS

PROJECT NUMBER:	45552-E
DESIGNED BY:	AH
DRAWN BY:	JM
FIELD CHECK:	
APPROVED:	MH

SHEET TITLE: ONE LINE DIAGRAM

DRAWING NUMBER: E-301

NOTES:

A. SERVICE ENTRANCE GROUNDING SYSTEM SHALL BE INSTALLED IN FULL COMPLIANCE WITH NEC SECTION 250.

B. REFER TO GROUNDING ELECTRODE GRID AND SPECIFICATION FOR ADDITIONAL INFORMATION.

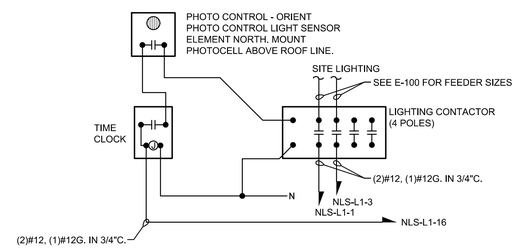

1 E-401 Exterior Lighting Control Schematic
SCALE: NTS

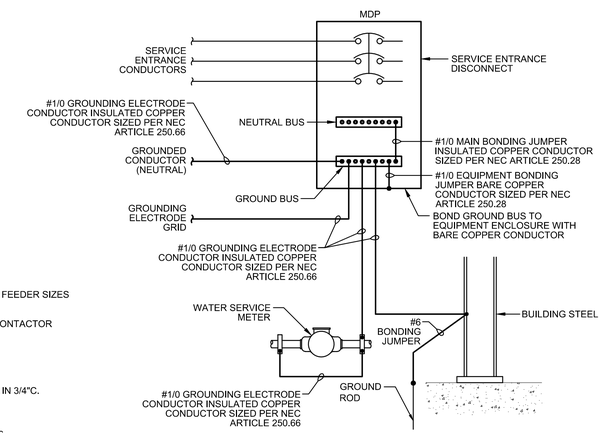

2 E-401 Service Entrance Grounding Detail
SCALE: 2

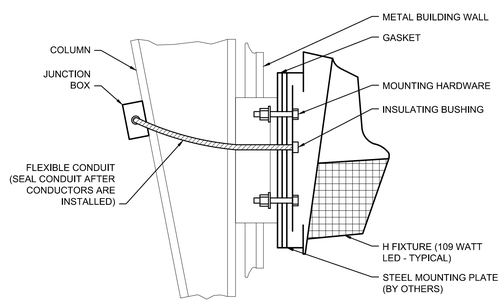

NOTE:
MOUNTING PADS (NOT SHOWN) ARE PROVIDED UNDER THE CONSTRUCTION CONTRACT.

3 E-401 Detail for Mounting Fixture Type H on Column
SCALE: NTS

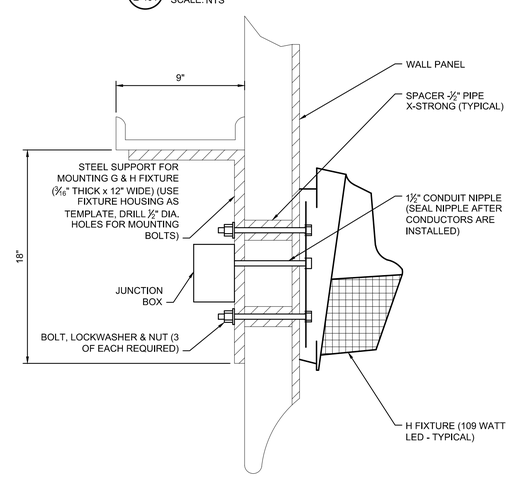

4 E-401 Detail for Mounting Fixture H on Wall
SCALE: NTS

NOTES:

A. INSTALL RECEPTACLE CABLE TO BE TAUT WHEN DOOR IS FULLY OPENED OR FULLY CLOSED.

B. COORDINATE LOCATION OF MANUAL PULL CHAIN OPERATOR & CONNECTION TO SAFETY EDGE DEVICE SO THAT RETRACTABLE CABLE DOES NOT CATCH ON THE CHAIN DURING OPERATION OF DOOR.

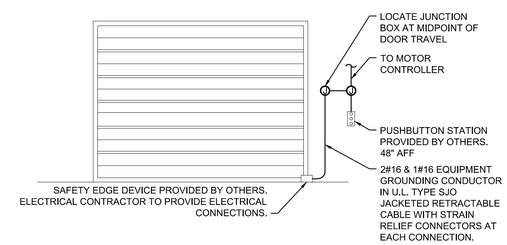

5 E-401 Elevation at Overhead Doors
SCALE: NTS

36x24 PLOT SHEET

NEW YORK STATE OF OPPORTUNITY. Office of General Services

DESIGN & CONSTRUCTION

CONSULTANT:

LaBella Powered by partnership.

MH PROFESSIONAL ENGINEERING, PLLC

WARNING:

THE ALTERATION OF THIS MATERIAL IN ANY WAY, UNLESS DONE UNDER THE DIRECTION OF A COMPARABLE PROFESSIONAL, I.E. ARCHITECT FOR AN ARCHITECT, ENGINEER FOR AN ENGINEER OR LANDSCAPE ARCHITECT FOR A LANDSCAPE ARCHITECT, IS A VIOLATION OF THE NEW YORK STATE EDUCATION LAW AND/OR REGULATIONS AND IS A CLASS 'A' MISDEMEANOR.

PROFESSIONAL ENGINEER MICHELLE M. HOUGHTALING 072116 STATE OF NEW YORK

CONTRACT:

ELECTRICAL

TITLE:

PROVIDE SUB-HEADQUARTERS BUILDING

LOCATION:
DOT REGION 8, DUTCHESS COUNTY
205 LIME KILN RD.
EAST FISHKILL, NEW YORK 12533

CLIENT:
NEW YORK STATE DEPARTMENT OF TRANSPORTATION

MARK	DATE	DESCRIPTION
	10/17/2019	BID DOCUMENTS

PROJECT NUMBER:	45552-E
DESIGNED BY:	AH
DRAWN BY:	JM
FIELD CHECK:	
APPROVED:	MH

SHEET TITLE:

ELECTRICAL DETAILS

DRAWING NUMBER:

E-401

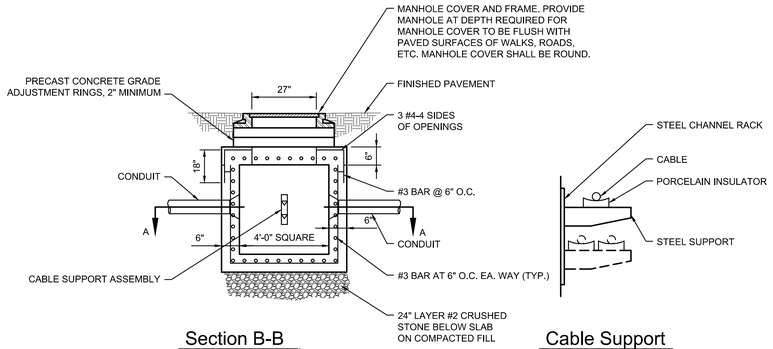

Section B-B
SCALE: NTS

Cable Support
SCALE: NTS

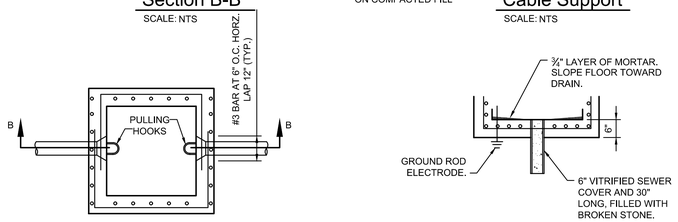

Section A-A
SCALE: NTS

NOTE:
NUMBER, SIZE & LOCATION OF CONDUITS AS REQUIRED.

Partial Section B-B
SCALE: NTS

1 E-402 Concrete Pullbox Detail for Power Field Constructed
SCALE: NTS

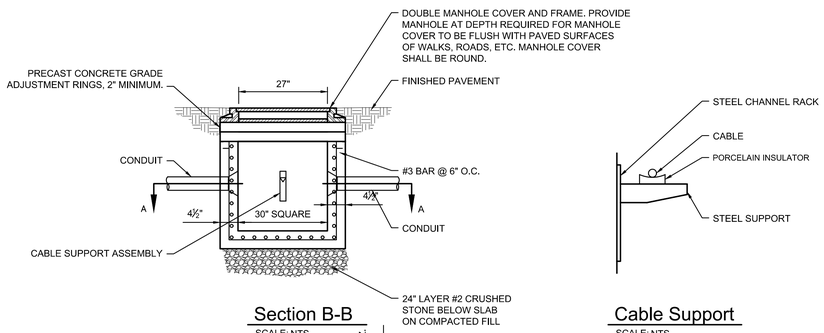

Section B-B
SCALE: NTS

Cable Support
SCALE: NTS

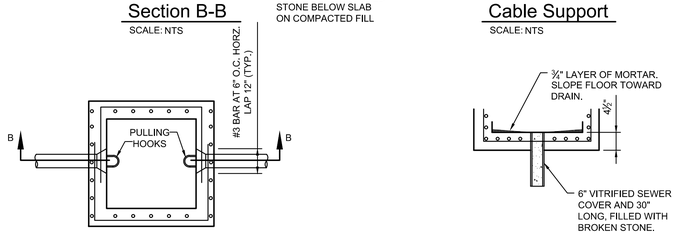

Section A-A
SCALE: NTS

NOTE:
NUMBER, SIZE & LOCATION OF CONDUITS AS REQUIRED.

Partial Section B-B
SCALE: NTS

2 E-402 Concrete Pullbox Detail for Signal Field Constructed
SCALE: NTS

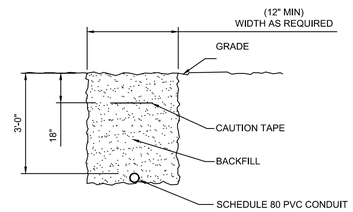

3 E-402 Trench Detail: Underground Conduit Installation
SCALE: NTS

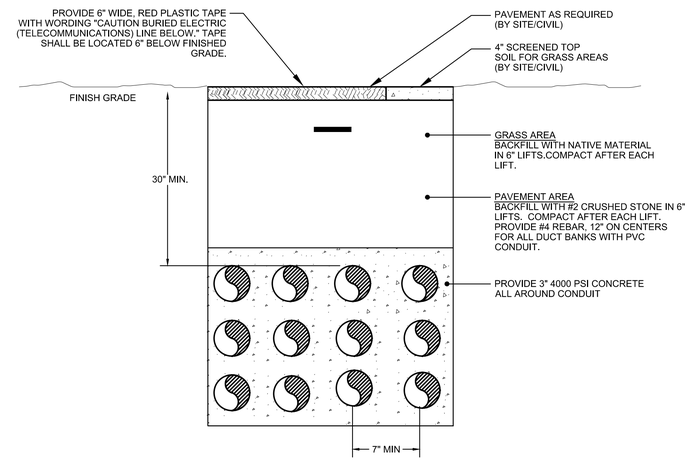

4 E-402 Concrete Encased Conduit Detail
SCALE: NTS

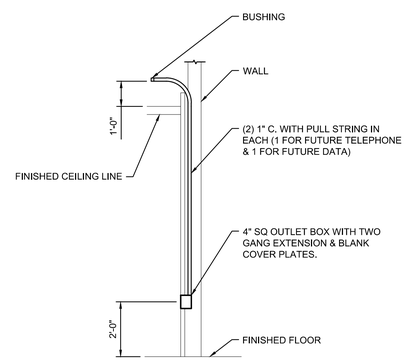

5 E-402 Telephone and Data Outlet Box Detail
SCALE: NTS

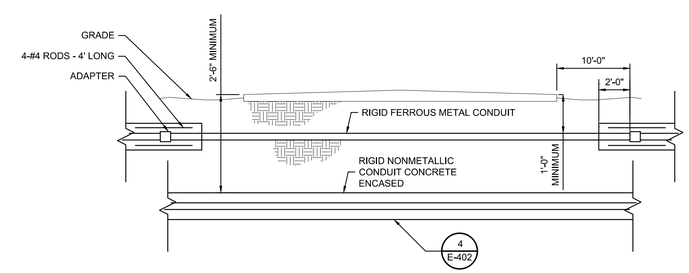

6 E-402 Conduits Under Roads or Parking Lots
SCALE: NTS

36x24 PLOT SHEET

NEW YORK STATE OF OPPORTUNITY. Office of General Services

DESIGN & CONSTRUCTION

CONSULTANT:

LaBella Powered by partnership.

MH PROFESSIONAL ENGINEERING, PLLC

WARNING:
THE ALTERATION OF THIS MATERIAL IN ANY WAY, UNLESS DONE UNDER THE DIRECTION OF A COMPARABLE PROFESSIONAL, I.E. ARCHITECT FOR AN ARCHITECT, ENGINEER FOR AN ENGINEER OR LANDSCAPE ARCHITECT FOR A LANDSCAPE ARCHITECT, IS A VIOLATION OF THE NEW YORK STATE EDUCATION LAW AND/OR REGULATIONS AND IS A CLASS 'A' MISDEMEANOR.

PROFESSIONAL ENGINEER MICHELLE M. HOUGHTALING 072116 STATE OF NEW YORK

CONTRACT:
ELECTRICAL

TITLE:
PROVIDE SUB-HEADQUARTERS BUILDING

LOCATION:
DOT REGION 8, DUTCHESS COUNTY
205 LIME KILN RD.
EAST FISHKILL, NEW YORK 12533

CLIENT:
NEW YORK STATE DEPARTMENT OF TRANSPORTATION

MARK	DATE	DESCRIPTION
	10/17/2019	BID DOCUMENTS

PROJECT NUMBER:	45552-E
DESIGNED BY:	AH
DRAWN BY:	JM
FIELD CHECK:	
APPROVED:	MH

SHEET TITLE:
ELECTRICAL DETAILS

DRAWING NUMBER:
E-402

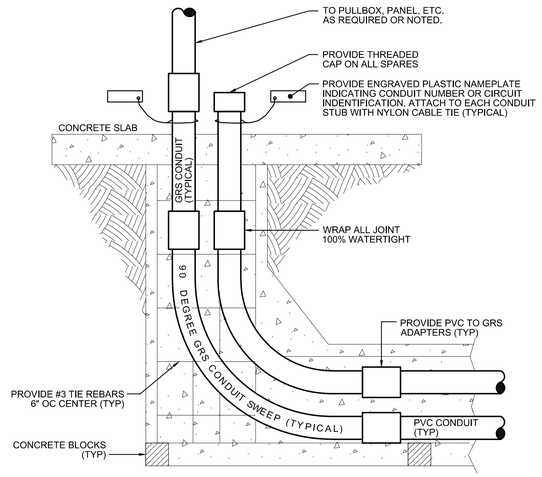

1 E-403 Conduit Stub-Up Detail
SCALE: NTS

NOTES:

A. SERVICE ENTRANCE GROUNDING SYSTEM SHALL BE INSTALLED IN FULL COMPLIANCE WITH NEC SECTION 250.

B. PROVIDE MOLDED FUSION WELDS FOR ALL BELOW GRADE GROUNDING CONNECTIONS.

C. PROVIDE SOLDER BLOCK IN GROUNDING ELECTRODE CONDUCTOR AT THE POINT OF ENTRANCE INTO THE FACILITY. SEAL CONDUIT 100% WATER TIGHT.

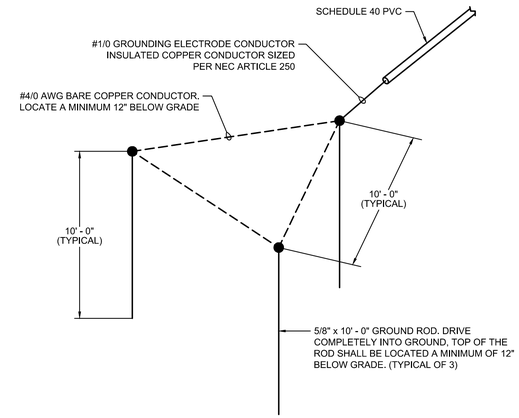

2 E-403 Ground Electrode Grid Detail
SCALE: NTS

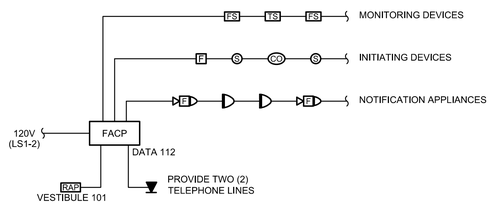

FIRE ALARM NOTES:

A. WIRING INDICATED ON THE RISER DIAGRAM IS DIAGRAMMATIC ONLY. IT IS NOT INTENDED TO INDICATE ROUTING OR QUANTITIES OF WIRES REQUIRED. PROVIDE WIRING FOR A COMPLETE SYSTEM AS REQUIRED BY THE SUBMITTED SYSTEM MANUFACTURER.

B. PROVIDE COMPLETE AND OPERABLE SYSTEM AS REQUIRED BY FIRE ALARM VENDOR.

C. ALL DEVICES ARE NOT INDICATED ON THE RISER DIAGRAM. REFER TO FLOOR PLANS AND EQUIPMENT SCHEDULE FOR QUANTITIES AND LOCATIONS OF DEVICES.

D. PROVIDE LOCKS FOR ALL CIRCUIT BREAKERS SUPPLYING FIRE ALARM EQUIPMENT.

E. PROVIDE CLASS A SIGNALING LINE CIRCUITS AND CLASS B NOTIFICATION APPLIANCE CIRCUITS.

F. ALL CABLE TERMINATIONS SHALL BE DONE AT THE DEVICE SCREW TERMINALS OR SCREW TYPE TERMINAL BLOCK. ALL CABLE TERMINATIONS SHALL USE NYLON INSULATED, LOCKING FORK, SOLDERLESS COMPRESSION TERMINAL.

G. ALL FIRE ALARM SYSTEM JUNCTION BOXES SHALL BE LABELED WITH STENCIL LETTERING INDICATING "FIRE ALARM SYSTEM".

H. ALL WIRING/CABLING SHALL BE INSTALLED IN CONDUIT.

I. ALL EQUIPMENT SHALL BE LISTED FOR USE WITH THE CHOSEN MANUFACTURER.

J. PROVIDE ANY EXPANSION BOARDS WIRING CABINETS, SUPPLEMENTAL POWER SUPPLIES, REMOTE BATTERIES, ETC. REQUIRED TO PROVIDE A COMPLETE AND FUNCTIONAL SYSTEM AS LAID OUT ON THE FLOOR PLANS. PROVIDE ADDITINAL 120V BRANCH CIRCUITS AS REQUIRED FOR ANY SUCH DEVICES.

K. PROVIDE A CARBON MONOXIDE SYSTEM. A CARBON MONOXIDE SYSTEM IS AN ADDRESSABLE SYSTEM THAT IS INTERCONNECTED WITH THE FIRE ALARM SYSTEM.

L. THE CARBON MONOXIDE SYSTEM SHALL COMPLY WITH 2015 NFPA 720 "INSTALLATION OF CARBON MONOXIDE DETECTION AND WARNING EQUIPMENT" AND LISTED IN ACCORDANCE WITH UL 2075.

M. COMBINATION CARBON MONOXIDE/SMOKE DETECTORS INSTALLED IN CARBON MONOXIDE SYSTEMS SHALL BE LISTED IN ACCORDANCE WITH UL 2075 AND UL 268.

N. NOTIFICATION APPLIANCES SHALL BE INSTALLED IN ACCORDANCE WITH NFPA 720 OR IN LOCATIONS APPROVED BY THE AHJ.

O. CARBON MONOXIDE DETECTION NOTIFICATION CAN BE LIMITED TO THE DETECTION ZONE WHERE THE CARBON MONOXIDE SIGNAL ORIGINATED.

P. CARBON MONOXIDE DETECTION SYSTEMS SHALL NOT ACTIVATE ANY NOTIFICATION APPLIANCE THAT ANNOUNCES A FIRE ALARM ANNUNCIATOR. CARBON MONOXIDE NOTIFICATION MUST HAVE ITS OWN DISTINCTIVE ANNUNCIATION (TEMPORAL 4) THAT IS CLEARLY RECOGNIZABLE (SOUNDER BASES).

Q. CARBON MONOXIDE NOTIFICATION APPLIANCES CANNOT SAY "FIRE". "ALARM" IS ACCEPTABLE.

3 E-403 Fire Alarm Diagram
SCALE: NTS

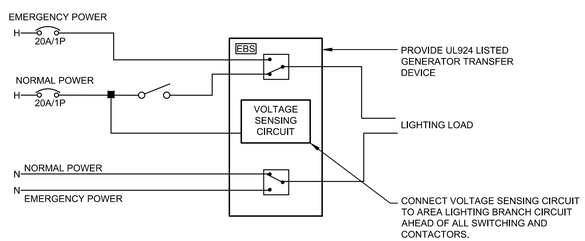

4 E-403 Emergency Lighting Bypass Detail
SCALE: NTS

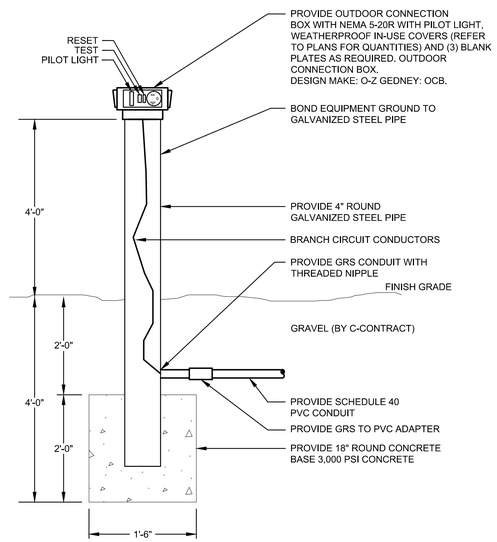

5 E-403 Block Heater Receptacle Detail
SCALE: NTS

36x24 PLOT SHEET

NEW YORK STATE OF OPPORTUNITY. Office of General Services
DESIGN & CONSTRUCTION

CONSULTANT:
LaBella Powered by partnership.
MH PROFESSIONAL ENGINEERING, PLLC

WARNING:
THE ALTERATION OF THIS MATERIAL IN ANY WAY, UNLESS DONE UNDER THE DIRECTION OF A COMPARABLE PROFESSIONAL, I.E. ARCHITECT FOR AN ARCHITECT, ENGINEER FOR AN ENGINEER OR LANDSCAPE ARCHITECT FOR A LANDSCAPE ARCHITECT, IS A VIOLATION OF THE NEW YORK STATE EDUCATION LAW AND/OR REGULATIONS AND IS A CLASS 'A' MISDEMEANOR.

PROFESSIONAL ENGINEER MICHELLE M. HOUGHTALING 072116 STATE OF NEW YORK

CONTRACT:
ELECTRICAL

TITLE:
PROVIDE SUB-HEADQUARTERS BUILDING

LOCATION:
DOT REGION 8, DUTCHESS COUNTY
205 LIME KILN RD.
EAST FISHKILL, NEW YORK 12533

CLIENT:
NEW YORK STATE DEPARTMENT OF TRANSPORTATION

MARK	DATE	DESCRIPTION
	10/17/2019	BID DOCUMENTS

PROJECT NUMBER:	45552-E
DESIGNED BY:	AH
DRAWN BY:	JM
FIELD CHECK:	
APPROVED:	MH

SHEET TITLE:
ELECTRICAL DETAILS

DRAWING NUMBER:
E-403

NOTES:

A. PANELBOARDS SUPPLIED BY A FEEDER SHALL BE MARKED TO INDICATE WHERE THE POWER SUPPLY ORIGINATES PER NEC SECTION 408.4(B).

B. PROVIDE ARC FLASH PROTECTION LABEL PER NEC SECTION 110.16.

C. REFER TO ELECTRICAL IDENTIFICATION SECTION 260195 FOR ADDITIONAL INFORMATION.

D. PROVIDE IDENTIFICATION FOR ALL PANELBOARD INSTALLATIONS.

E. 'LS' - LIFE SAFETY INDICATOR.

F. 'NLS' - NON-LIFE SAFETY INDICATOR.

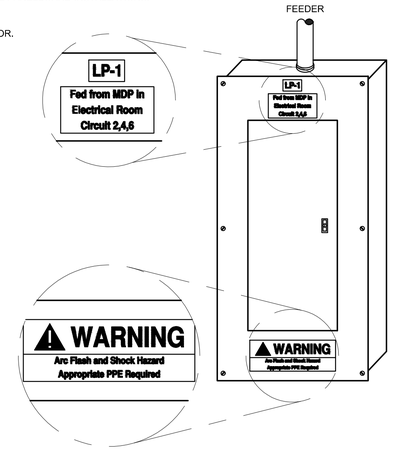

1 E-404 Panelboard Identification Detail
SCALE: NTS

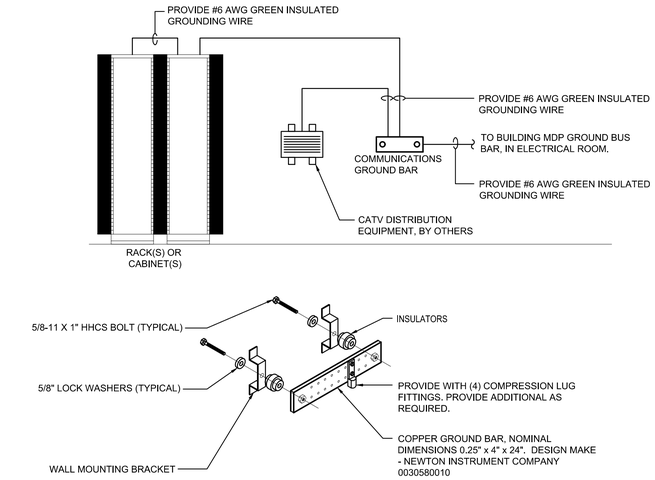

2 E-404 Telecom Ground Bus Detail
SCALE: NTS

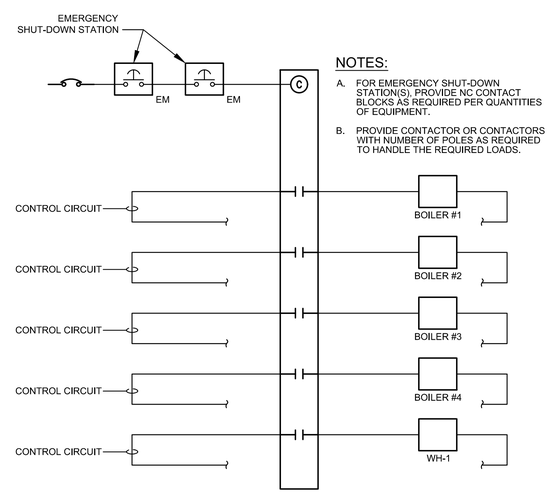

NOTES:

A. FOR EMERGENCY SHUT-DOWN STATION(S), PROVIDE NC CONTACT BLOCKS AS REQUIRED PER QUANTITIES OF EQUIPMENT.

B. PROVIDE CONTACTOR OR CONTACTORS WITH NUMBER OF POLES AS REQUIRED TO HANDLE THE REQUIRED LOADS.

3 E-404 Emergency Shut-Down Wiring Schematic
SCALE: NTS

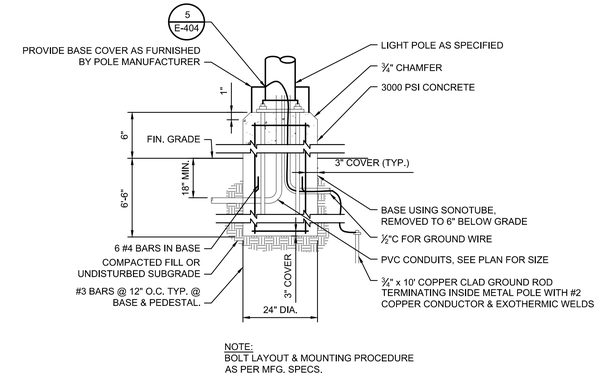

NOTE:
BOLT LAYOUT & MOUNTING PROCEDURE AS PER MFG. SPECS.

4 E-404 Site Lighting Pole Detail
SCALE: NTS

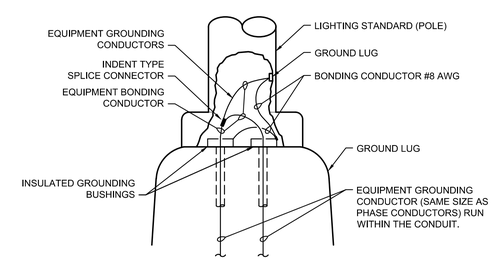

5 E-404 Grounding + Bonding Detail for Lighting Standard
SCALE: NTS

36x24 PLOT SHEET

NEW YORK STATE OF OPPORTUNITY. Office of General Services

DESIGN & CONSTRUCTION

CONSULTANT:

LaBella Powered by partnership.

MH PROFESSIONAL ENGINEERING, PLLC

WARNING:
THE ALTERATION OF THIS MATERIAL IN ANY WAY, UNLESS DONE UNDER THE DIRECTION OF A COMPARABLE PROFESSIONAL, I.E. ARCHITECT FOR AN ARCHITECT, ENGINEER FOR AN ENGINEER OR LANDSCAPE ARCHITECT FOR A LANDSCAPE ARCHITECT, IS A VIOLATION OF THE NEW YORK STATE EDUCATION LAW AND/OR REGULATIONS AND IS A CLASS 'A' MISDEMEANOR.

PROFESSIONAL ENGINEER MICHELLE M. HOUGHTALING 072116 STATE OF NEW YORK

CONTRACT: ELECTRICAL

TITLE: PROVIDE SUB-HEADQUARTERS BUILDING

LOCATION: DOT REGION 8, DUTCHESS COUNTY
205 LIME KILN RD.
EAST FISHKILL, NEW YORK 12533

CLIENT: NEW YORK STATE DEPARTMENT OF TRANSPORTATION

MARK	DATE	DESCRIPTION
	10/17/2019	BID DOCUMENTS

PROJECT NUMBER:	45552-E
DESIGNED BY:	AH
DRAWN BY:	JM
FIELD CHECK:	
APPROVED:	MH

SHEET TITLE: ELECTRICAL DETAILS

DRAWING NUMBER: E-404

NOTE:

A. HAZARDOUS AREAS WITHIN PUMP ENCLOSURES CLASS 1 DIVISION 1 UP TO 4'-0" VERTICALLY ABOVE THE DISPENSER PAD.

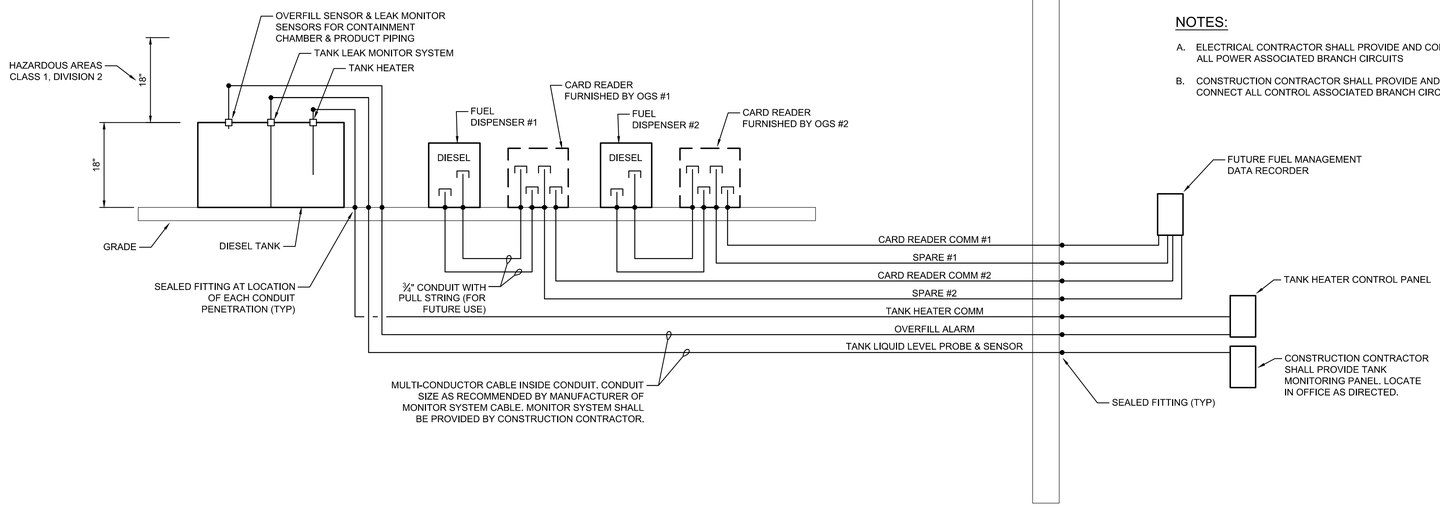

NOTES:

A. ELECTRICAL CONTRACTOR SHALL PROVIDE AND CONNECT ALL POWER ASSOCIATED BRANCH CIRCUITS

B. CONSTRUCTION CONTRACTOR SHALL PROVIDE AND CONNECT ALL CONTROL ASSOCIATED BRANCH CIRCUITS.

1 E-405 Control Wiring Diagram Above Ground Fuel Storage Tanks

SCALE: NTS

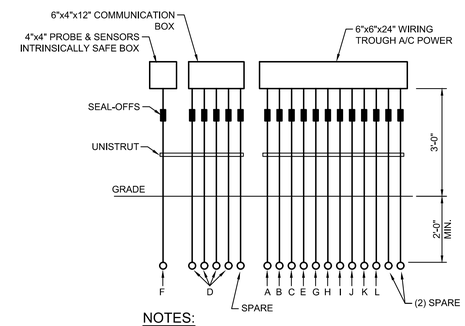

NOTES:

A. HEAT TRACE POWER
B. DIESEL PUMP DISPENSER POWER #1
C. CARD READER POWER #1
D. CARD READER COMMUNICATIONS, TANK HEATER COMM, TANK OVERFILL ALARM.
E. TANK HEATER POWER
F. TANK LIQUID LEVEL PROBE & SENSOR
G. LIGHT POLE POWER
H. LEAK DETECTION SYSTEM POWER
I. DIESEL SUMP PUMP POWER #1
J. DIESEL SUMP PUMP POWER #2
K. CARD READER POWER #2
L. DIESEL PUMP DISPENSER POWER #2

3 E-405 Wiring Trough Detail

SCALE: NTS

NOTE:

A. HAZARDOUS AREAS WITHIN PUMP ENCLOSURES CLASS 1 DIVISION 1 UP TO 4'-0" VERTICALLY ABOVE THE DISPENSER PAD.

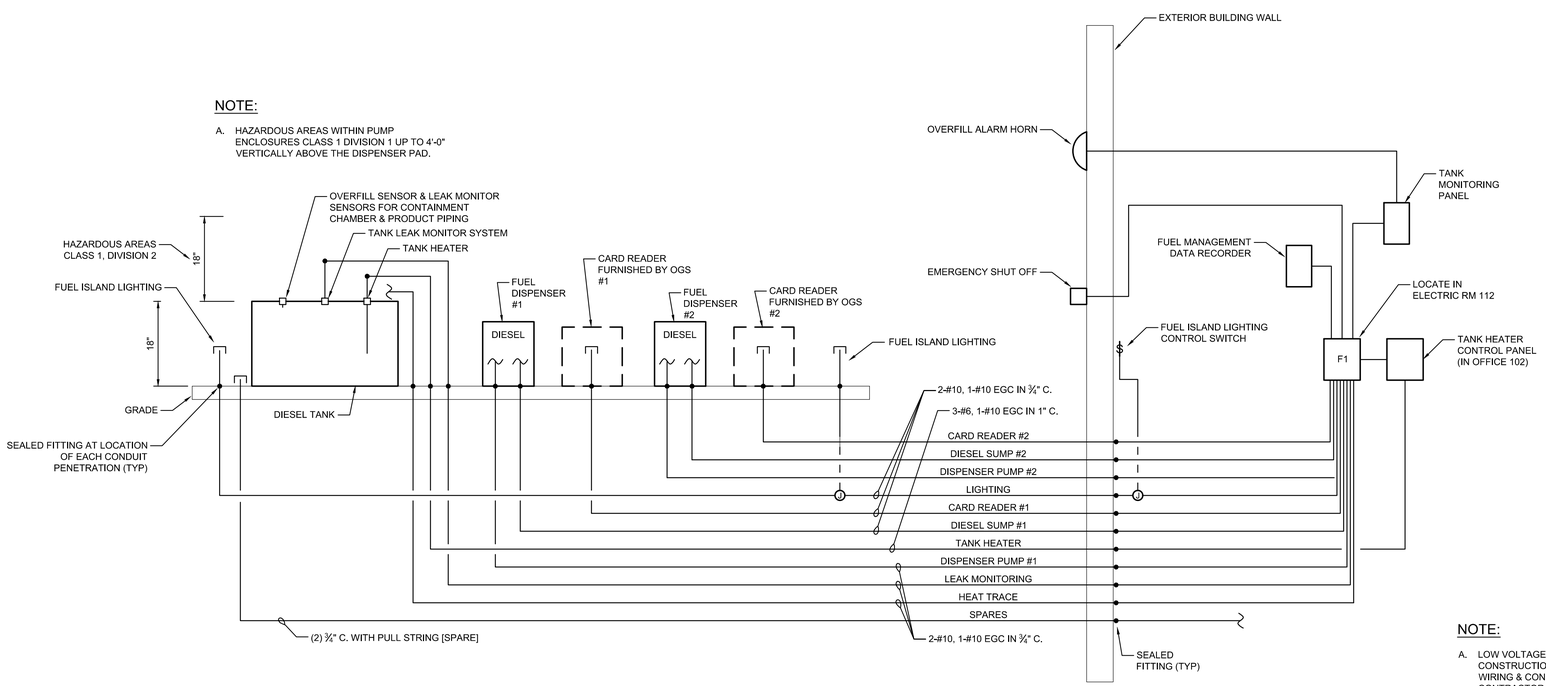

NOTE:

A. LOW VOLTAGE CONTROL WIRING BY CONSTRUCTION CONTRACTOR. POWER WIRING & CONDUIT BY ELECTRICAL CONTRACTOR.

2 E-405 Power Wiring Diagram Above Ground Fuel Storage Tanks

SCALE: NTS

36x24 PLOT SHEET

NEW YORK STATE OF OPPORTUNITY. Office of General Services

DESIGN & CONSTRUCTION

CONSULTANT:

LaBella Powered by partnership.

MH PROFESSIONAL ENGINEERING, PLLC

WARNING:

THE ALTERATION OF THIS MATERIAL IN ANY WAY, UNLESS DONE UNDER THE DIRECTION OF A COMPARABLE PROFESSIONAL, I.E. ARCHITECT FOR AN ARCHITECT, ENGINEER FOR AN ENGINEER OR LANDSCAPE ARCHITECT FOR A LANDSCAPE ARCHITECT, IS A VIOLATION OF THE NEW YORK STATE EDUCATION LAW AND/OR REGULATIONS AND IS A CLASS 'A' MISDEMEANOR.

PROFESSIONAL ENGINEER MICHELLE M. HOUGHTALING 072116 STATE OF NEW YORK

CONTRACT: ELECTRICAL

TITLE: PROVIDE SUB-HEADQUARTERS BUILDING

LOCATION: DOT REGION 8, DUTCHESS COUNTY 205 LIME KILN RD. EAST FISHKILL, NEW YORK 12533

CLIENT: NEW YORK STATE DEPARTMENT OF TRANSPORTATION

MARK	DATE	DESCRIPTION
	10/17/2019	BID DOCUMENTS

PROJECT NUMBER: 45552-E

DESIGNED BY: AH

DRAWN BY: JM

FIELD CHECK:

APPROVED: MH

SHEET TITLE: ELECTRICAL DETAILS

DRAWING NUMBER: E-405

COMcheck Software Version COMcheckWeb
Interior Lighting Compliance Certificate

Project Information

Energy Code: 2015 IECC
Project Title: East Fishkill DOT
Project Type: New Construction

Construction Site:
205 Lime Kiln Rd
East Fishkill, New York 12533

Owner/Agent:

Designer/Contractor:

Additional Efficiency Package(s)

Reduced interior lighting power. Requirements are implicitly enforced within interior lighting allowance calculations.

Allowed Interior Lighting Power

A Area Category	B Floor Area (ft2)	C Allowed Watts / ft2	D Allowed Watts
1-DOT Office (Office)	2648	0.74	1954
2-Vehicle Maintenance & Storage (Automotive Facility)	16659	0.72	11994
		Total Allowed Watts =	13949

Proposed Interior Lighting Power

A Fixture ID : Description / Lamp / Wattage Per Lamp / Ballast	B Lamps/ Fixture	C # of Fixture	D Fixture Watt.	E (C X D)
1-DOT Office (Office)				
LED: B: Troffer: LED Panel 38W:	1	32	38	1216
LED: D: Strip: LED Linear 33W:	1	11	30	330
LED: F: Other: Other:	1	1	20	20
2-Vehicle Maintenance & Storage (Automotive Facility)				
LED: A: Troffer: LED Panel 70W:	1	61	70	4270
LED: C: Strip: LED Linear 33W:	1	21	30	630
LED: J: Strip: LED Other Fixture Unit 103W:	1	8	99	792
LED: J1: Strip: LED Other Fixture Unit 103W:	1	12	99	1188
			Total Proposed Watts =	8446

Interior Lighting PASSES: Design 39% better than code

Interior Lighting Compliance Statement

Compliance Statement: The proposed interior lighting design represented in this document is consistent with the building plans, specifications, and other calculations submitted with this permit application. The proposed interior lighting systems have been designed to meet the 2015 IECC requirements in COM*check* Version COMcheckWeb and to comply with any applicable mandatory requirements listed in the Inspection Checklist.

Name - Title Signature Date

COMcheck Software Version COMcheckWeb
Exterior Lighting Compliance Certificate

Project Information

Energy Code: 2015 IECC
Project Title: East Fishkill DOT
Project Type: New Construction
Exterior Lighting Zone 1 (Developed rural area)

Construction Site:
205 Lime Kiln Rd
East Fishkill, New York 12533

Owner/Agent:

Designer/Contractor:

Allowed Exterior Lighting Power

A Area/Surface Category	B Quantity	C Allowed Watts /	D Tradable Wattage	E Allowed Watts (B X C)
Parking Lot (Parking area)	137029 ft2	0.04	Yes	5481
Driveway (Driveway)	10231 ft2	0.04	Yes	409
101- Vestibule (Main entry)	3 ft of door	20	Yes	60
115NE (Entry canopy)	54 ft2	0.25	Yes	14
115SW (Entry canopy)	54 ft2	0.25	Yes	14
115NW (Entry canopy)	54 ft2	0.25	Yes	14
115SE (Entry canopy)	54 ft2	0.25	Yes	14
SW 3-Bays (Special feature area)	2371 ft2	0.14	Yes	332
SE 3-Bays (Special feature area)	2371 ft2	0.14	Yes	332
N 8-Bays (Special feature area)	6174 ft2	0.14	Yes	864
Wrap around Main Entry (Walkway < 10 feet wide)	625 ft of	0.7	Yes	438
			Total Tradable Watts (a) =	7970
			Total Allowed Watts =	7970
			Total Allowed Supplemental Watts (b) =	500

(a) Wattage tradeoffs are only allowed between tradable areas/surfaces.
(b) A supplemental allowance equal to 500 watts may be applied toward compliance of both non-tradable and tradable areas/surfaces.

Proposed Exterior Lighting Power

A Fixture ID : Description / Lamp / Wattage Per Lamp / Ballast	B Lamps/ Fixture	C # of Fixture	D Fixture Watt.	E (C X D)
Parking Lot (Parking area, 137029 ft2): Tradable Wattage				
LED: PLL-1: Parking: LED Roadway-Parking Unit 106W:	1	5	102	510
LED: PLL-2: Parking: LED Roadway-Parking Unit 106W:	1	1	204	204
Driveway (Driveway, 10231 ft2): Tradable Wattage				
LED: PLL-1: Parking: LED Roadway-Parking Unit 106W:	1	2	102	204
101- Vestibule (Main entry, 3 ft of door width): Tradable Wattage				
LED: E: Downlight: Other:	1	2	27	54
115NE (Entry canopy, 54 ft2): Tradable Wattage				
LED: E: Downlight: Other:	1	1	27	27
115SW (Entry canopy, 54 ft2): Tradable Wattage				
LED: E: Downlight: Other:	1	1	27	27

A Fixture ID : Description / Lamp / Wattage Per Lamp / Ballast	B Lamps/ Fixture	C # of Fixture	D Fixture Watt.	E (C X D)
115NW (Entry canopy, 54 ft2): Tradable Wattage				
LED: E: Downlight: Other:	1	1	27	27
115SE (Entry canopy, 54 ft2): Tradable Wattage				
LED: E: Downlight: Other:	1	1	27	27
SW 3-Bays (Special feature area, 2371 ft2): Tradable Wattage				
LED: H: Wallpack: LED Other Fixture Unit 103W:	1	3	109	327
SE 3-Bays (Special feature area, 2371 ft2): Tradable Wattage				
LED: H: Wallpack: LED Other Fixture Unit 103W:	1	3	109	327
N 8-Bays (Special feature area, 6174 ft2): Tradable Wattage				
LED: H: Wallpack: LED Other Fixture Unit 103W:	1	9	109	981
Wrap around Main Entry (Walkway < 10 feet wide, 625 ft of walkway length): Tradable Wattage				
LED: K: Wallpack: LED Other Fixture Unit 40W:	1	6	40	240
			Total Tradable Proposed Watts =	2955

Exterior Lighting PASSES: Design 65% better than code

Exterior Lighting Compliance Statement

Compliance Statement: The proposed exterior lighting design represented in this document is consistent with the building plans, specifications, and other calculations submitted with this permit application. The proposed exterior lighting systems have been designed to meet the 2015 IECC requirements in COM*check* Version COMcheckWeb and to comply with any applicable mandatory requirements listed in the Inspection Checklist.

Name - Title Signature Date

COMcheck Software Version COMcheckWeb
Interior Lighting Compliance Certificate

Project Information

Energy Code: 2015 IECC
Project Title: East Fishkill DOT Pump House
Project Type: New Construction

Construction Site:
205 Lime Kiln Rd
East Fishkill, New York 12533

Owner/Agent:

Designer/Contractor:

Additional Efficiency Package(s)

Reduced interior lighting power. Requirements are implicitly enforced within interior lighting allowance calculations.

Allowed Interior Lighting Power

A Area Category	B Floor Area (ft2)	C Allowed Watts / ft2	D Allowed Watts
1-Pump Vault (Warehouse:Medium/Bulky/Pallet Material Storage)	315	0.52	164
		Total Allowed Watts =	164

Proposed Interior Lighting Power

A Fixture ID : Description / Lamp / Wattage Per Lamp / Ballast	B Lamps/ Fixture	C # of Fixture	D Fixture Watt.	E (C X D)
1-Pump Vault (Warehouse:Medium/Bulky/Pallet Material Storage)				
LED: L: Strip: LED Linear 20W:	1	3	33	99
			Total Proposed Watts =	99

Interior Lighting PASSES: Design 40% better than code

Interior Lighting Compliance Statement

Compliance Statement: The proposed interior lighting design represented in this document is consistent with the building plans, specifications, and other calculations submitted with this permit application. The proposed interior lighting systems have been designed to meet the 2015 IECC requirements in COM*check* Version COMcheckWeb and to comply with any applicable mandatory requirements listed in the Inspection Checklist.

Name - Title Signature Date

COMcheck Software Version COMcheckWeb
Exterior Lighting Compliance Certificate

Project Information

Energy Code: 2015 IECC
Project Title: East Fishkill DOT Pump House
Project Type: New Construction
Exterior Lighting Zone 4 (High activity metropolitan commercial district)

Construction Site:
205 Lime Kiln Rd
East Fishkill, New York 12533

Owner/Agent:

Designer/Contractor:

Allowed Exterior Lighting Power

A Area/Surface Category	B Quantity	C Allowed Watts /	D Tradable Wattage	E Allowed Watts (B X C)
Entry (Main entry)	6 ft of door	30	Yes	180
			Total Tradable Watts (a) =	180
			Total Allowed Watts =	180
			Total Allowed Supplemental Watts (b) =	1300

(a) Wattage tradeoffs are only allowed between tradable areas/surfaces.
(b) A supplemental allowance equal to 1300 watts may be applied toward compliance of both non-tradable and tradable areas/surfaces.

Proposed Exterior Lighting Power

A Fixture ID : Description / Lamp / Wattage Per Lamp / Ballast	B Lamps/ Fixture	C # of Fixture	D Fixture Watt.	E (C X D)
Entry (Main entry, 6 ft of door width): Tradable Wattage				
LED: K: Wallpack: LED Other Fixture Unit 40W:	1	1	40	40
			Total Tradable Proposed Watts =	40

Exterior Lighting PASSES: Design 97% better than code

Exterior Lighting Compliance Statement

Compliance Statement: The proposed exterior lighting design represented in this document is consistent with the building plans, specifications, and other calculations submitted with this permit application. The proposed exterior lighting systems have been designed to meet the 2015 IECC requirements in COM*check* Version COMcheckWeb and to comply with any applicable mandatory requirements listed in the Inspection Checklist.

Name - Title Signature Date

36x24 PLOT SHEET

NEW YORK STATE OF OPPORTUNITY. Office of General Services
DESIGN & CONSTRUCTION

CONSULTANT:

LaBella Powered by partnership.

MH PROFESSIONAL ENGINEERING, PLLC

WARNING:
THE ALTERATION OF THIS MATERIAL IN ANY WAY, UNLESS DONE UNDER THE DIRECTION OF A COMPARABLE PROFESSIONAL, I.E. ARCHITECT FOR AN ARCHITECT, ENGINEER FOR AN ENGINEER OR LANDSCAPE ARCHITECT FOR A LANDSCAPE ARCHITECT, IS A VIOLATION OF THE NEW YORK STATE EDUCATION LAW AND/OR REGULATIONS AND IS A CLASS 'A' MISDEMEANOR.

PROFESSIONAL ENGINEER MICHELLE M. HOUGHTALING 072116 STATE OF NEW YORK

CONTRACT: ELECTRICAL

TITLE: PROVIDE SUB-HEADQUARTERS BUILDING

LOCATION: DOT REGION 8, DUTCHESS COUNTY
205 LIME KILN RD.
EAST FISHKILL, NEW YORK 12533

CLIENT: NEW YORK STATE DEPARTMENT OF TRANSPORTATION

MARK	DATE	DESCRIPTION
	10/17/2019	BID DOCUMENTS

PROJECT NUMBER: 45552-E
DESIGNED BY: AH
DRAWN BY: JM
FIELD CHECK:
APPROVED: MH

SHEET TITLE: ELECTRICAL CODE COMPLIANCE

DRAWING NUMBER: E-406